TNC Crimp Jack

T6121B1-ND3G-223U-50

EAN: 5704717007417

Egnede kabler:
LMR200

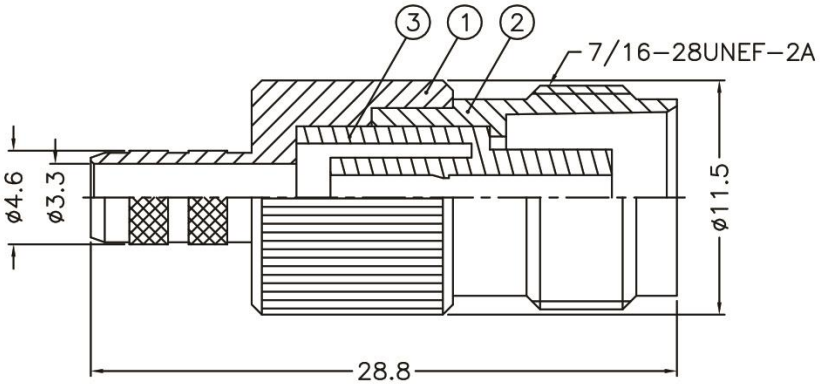

TNC female crimp for LMR200

7461LMR

REVISIONS		
ISS	ZONE	DESCRIPTION\PER REQUEST\DATE

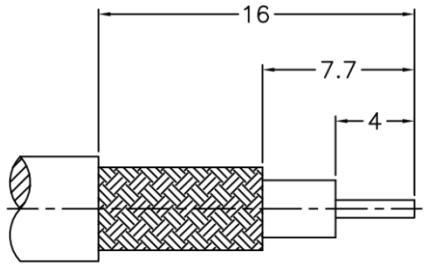

RECOMMENDED
CABLE STRIPPING DIM'S

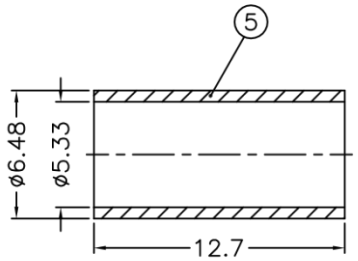

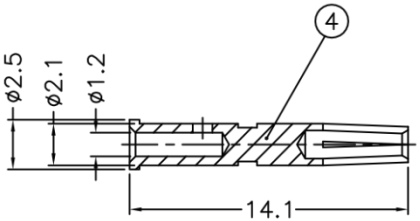

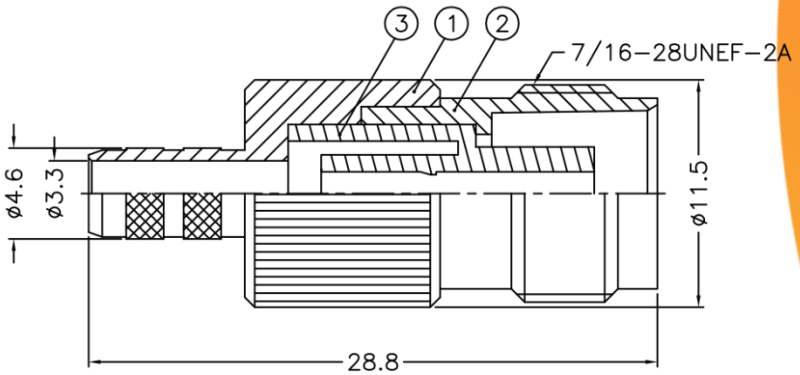

1. CRIMPED FERRULE
   HEX CRIMP SIZE .213"
2. CRIMPED CONTACT PIN
   HEX CRIMP SIZE .068"

NOTES: FINISH (PLATING THICKNESS IN MICRO–INCHES)
1. BRASS
2. NICKEL PL. 100 MIN. THICK OVER COPPER PL. 50 MIN. THICK
3. PHOSPHOR BRONZE
4. GOLD PL. 3 MIN. THICK OVER NICKEL PL. 50 MIN. THICK OVER COPPER PL. 50 MIN. THICK
5. DELRIN

RoHS COMPLIANT

NO.	DESCRIPTION	MATERIAL	FINISH	Q'TY	DRAWING NO.
5	FERRULE	COPPER	NOTE 2	1	FR–533–648 –127C
4	CONTACT PIN	NOTE 3	NOTE 4	1	900–6000–8–1.2
3	INSULATOR	NOTE 5	NATURAL	1	900–6000–3–50D
2	BODY	NOTE 1	NOTE 2	1	71628–6000–2
1	HOUSING	NOTE 1	NOTE 2	1	900–7000–1–08

DIMENSIONS ARE IN MILLIMETERS
UNLESS OTHERWISE SPECIFIED TOLERANCES
0.5–6 = ±0.2
6–30 = ±0.4
30–120 = ±0.6
120–315 = ±1
315–1000 = ±1.6
1000–2000 = ±2.4

SCALE 3/1 ISSUE A

PART NO.

APPROVED DATE 10–17–'14

CHECKED DATE 10–17–'14

DRAWN ANGELA DATE 10–17–'14

TITLE TNC CRIMP JACK (FOR LMR–200 CABLE)

DRAWING NO. 71628–6121B1–08–50D

FILE NO. R:\D\G\DWG\71628\6121B1\08\50D–1

DMTonline ApS • Kjeldgaardsvej 1 • DK-9300 Sæby • Tlf. +45 98461333 • info@dmtonline.dk • www.dmtonline.dk