RSMA1121A1-NT50G-9913-50

EAN: 5704717003617

SMA Reverse Polarity Crimp Plug

RSMA1121A1-NT50G-9913-50

Egnede kabler:
ECOFLEX10, LMR400

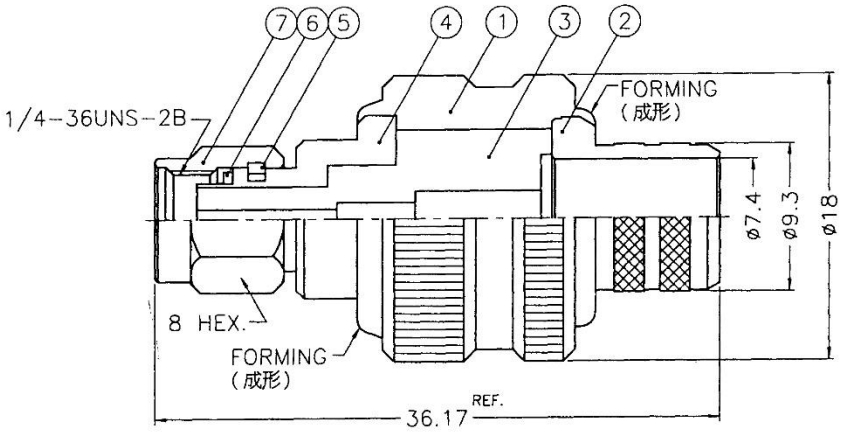

RPSMA male crimp for ECOFLEX10/LMR400

73701RPLMR

REVISIONS		
ISS	ZONE	DESCRIPTION\PER REQUEST\DATE
A1	A–B	TITLE WAS CHANGED\N/A\07–14–03'

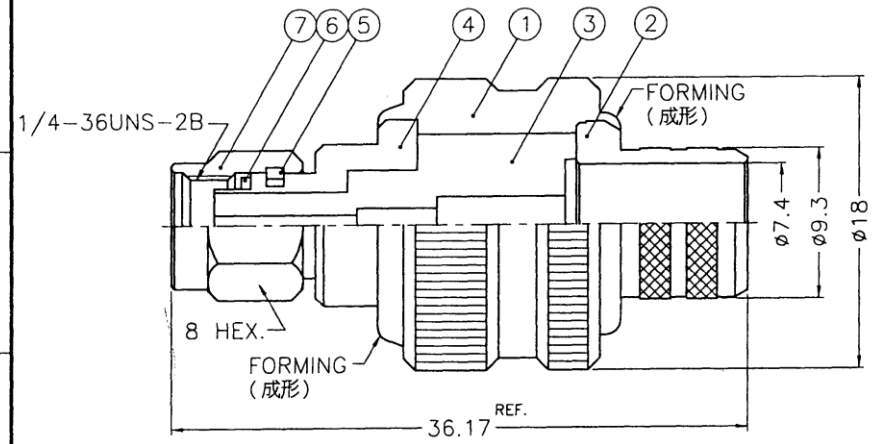

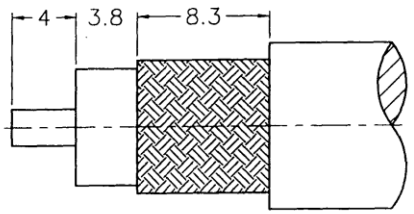

RECOMMENDED
CABLE STRIPPING DIM'S

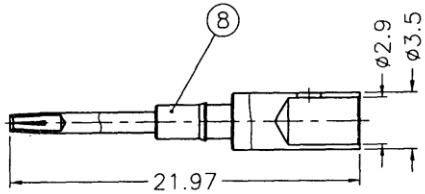

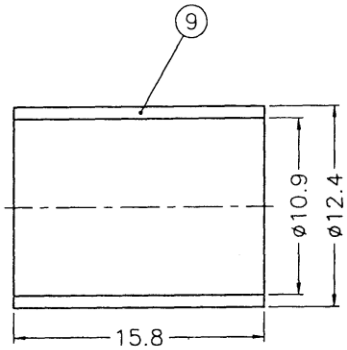

NOTES: FINISH (PLATING THICKNESS IN MICRO–INCHES)
1. BRASS PER QQ–B–626
2. NICKEL PL. 100 MIN. THICK OVER COPPER STRIKE
3. BERYLLIUM COPPER PER QQ–C–530
4. GOLD PL. 50 MIN. THICK OVER NICKEL PL. 100 MIN. THICK OVER COPPER STRIKE
5. TEFLON MIL–P–19468
6. JIS H 3250, C 2600

ISSUED 2003. 7. 16 I D

1. CRIMPED FERRULE HEX. CRIMP SIZE .429"
2. CRIMPED CONTACT PIN HEX. CRIMP SIZE .118"

NO.	DESCRIPTION	MATERIAL	FINISH	Q'TY	DRAWING NO.
9	FERRULE	NOTE 6	NOTE 2	1	FR–124/109X158
8	CONTACT PIN	NOTE 3	NOTE 4	1	RSMA1121A1–8–35/29
7	SHELL	NOTE 1	NOTE 2	1	SMA5000–1–C
6	GASKET	SILICONE	RED	1	GS–6/43X06
5	RETAINER RING	NOTE 3	NATURAL	1	SMA5000–4–B
4	BODY	NOTE 1	NOTE 2	1	NM–SMAM1–4
3	INSULATOR	NOTE 5	NATURAL	1	SMA1121A1–3T–50
2	BARREL	NOTE 1	NOTE 2	1	N5000–3–93/74–B
1	HOUSING	NOTE 1	NOTE 2	1	SMA1121A1–1

DIMENSIONS ARE IN MILLIMETERS

UNLESS OTHERWISE SPECIFIED TOLERANCES
0.5–6 = ±0.2
6–30 = ±0.4
30–120 = ±0.6
120–315 = ±1
315–1000 = ±1.6
1000–2000 = ±2.4

SCALE 2.5/1 | ISSUE A1

PART NO.

APPROVED — DATE 07–14–03'

CHECKED Ken — DATE 07–14–03'

DRAWN Ken — DATE 07–14–03'

FILE NO. F:\DWG\RSMA\1121A1\9913–50\NT50G–A1

Amphenol
Danbury,CT,USA–Tainan,Taiwan–Shenzhen,China

TITLE SMA REVERSE POLARITY CRIMP PLUG (FOR BELDEN 9913, 9914)

DRAWING NO. RSMA1121A1–NT50G–9913–50

ITEM NO. 611121AAA93NE5F

7RD-DR 18842

DMTonline ApS • Kjeldgaardsvej 1 • DK-9300 Sæby • Tlf. +45 98461333 • info@dmtonline.dk • www.dmtonline.dk