www.dmtonline.dk

SMA Crimp Plug

SMA1121A1-NT50G-9913-50

EAN: 5704717003594

Amphenol

SMA1121A1-NT50G-9913-50

Egnede kabler:
ECOFLEX10, LMR400

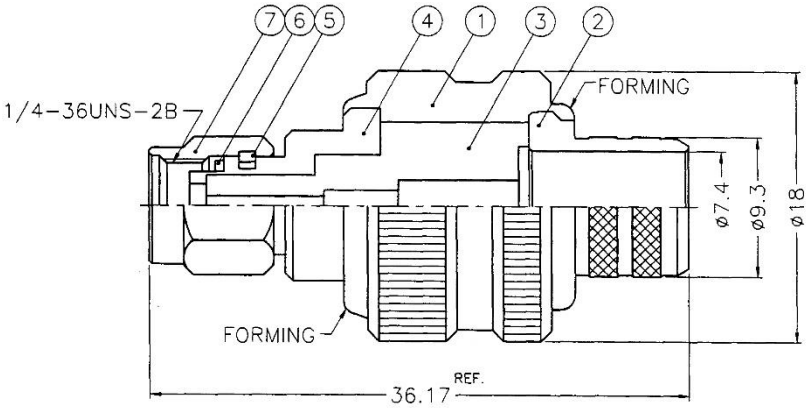

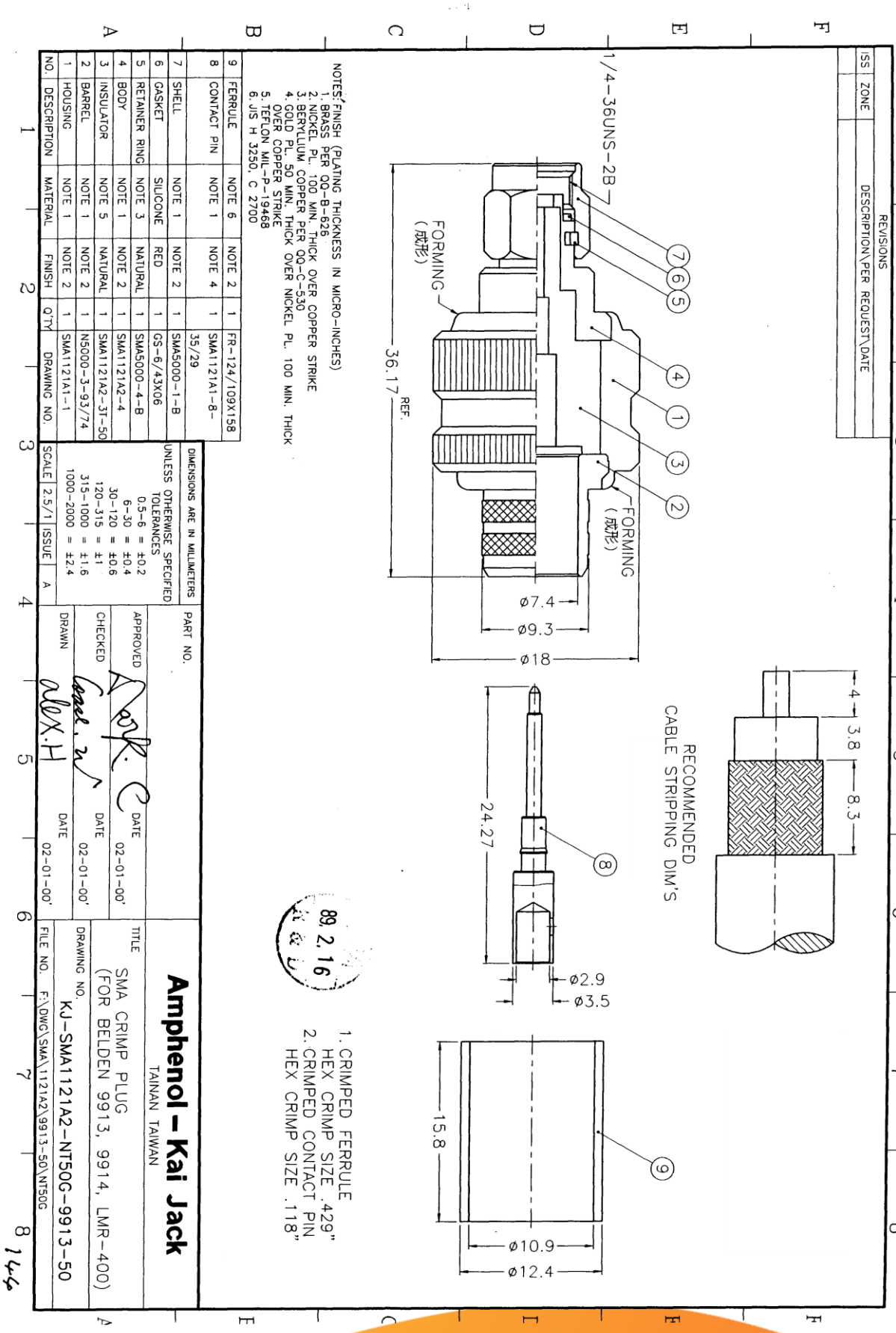
REVISIONS
ISS ZONE DESCRIPTION\PER REQUEST\DATE
1/4-36UNS-2B
FORMING (成形)
36.17 REF.
ø7.4
ø9.3
ø18
RECOMMENDED CABLE STRIPPING DIM'S
4 3.8 8.3
24.27
ø2.9
ø3.5
15.8
ø10.9
ø12.4
NOTES: FINISH (PLATING THICKNESS IN MICRO-INCHES)
1. BRASS PER QQ-B-626
2. NICKEL PL. 100 MIN. THICK OVER COPPER STRIKE
3. BERYLLIUM COPPER PER QQ-C-530
4. GOLD PL. 50 MIN. THICK OVER NICKEL PL. 100 MIN. THICK OVER COPPER STRIKE
5. TEFLON MIL-P-19468
6. JIS H 3250, C 2700
9 FERRULE NOTE 6 NOTE 2 1 FR-124/109X158
8 CONTACT PIN NOTE 1 NOTE 4 1 SMA1121A1-8-35/29
7 SHELL NOTE 1 NOTE 2 1 SMA5000-1-B
6 GASKET SILICONE RED 1 GS-6/43X06
5 RETAINER RING NOTE 3 NATURAL 1 SMA5000-4-B
4 BODY NOTE 1 NOTE 2 1 SMA1121A2-4
3 INSULATOR NOTE 5 NATURAL 1 SMA1121A2-3T-50
2 BARREL NOTE 1 NOTE 2 1 N5000-3-93/74
1 HOUSING NOTE 1 NOTE 2 1 SMA1121A1-1
NO. DESCRIPTION MATERIAL FINISH QTY DRAWING NO.
DIMENSIONS ARE IN MILLIMETERS
UNLESS OTHERWISE SPECIFIED TOLERANCES
0.5-6 = ±0.2
6-30 = ±0.4
30-120 = ±0.6
120-315 = ±1
315-1000 = ±1.6
1000-2000 = ±2.4
SCALE 2.5/1 ISSUE A
PART NO.
APPROVED DATE 02-01-00'
CHECKED DATE 02-01-00'
DRAWN DATE 02-01-00'
Amphenol - Kai Jack
TAINAN TAIWAN
TITLE SMA CRIMP PLUG (FOR BELDEN 9913, 9914, LMR-400)
DRAWING NO. KJ-SMA1121A2-NT50G-9913-50
FILE NO. F:\DWG\SMA\1121A2\9913-50\NT50G
1. CRIMPED FERRULE HEX CRIMP SIZE .429"
2. CRIMPED CONTACT PIN HEX CRIMP SIZE .118"
89. 2. 16