N Crimp Plug
N3100B-L200

JYEBAO
N3100B-L200

EAN: 5704717002115

Egnede kabler:
LMR200, FF200

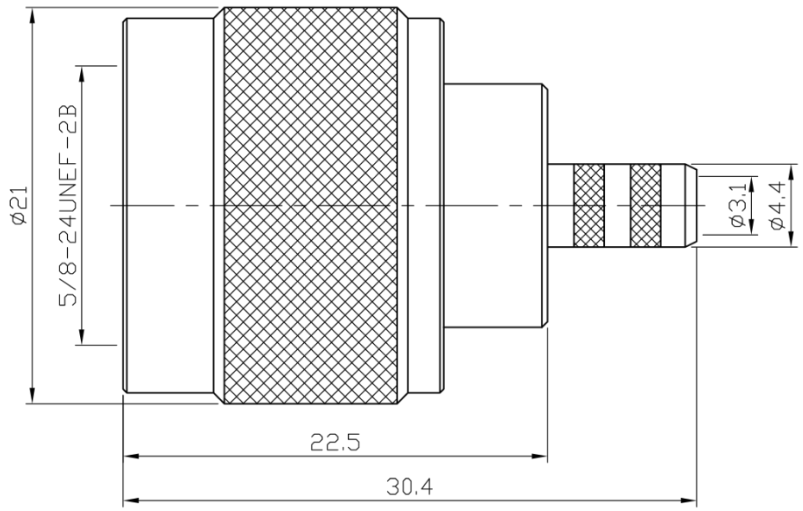

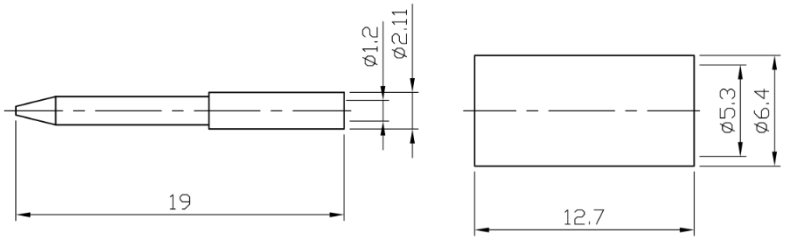

N male crimp for LMR200, FF200, Jyebao

7335LMR

REVISION			
REV.	DESCRIPTON	DATE	APPROVED
-	INITIAL RELEASE	2012/10/03	

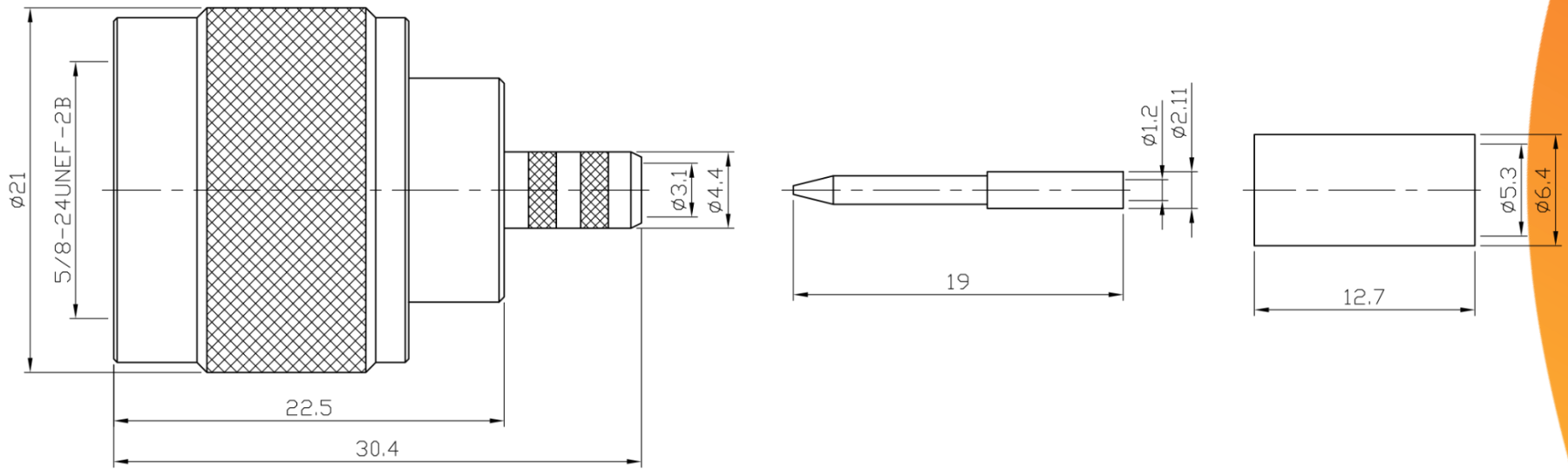

NOTES: FINISH (PLATING THICKNESS IN MICRO-INCHES)

1. BRASS.
2. TIN-ZINC-COPPER-ALLOY PL. 100 MIN. OVER COPPER PL. 50 MIN.
3. GOLD PL. 4 MIN. OVER NICKEL-PHOSPHORUS ALLOY PL. 80 MIN. OVER COPPER PL. 20 MIN.

NO.	DESCRIPTION	MATERIAL	FINISH	Q'TY	PART NO.
8	FERRULE	NOTE 1	NOTE 2	1	BNC3100-0058-9/W
7	CONTACT PIN	NOTE 1	NOTE 3	1	N3100-58-JBY200-7/NM
6	RETAINER RING	NOTE 1	NOTE 2	1	N3100-6/W
5	GASKET	SILICONE		1	N3100-5
4	INSULATOR	TEFLON		1	N3100-2112-4
3	CONTACT BODY	NOTE 1	NOTE 2	1	N3100B-4/W
2	BODY	NOTE 1	NOTE 2	1	N3100-0058-2/W
1	SHELL	NOTE 1	NOTE 2	1	N3100-1/W

DINENSION ARE MILLIMETERS
UNLESS OTHERWISE SPECIFIED TOLERANCES

0.5~ 5= ±0.05
5 ~10 = ±0.07
10~20 = ±0.10
20~30 = ±0.15
30~ = ±0.20

SCALE	REV	UNIT
3 / 1	-	MM

APPEROVE DATE
CHECKED DATE
DRAWN DATE

JYE BAO CO., LTD.
TAIPEI TAIWAN

TITLE: N CRIMP PLUG

DRAWING NO. N3100-0058-JBY200

DMTonline ApS • Kjeldgaardsvej 1 • DK-9300 Sæby • Tlf. +45 98461333 • info@dmtonline.dk • www.dmtonline.dk