Cold applied connection kit

This connection kit is designed for terminating all Raychem BTV, QTVR, XTV, KTV and VPL industrial parallel heating cables to a junction box, whilst maintaining electrical insulation of the heating cable conductors and core.

It is approved for use in hazardous areas. The core sealing boot does not require a heat gun or torch for the installation (no hot work permit necessary). The non-curing sealant (silicone free) allows easy installation and facilitates maintenance purposes.

Two grommets supplied in this kit enable the gland to maintain optimum sealing under various ambient conditions.
An additional locknut is provided for unthreaded entries.

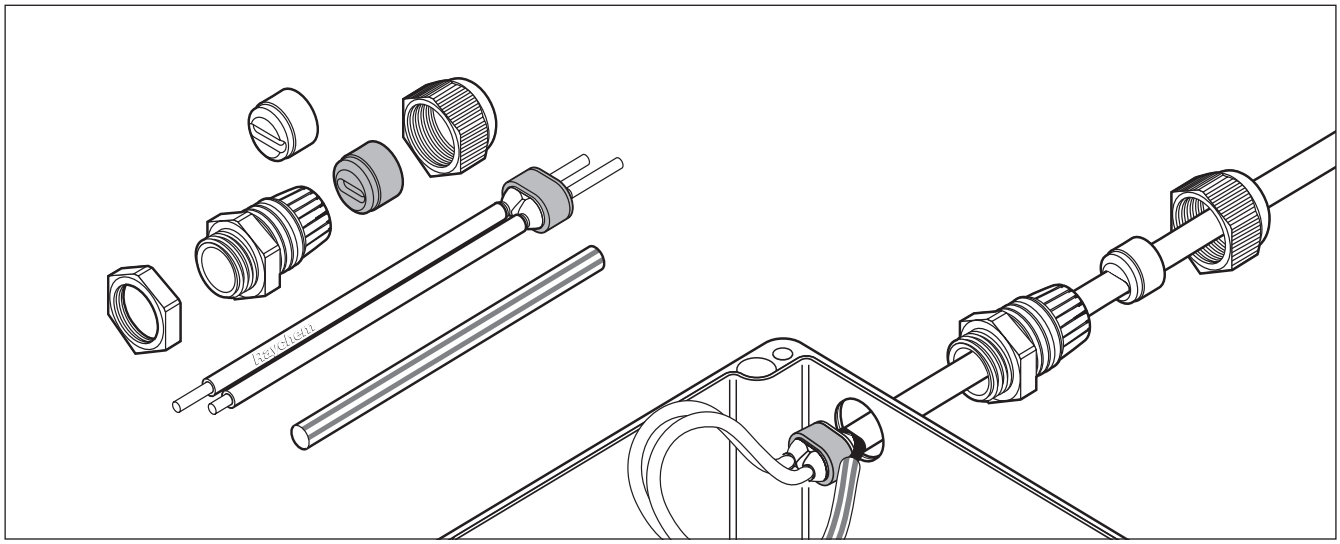

Application	Connection kit for BTV, QTVR, XTV, KTV and VPL parallel heating cables.
Kit contents	1 gland, 2 grommets, 1 locknut, 1 core sealer, 1 green/yellow tube, 1 installation instruction (multilingual)
Approvals	PTB 98 ATEX 1015 U Ex II 2 G/D EEx e II by PTB according to EN 50 014, EN 50 019 DNV Certificate No. E-6967 and E-6968

	C25-100
Product specification	
Area classification	Hazardous, Zone 1, Zone 2 (Gas), Zone 21, Zone 22 (Dust) Ordinary
Type	Cold applied
Thread size	M25 x 1.5
Min. ambient temperature	–50°C
Max. exposure temperature (gland)	110°C
Ordering details	
Part description	C25-100
PN (Weight)	263012-000 (70 g)