GEORG FISCHER
PIPING SYSTEMS

Datasheet Ball Valve Type 375

Advantages

- Manual operated valve for water and non-critical applications
- Ergonomic handle with integrated tool for dismounting the union bushing
- Easy radial installation and removal

Dimensions				
d16DN10 – d110DN100, 3/8" - 4"				
Materials			**Sealing materials**	
Valve body	PVC-U		**O-Ring**	EPDM, FPM
Lever	PPGF 30		**Ball sealing**	PTFE
Connection types			**Actuation**	
Sockets ISO, BS, ASTM/ANSI, JIS			Manual operated	
Threaded sockets ISO, BS, ASTM/ANSI			**Approvals**	
Butt fusion spigots long PE100 SDR11 ISO			DVGW, ACS, NSF51 NSF 61, WRAS, FDA, KTW, ÖNORM, KIWA	

kv 100-Values

DN mm	DN inch	d mm	kv 100 l/min (Δp = 1 psi)	Cv 100 US gal./min (Δp = 1 psi)	kv 100 m³/h (Δp = 1 bar)
10	⅜	16	70	4.9	4
15	½	20	185	12.9	11
20	¾	25	350	24.5	21
25	1	32	700	49.0	42
32	1 ¼	40	1000	70.0	60
40	1 ½	50	1600	112.0	96
50	2	63	3100	217.1	186
65	2 ½	75	5000	350.0	300
80	3	90	7000	490.0	420
100	4	110	11000	770.0	660
The kv values for each intermediate valve position can be determined using the flow value characteristics and the kv 100 values					

Design

1. Union nut	7. Handle
2. End connector	A. Face seal
3. Union brushing	B. Body seal
4. Ball	C. Backing seal
5. Union	D. Ball seal
6. Stem	E. Stem seal

P / T-Diagram

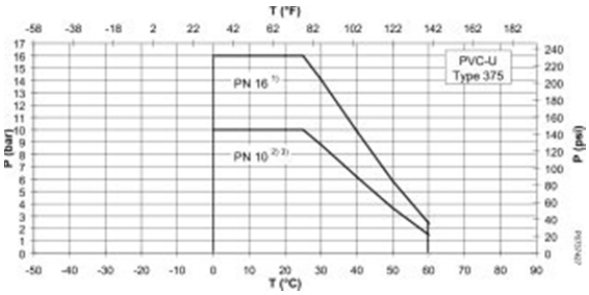

P: Permissible pressure in bar, psi, T: Temperature in °C, °F
1) For nominal dimensions of DN10 - DN50, the central body of the ball valve is designed for nominal pressure PN16
2) For nominal dimensions of DN65 - DN100, the central body of the ball valve is designed for nominal pressure PN10
3) Depending on the end connection, at nominal dimensions of DN10 - DN50, the nominal pressure reduces to PN10

The pressure temperature diagram is based on a lifetime of 25 years and the medium water or similar media.

Pressure loss diagram

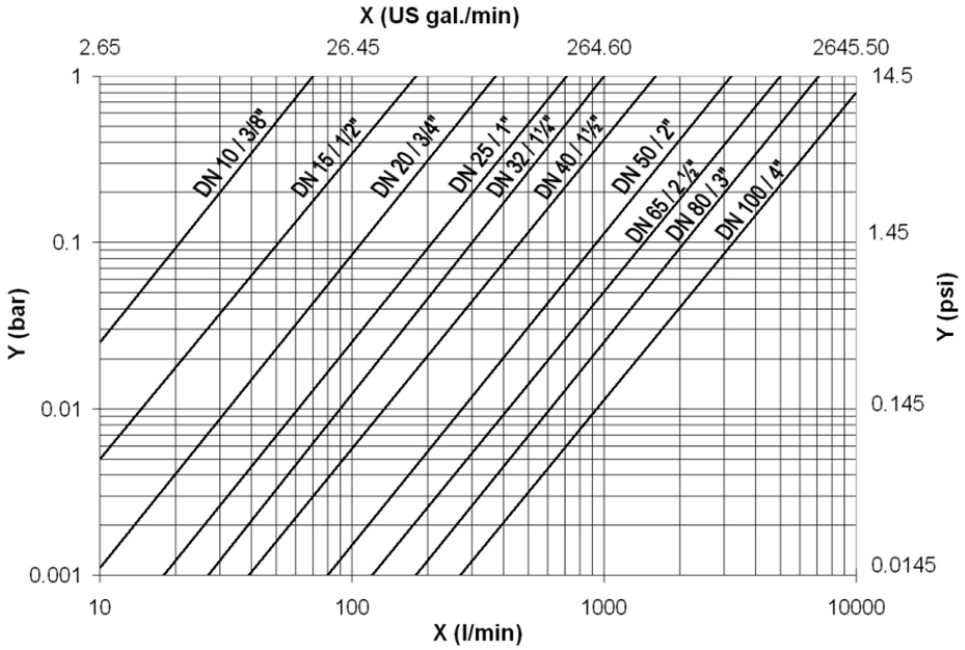

Flow characteristic

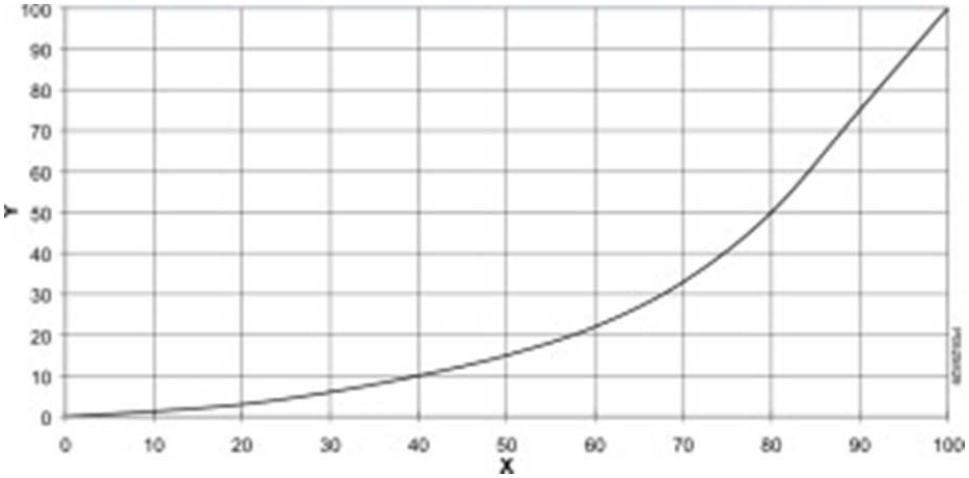

X Open angle (%) , Y Flow factor kv, cv (%)

Dimenions

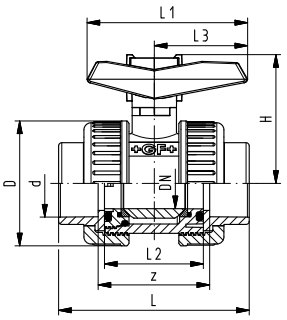

Solvent cement sockets metric									
d mm	DN mm	Zoll Inch	D mm	H mm	L mm	L1 mm	L2 mm	L3 mm	z mm
16	10	⅜	50	53	76	60	42	40	48
20	15	½	50	53	80	60	42	40	48
25	20	¾	59	60	91	65	48	45	53
32	25	1	68	67	102	75	54	51	58
40	32	1 ¼	80	79	120	85	62	59	68
50	40	1 ½	94	90	140	95	72	70	78
63	50	2	115	107	169	110	86	84	93
75	65	2 ½	145	129	206	130	110	103	118
90	80	3	168	143	242	140	128	120	140
110	100	4	210	169	282	160	150	141	160

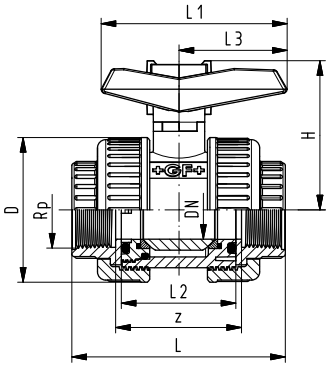

Threaded sockets Rp								
Zoll Inch	DN mm	D mm	H mm	L mm	L1 mm	L2 mm	L3 mm	z mm
⅜	10	50	53	76	60	42	40	48
½	15	50	53	80	60	42	40	48
¾	20	59	60	91	65	48	45	53
1	25	68	67	102	75	54	51	58
1 ¼	32	80	79	116	85	62	59	68
1 ½	40	94	90	126	95	72	70	78
2	50	115	107	149	110	86	84	93
2 ½	65	145	129	184	130	110	103	118
3	80	168	143	212	140	128	120	140
4	100	210	169	244	160	150	141	160

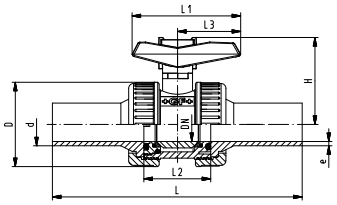

Butt fusion spigots long									
d mm	DN mm	Zoll Inch	D mm	H mm	L mm	L1 mm	L2 mm	L3 mm	e mm
20	15	½	95	53	175	60	42	40	1.8
25	20	¾	105	60	195	65	48	45	2.3
32	25	1	115	67	247	75	54	51	2.9
40	32	1 ¼	140	79	233	85	62	59	3.6
50	40	1 ½	150	90	265	95	72	70	4.5
63	50	2	165	107	278	110	86	84	5.7
75	65	2 ½	185	129	348	130	110	103	6.8
90	80	3	200	143	350	140	128	120	8.2
110	100	4	220	169	412	160	150	141	10

Specifications

All ball valves with metric sizes DN 10 - 100 mm, shall be manufactured with true double union design in accordance with EN ISO 16135. Seats shall be PTFE with backing rings creating self-adjusting seals and constant operating torque. Backing rings and seals shall be EPDM or FPM. The handle shall include in its design an integrated tool for removal of the union bush.

Planning Fundamentals

The following link connects you to the Georg Fischer Planning Fundamentals which help you as a detailed reference book by choosing an armature.
http://www.gfps.com/content/gfps/com/en/support_and_services/planning_assistance/planning_fundamentals.html?lang=en