REVISIONS			
REV.	DESCRIPTION	DATE	AUTHOR
1	Created according to measurement report per 06-01-2004	10-01-2005	KPE
2	Comments added.	15-11-2005	KPE
3	New 8 cavity mould. Drawing according to measurement report per 29-05-2006.	29-05-2006	KPE
4	Part number changed from 410087 to NA0651A-AA - tolerances added.	22-11-2007	TGJ
5	Drawing is according to measurement report per 19-03-2009.	30-06-2009	KV
6	Part weight adjusted from 8,7g to 8,1g. Drawing is acc. to measurement report per 02-09-2011.	06-09-2011	KV
7	Letters E and G removed. Beloning tolerances removed to. Number put into brackets. "Part Weight" put into brackets.	24-05-2013	KV
8	Part Weight adjusted from 8,1 to 7,9 g.	28-01-2016	KV
9	Note regarding vent hole added.	03-06-2016	KV
10	Vent hole shown on the drawing.	20-06-2016	KV

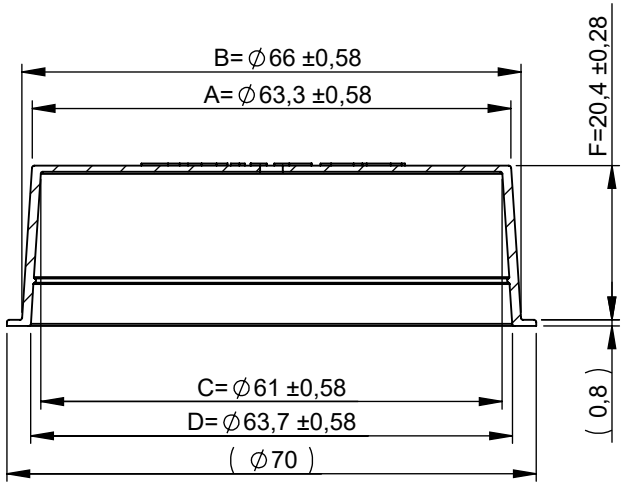

SECTION A-A

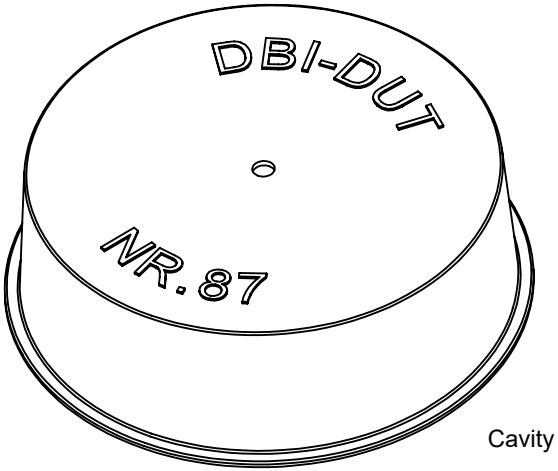

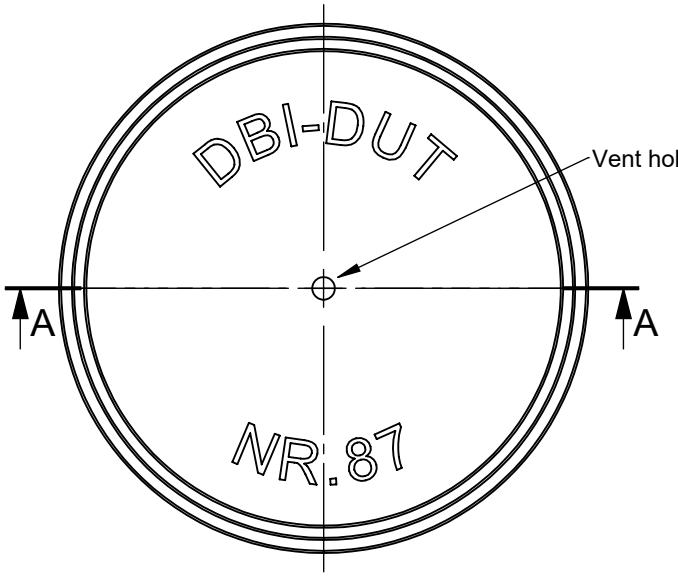

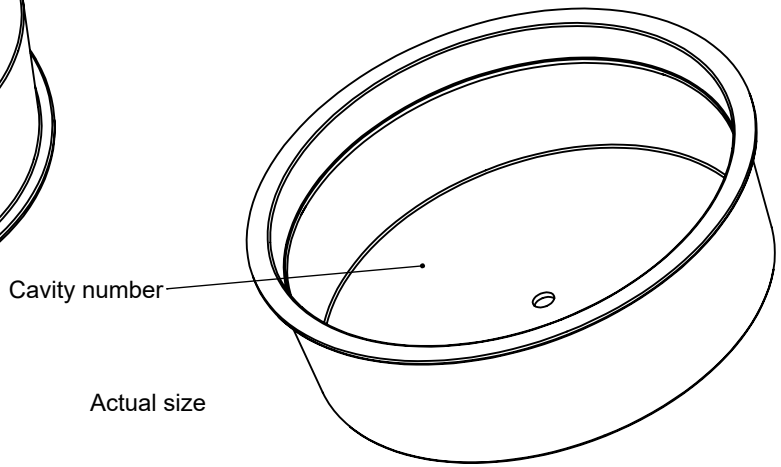

Actual size

Comments:
Drawing is according to
the latest measurement report.

Comments:
Drawing is valid for cap
NA0651D-AA - with vent hole and
NA0651A-AA - without vent hole.
Diameter of vent hole is 3mm. The
vent hole is placed in the center.

Sheet:	Scale:	DBI A/S Project No:	Drawing:
A4	1:1	02529	NA0651A-AA
Material: PE-LD		Colour: All	DBI A/S Product No: NA0651A-AA
Part Weight: (7,9) g		Part Surface Area: 155,01 cm²	Product Name: Conical cap 0651

DBI plastics
Protect your business

Dimensions are given in mm. Dimensions without tolerances according to DS 812 / DIN16901

This drawing belongs to DBI Plastics A/S and may not be used or shown without permission.

13-07-2019