OMRON

Machine Automation Controller

NX-series

NX502 CPU Unit

Hardware User's Manual

NX502-1□00

CPU Unit

SYSMAC
always in control

W629-E1-02

NOTE

1. All rights reserved. No part of this publication may be reproduced, stored in a retrieval system, or transmitted, in any form, or by any means, mechanical, electronic, photocopying, recording, or otherwise, without the prior written permission of OMRON.
2. No patent liability is assumed with respect to the use of the information contained herein.
Moreover, because OMRON is constantly striving to improve its high-quality products, the information contained in this manual is subject to change without notice.
3. Every precaution has been taken in the preparation of this manual. Nevertheless, OMRON assumes no responsibility for errors or omissions.
Neither is any liability assumed for damages resulting from the use of the information contained in this publication.

Trademarks

• Sysmac and SYSMAC are trademarks or registered trademarks of OMRON Corporation in Japan and other countries for OMRON factory automation products.
• Microsoft, Windows, Excel, Visual Basic, and Microsoft Edge are either registered trademarks or trademarks of Microsoft Corporation in the United States and other countries.
• EtherCAT® is registered trademark and patented technology, licensed by Beckhoff Automation GmbH, Germany.
• ODVA, CIP, CompoNet, DeviceNet, and EtherNet/IP are trademarks of ODVA.
• The SD and SDHC logos are trademarks of SD-3C, LLC.

Other company names and product names in this document are the trademarks or registered trademarks of their respective companies.

Copyrights

• Microsoft product screen shots used with permission from Microsoft.
• This product incorporates certain third party software. The license and copyright information associated with this software is available at http://www.fa.omron.co.jp/nj_info_e/.

Introduction

Thank you for purchasing an NX-series CPU Unit.
This manual contains information that is necessary to use the NX-series CPU Unit. Please read this manual and make sure you understand the functionality and performance of the NX-series CPU Unit before you attempt to use it in a control system.
Keep this manual in a safe place where it will be available for reference during operation.

Intended Audience

This manual is intended for the following personnel, who must also have knowledge of electrical systems (an electrical engineer or the equivalent).

- Personnel in charge of introducing FA systems.
- Personnel in charge of designing FA systems.
- Personnel in charge of installing and maintaining FA systems.
- Personnel in charge of managing FA systems and facilities.

For programming, this manual is intended for personnel who understand the programming language specifications in international standard IEC 61131-3 or Japanese standard JIS B 3503.

Applicable Products

This manual covers the following products.

- NX-series CPU Units
  NX502-1□00

Part of the specifications and restrictions for the CPU Units are given in other manuals. Refer to *Relevant Manuals* on page 2 and *Related Manuals* on page 42.

Relevant Manuals

The following table provides the relevant manuals for the NX-series CPU Units. Read all of the manuals that are relevant to your system configuration and application before you use the NX-series CPU Unit.
Most operations are performed from the Sysmac Studio Automation Software. Refer to the *Sysmac Studio Version 1 Operation Manual (Cat. No. W504)* for information on the Sysmac Studio.

Purpose of use	Manual												
	Basic information												
	NX-series NX502 CPU Unit Hardware User's Manual	NJ/NX-series CPU Unit Software User's Manual	NJ/NX-series Instructions Reference Manual	NJ/NX-series Motion Control User's Manual	NJ/NX-series CPU Unit Motion Control Instructions Reference Manual	NJ/NX-series CPU Unit Built-in EtherCAT Port User's Manual	NJ/NX-series CPU Unit Built-in EtherNet/IP Port User's Manual	NJ/NX-series CPU Unit EtherNet/IP Unit User's Manual	NX-series OPC UA User's Manual	NJ/NX-series CPU Unit FINS Function User's Manual	NX-series CPU Unit User's Manual	NJ/NX-series Database Connection CPU Units Automation Playback User's Manual	NX-series CPU Unit Troubleshooting Manual	NJ/NX-series
Introduction to NX502 CPU Units	●												
Setting devices and hardware	●												
Using motion control				●									
Using EtherCAT						●							
Using EtherNet/IP							●	●					
Software settings		●											
Using motion control				●									
Using EtherCAT						●							
Using EtherNet/IP							●	●					
Using OPC UA									●				
Using FINS										●			
Using the database connection service											●		
Using automation playback												●	

Purpose of use	Manual												
	Basic information												
	Hardware User's Manual	NX-series NX502 CPU Unit	Software User's Manual	NJ/NX-series CPU Unit	Instructions Reference Manual	NJ/NX-series	Motion Control User's Manual	NJ/NX-series CPU Unit	Motion Control Instructions Reference Manual	NJ/NX-series	Built-in EtherCAT Port User´s Manual	NJ/NX-series CPU Unit	Built-in EtherNet/IP Port User's Manual
Writing the user program													
Using motion control							●		●				
Using EtherCAT											●		
Using EtherNet/IP													●
Using OPC UA				●		●							
Using FINS													
Using the database connection service													
Using automation playback													
Programming error processing													
Testing operation and debugging													
Using motion control							●						
Using EtherCAT											●		
Using EtherNet/IP													●
Using OPC UA				●									
Using FINS													
Using the database connection service													
Using automation playback													
Learning about error management and corrections*1													
Maintenance													
Using motion control							●						
Using EtherCAT											●		
Using EtherNet/IP													●

Purpose of use	Manual												
	EtherNet/IP Unit User's Manual	NX-series	OPC UA User's Manual	NJ/NX-series CPU Unit	FINS Function User's Manual	NX-series CPU Unit	User's Manual	NJ/NX-series Database Connection CPU Units	Automation Playback User's Manual	NX-series CPU Unit	Troubleshooting Manual	NJ/NX-series
Writing the user program												
Using motion control												
Using EtherCAT												
Using EtherNet/IP	●											
Using OPC UA			●									
Using FINS					●							
Using the database connection service								●				
Using automation playback									●			
Programming error processing												●
Testing operation and debugging												
Using motion control												
Using EtherCAT												
Using EtherNet/IP	●											
Using OPC UA			●									
Using FINS					●							
Using the database connection service								●				
Using automation playback									●			
Learning about error management and corrections*1			△		△		△		△			●
Maintenance												
Using motion control												
Using EtherCAT												
Using EtherNet/IP	●											

*1. Refer to the *NJ/NX-series Troubleshooting Manual (Cat. No. W503)* for the error management concepts and the error items. However, refer to the manuals that are indicated with triangles (△) for details on errors corresponding to the products with the manuals that are indicated with triangles (△).

Manual Structure

Page Structure

The following page structure is used in this manual.

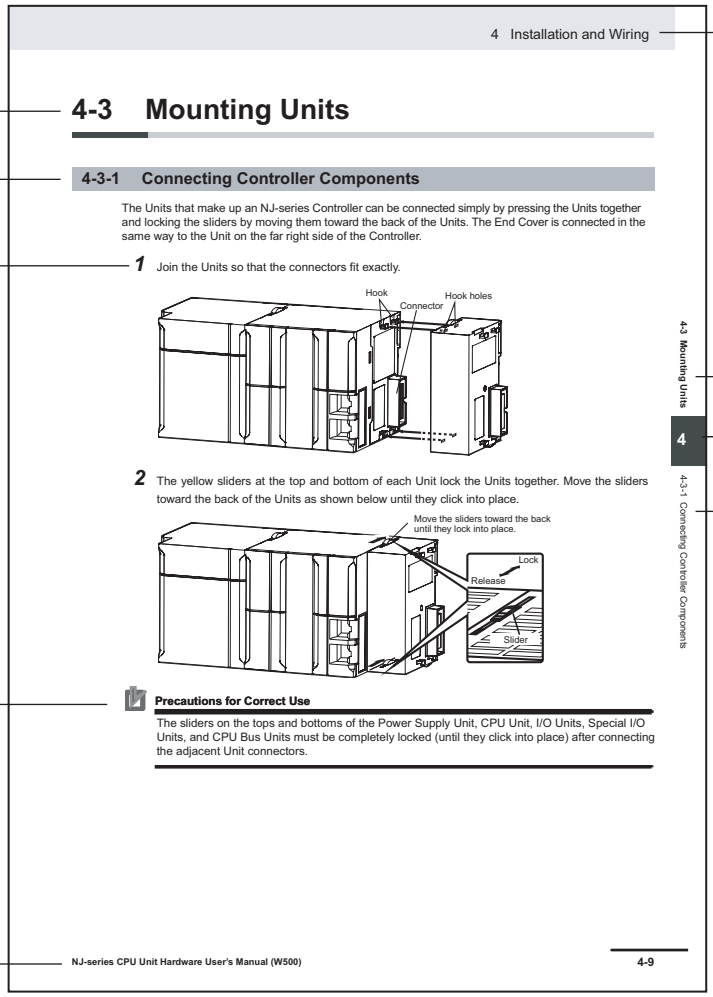

Note This illustration is provided only as a sample. It may not literally appear in this manual.

Special Information

Special information in this manual is classified as follows:

Precautions for Safe Use

Precautions on what to do and what not to do to ensure safe usage of the product.

Precautions for Correct Use

Precautions on what to do and what not to do to ensure proper operation and performance.

Additional Information

Additional information to read as required.
This information is provided to increase understanding or make operation easier.

Version Information

Information on differences in specifications and functionality for CPU Units with different unit versions and for different versions of the Sysmac Studio is given.

Precaution on Terminology

In this manual, "download" refers to transferring data from the Sysmac Studio to the physical Controller and "upload" refers to transferring data from the physical Controller to the Sysmac Studio.
For the Sysmac Studio, "synchronization" is used to both "upload" and "download" data. Here, "synchronize" means to automatically compare the data for the Sysmac Studio on the computer with the data in the physical Controller and transfer the data in the direction that is specified by the user.

Sections in this Manual

1 Introduction to NX-series Controllers

2 System Configuration

3 Configuration Units

4 Designing the Power Supply System

5 Installation and Wiring

6 Troubleshooting

7 Inspection and Maintenance

A Appendices

I Index

CONTENTS

Introduction **1**
Intended Audience 1
Applicable Products 1

Relevant Manuals **2**

Manual Structure **4**
Page Structure 4
Special Information 5
Precaution on Terminology 5

Sections in this Manual **7**

Terms and Conditions Agreement **12**
Warranty, Limitations of Liability 12
Application Considerations 13
Disclaimers 13
Statement of security responsibilities for assumed use cases and against threats 14

Safety Precautions **15**
Definition of Precautionary Information 15
Symbols 15
WARNING 16
Cautions 19

Precautions for Safe Use **21**

Precautions for Correct Use **32**

Regulations and Standards **37**
Conformance to EMC and Electrical Safety Regulations 37
Conformance to UL and CSA Standards 37
Conformance to KC Certification 38
Software Licenses and Copyrights 38

Versions **39**
Checking Versions 39
Unit Versions of CPU Units and Sysmac Studio Versions 41

Related Manuals **42**

Terminology **45**

Revision History **50**

Section 1 Introduction to NX-series Controllers

1-1 The NX-series Controller **1-2**
1-1-1 Features 1-3
1-1-2 Introduction to the System Configurations 1-6

1-2 Specifications **1-10**

1-3 Overall Operating Procedure for the CPU Unit **1-15**

1-3-1 Overall Procedure 1-15
1-3-2 Procedure Details....1-16

Section 2 System Configuration

2-1 Basic System Configuration 2-2
2-1-1 EtherCAT Network Configuration 2-3
2-1-2 NX Unit Configuration 2-4
2-1-3 X Bus Unit Configuration....2-5
2-2 Connecting to the Sysmac Studio....2-8
2-3 Network Configuration 2-9

Section 3 Configuration Units

3-1 CPU Units 3-2
3-1-1 Models and Specifications 3-2
3-1-2 Part Names and Functions....3-4
3-1-3 DIP Switch....3-5
3-1-4 Operation Status Indicators....3-6
3-1-5 Terminal Blocks 3-9
3-1-6 Battery....3-10
3-1-7 ID Information Indication 3-12
3-2 SD Memory Cards 3-13
3-2-1 Models and Specifications 3-13
3-2-2 Purpose....3-13
3-3 Power Supply-related Units 3-14
3-4 NX Units....3-15
3-5 X Bus Units....3-16
3-6 Sysmac Studio 3-17
3-6-1 Model Numbers....3-17
3-6-2 Connection 3-17

Section 4 Designing the Power Supply System

4-1 Power Supply System 4-2
4-1-1 Unit Power Supply and I/O Power Supply....4-2
4-1-2 NX-series Power Supply-related Units....4-4
4-1-3 X Bus Unit Power Supply 4-9
4-2 Designing the NX Unit Power Supply System....4-11
4-2-1 Procedure for Designing the NX Unit Power Supply System....4-11
4-2-2 Calculation Example for the NX Unit Power Supply....4-12
4-3 Designing the I/O Power Supply System....4-14
4-3-1 I/O Power Supply Method 4-14
4-3-2 Designing the I/O Power Supply from the NX Bus....4-15
4-3-3 Designing the I/O Power Supply from External Sources....4-20
4-3-4 Restrictions on Inrush Current for ON/OFF Operation....4-20
4-4 Selecting External Power Supplies and Protective Devices....4-22
4-4-1 Selecting the Unit Power Supply....4-22
4-4-2 Selecting the I/O Power Supplies....4-24
4-4-3 Selecting Protective Devices....4-25

Section 5 Installation and Wiring

5-1 Processing at Power ON and Power OFF 5-2
5-1-1 Power ON Operation 5-2
5-1-2 Power OFF Operation 5-3
5-1-3 Resetting the Controller from the Sysmac Studio 5-5

5-2 Fail-safe Circuits 5-6

5-3 Mounting and Removing Units 5-8
5-3-1 Installation in a Control Panel 5-8
5-3-2 Preparations for Installation 5-12
5-3-3 Installing the CPU Unit 5-14
5-3-4 Attaching Markers 5-17
5-3-5 Installing and Connecting NX Units 5-18
5-3-6 Installing and Connecting X Bus Units 5-21
5-3-7 Mounting the End Cover 5-22
5-3-8 Mounting the End Plates 5-23
5-3-9 Installing and Removing the SD Memory Card 5-24
5-3-10 Battery Installation 5-27
5-3-11 Removing CPU Unit 5-29
5-3-12 Removing NX Units 5-30
5-3-13 Removing X Bus Units 5-31
5-3-14 Assembled Appearance and Dimensions 5-32

5-4 Wiring 5-36
5-4-1 Wiring the Unit Power Supply 5-36
5-4-2 Wiring the Additional NX Unit Power Supply Unit 5-37
5-4-3 Wiring the Additional I/O Power Supply Unit 5-37
5-4-4 Wiring the Protective Devices 5-37
5-4-5 Grounding 5-37
5-4-6 Wiring the Built-in EtherCAT Port 5-41
5-4-7 Wiring the Built-in EtherNet/IP Port 5-41
5-4-8 Wiring to the CPU Unit Terminal Block 5-42

5-5 Control Panel Installation 5-57
5-5-1 Temperature 5-57
5-5-2 Humidity 5-58
5-5-3 Vibration and Shock 5-59
5-5-4 Atmosphere 5-59
5-5-5 Electrical Environment 5-59
5-5-6 Grounding 5-64

Section 6 Troubleshooting

6-1 Overview of Troubleshooting 6-2

Section 7 Inspection and Maintenance

7-1 Cleaning and Maintenance 7-2
7-1-1 Cleaning 7-2
7-1-2 Periodic Inspections 7-3
7-1-3 Unit Replacement Precautions 7-4

7-2 Replacing the Battery 7-6

Appendices

A-1 Specifications A-2

A-2 Dimensions A-3

A-2-1 NX-series NX502 CPU Unit A-3
A-2-2 End Cover A-4
A-2-3 SD Memory Card A-4

A-3 List of Terminal Block Models A-5
A-3-1 Model Notation A-5
A-3-2 List of Terminal Block Models A-5

A-4 Version Information A-7

A-5 Support Functions of the CPU Units and Restrictions on the NX Units A-8

Index

Terms and Conditions Agreement

Warranty, Limitations of Liability

Warranties

- **Exclusive Warranty**

  Omron's exclusive warranty is that the Products will be free from defects in materials and workmanship for a period of twelve months from the date of sale by Omron (or such other period expressed in writing by Omron). Omron disclaims all other warranties, express or implied.

- **Limitations**

  OMRON MAKES NO WARRANTY OR REPRESENTATION, EXPRESS OR IMPLIED, ABOUT NON-INFRINGEMENT, MERCHANTABILITY OR FITNESS FOR A PARTICULAR PURPOSE OF THE PRODUCTS. BUYER ACKNOWLEDGES THAT IT ALONE HAS DETERMINED THAT THE PRODUCTS WILL SUITABLY MEET THE REQUIREMENTS OF THEIR INTENDED USE.

  Omron further disclaims all warranties and responsibility of any type for claims or expenses based on infringement by the Products or otherwise of any intellectual property right.

- **Buyer Remedy**

  Omron's sole obligation hereunder shall be, at Omron's election, to (i) replace (in the form originally shipped with Buyer responsible for labor charges for removal or replacement thereof) the non-complying Product, (ii) repair the non-complying Product, or (iii) repay or credit Buyer an amount equal to the purchase price of the non-complying Product; provided that in no event shall Omron be responsible for warranty, repair, indemnity or any other claims or expenses regarding the Products unless Omron's analysis confirms that the Products were properly handled, stored, installed and maintained and not subject to contamination, abuse, misuse or inappropriate modification. Return of any Products by Buyer must be approved in writing by Omron before shipment. Omron Companies shall not be liable for the suitability or unsuitability or the results from the use of Products in combination with any electrical or electronic components, circuits, system assemblies or any other materials or substances or environments. Any advice, recommendations or information given orally or in writing, are not to be construed as an amendment or addition to the above warranty.

  See http://www.omron.com/global/ or contact your Omron representative for published information.

Limitation on Liability; Etc

OMRON COMPANIES SHALL NOT BE LIABLE FOR SPECIAL, INDIRECT, INCIDENTAL, OR CONSEQUENTIAL DAMAGES, LOSS OF PROFITS OR PRODUCTION OR COMMERCIAL LOSS IN ANY

WAY CONNECTED WITH THE PRODUCTS, WHETHER SUCH CLAIM IS BASED IN CONTRACT, WARRANTY, NEGLIGENCE OR STRICT LIABILITY.

Further, in no event shall liability of Omron Companies exceed the individual price of the Product on which liability is asserted.

Application Considerations

Suitability of Use

Omron Companies shall not be responsible for conformity with any standards, codes or regulations which apply to the combination of the Product in the Buyer's application or use of the Product. At Buyer's request, Omron will provide applicable third party certification documents identifying ratings and limitations of use which apply to the Product. This information by itself is not sufficient for a complete determination of the suitability of the Product in combination with the end product, machine, system, or other application or use. Buyer shall be solely responsible for determining appropriateness of the particular Product with respect to Buyer's application, product or system. Buyer shall take application responsibility in all cases.

NEVER USE THE PRODUCT FOR AN APPLICATION INVOLVING SERIOUS RISK TO LIFE OR PROPERTY OR IN LARGE QUANTITIES WITHOUT ENSURING THAT THE SYSTEM AS A WHOLE HAS BEEN DESIGNED TO ADDRESS THE RISKS, AND THAT THE OMRON PRODUCT(S) IS PROPERLY RATED AND INSTALLED FOR THE INTENDED USE WITHIN THE OVERALL EQUIPMENT OR SYSTEM.

Programmable Products

Omron Companies shall not be responsible for the user's programming of a programmable Product, or any consequence thereof.

Disclaimers

Performance Data

Data presented in Omron Company websites, catalogs and other materials is provided as a guide for the user in determining suitability and does not constitute a warranty. It may represent the result of Omron's test conditions, and the user must correlate it to actual application requirements. Actual performance is subject to the Omron's Warranty and Limitations of Liability.

Change in Specifications

Product specifications and accessories may be changed at any time based on improvements and other reasons. It is our practice to change part numbers when published ratings or features are changed, or when significant construction changes are made. However, some specifications of the Product may

be changed without any notice. When in doubt, special part numbers may be assigned to fix or establish key specifications for your application. Please consult with your Omron's representative at any time to confirm actual specifications of purchased Product.

Errors and Omissions

Information presented by Omron Companies has been checked and is believed to be accurate; however, no responsibility is assumed for clerical, typographical or proofreading errors or omissions.

Statement of security responsibilities for assumed use cases and against threats

OMRON SHALL NOT BE RESPONSIBLE AND/OR LIABLE FOR ANY LOSS, DAMAGE, OR EXPENSES DIRECTLY OR INDIRECTLY RESULTING FROM THE INFECTION OF OMRON PRODUCTS, ANY SOFTWARE INSTALLED THEREON OR ANY COMPUTER EQUIPMENT, COMPUTER PROGRAMS, NETWORKS, DATABASES OR OTHER PROPRIETARY MATERIAL CONNECTED THERETO BY DISTRIBUTED DENIAL OF SERVICE ATTACK, COMPUTER VIRUSES, OTHER TECHNOLOGICALLY HARMFUL MATERIAL AND/OR UNAUTHORIZED ACCESS.

It shall be the users sole responsibility to determine and use adequate measures and checkpoints to satisfy the users particular requirements for (i) antivirus protection, (ii) data input and output, (iii) maintaining a means for reconstruction of lost data, (iv) preventing Omron Products and/or software installed thereon from being infected with computer viruses and (v) protecting Omron Products from unauthorized access.

Safety Precautions

Definition of Precautionary Information

The following notation is used in this manual to provide precautions required to ensure safe usage of the NX-series CPU Unit.
The safety precautions that are provided are extremely important for safety. Always read and heed the information provided in all safety precautions.
The following notation is used.

WARNING	Indicates a potentially hazardous situation which, if not avoided, could result in death or serious injury. Additionally, there may be severe property damage.
Caution	Indicates a potentially hazardous situation which, if not avoided, may result in minor or moderate injury, or property damage.

Symbols

	The circle and slash symbol indicates operations that you must not do. The specific operation is shown in the circle and explained in text. This example indicates prohibiting disassembly.
	The triangle symbol indicates precautions (including warnings). The specific operation is shown in the triangle and explained in text. This example indicates a precaution for electric shock.
	The triangle symbol indicates precautions (including warnings). The specific operation is shown in the triangle and explained in text. This example indicates a general precaution.
	The filled circle symbol indicates operations that you must do. The specific operation is shown in the circle and explained in text. This example shows a general precaution for something that you must do.
	The triangle symbol indicates precautions (including warnings). The specific operation is shown in the triangle and explained in text. This example indicates a precaution for high temperatures.

WARNING

⚠ WARNING

During Power Supply

Do not touch any of the terminals or terminal blocks while the power is being supplied. Doing so may result in electric shock.

Do not attempt to take any Unit apart.
In particular, high-voltage parts are present in the Power Supply Unit while power is supplied or immediately after power is turned OFF. Touching any of these parts may result in electric shock. There are sharp parts inside the Unit that may cause injury.

Fail-safe Measures

Provide safety measures in external circuits to ensure safety in the system if an abnormality occurs due to malfunction of the CPU Unit, slaves, or Units or due to other external factors affecting operation. Not doing so may result in serious accidents due to incorrect operation.

Emergency stop circuits, interlock circuits, limit circuits, and similar safety measures must be provided in external control circuits.

The Controller outputs may remain ON or OFF due to deposition or burning of the output relays or destruction of the output transistors. As a countermeasure for such problems, external safety measures must be provided to ensure safe operation of the system.

The CPU Unit will turn OFF digital outputs on the CPU Rack in the following cases.
- While the CPU Unit is on standby until RUN mode is entered after the power is turned ON
- If an error occurs in the power supply
- If a system initialization error occurs

Digital outputs on the CPU Rack will produce outputs according to the settings in the following cases.
- If a CPU Unit error or CPU Unit reset occurs
- If a major fault level Controller error occurs

External safety measures must be provided to ensure safe operation of the system in such cases.

If there is interference in remote I/O communications or if a major fault level error occurs, output status will depend on the products that are used.
Confirm the operation that will occur when there is interference in communications or a major fault level error, and implement safety measures.
Correctly set all of the settings in the slaves and Units.

If external power supplies for Units, slaves or other devices are overloaded or short-circuited, the voltage will drop, outputs will turn OFF, and the system may be unable to read inputs. Provide external safety measures in controls with monitoring of external power supply voltage as required so that the system operates safely in such a case.

Unintended outputs may occur when an error occurs in variable memory. As a countermeasure for such problems, external safety measures must be provided to ensure safe operation of the system.

Provide measures in the communications system and user program to ensure safety in the overall system even if errors or malfunctions occur in data link communications or remote I/O communications.

The NX-series Controller continues normal operation for a certain period of time when a momentary power interruption occurs. This means that the NX-series Controller may receive incorrect signals from external devices that are also affected by the power interruption.
Accordingly, take suitable actions, such as external fail-safe measures and interlock conditions, to monitor the power supply voltage of the external device as required.

You must take fail-safe measures to ensure safety in the event of incorrect, missing, or abnormal signals caused by broken signal lines, momentary power interruptions, or other causes.
Not doing so may result in serious accidents due to incorrect operation.

Voltage and Current Inputs

Make sure that the voltages and currents that are input to the slaves and Units are within the specified ranges.
Inputting voltages or currents that are outside of the specified ranges may cause accidents or fire.

Downloading

Always confirm safety at the destination before you transfer a user program, configuration data, setup data, or device variables from the Sysmac Studio.
The devices or machines may perform unexpected operation regardless of the operating mode of the CPU Unit.

Actual Operation

Check the user program, data, and parameter settings for proper execution before you use them for actual operation.

Security Measures

Anti-virus protection
Install the latest commercial-quality antivirus software on the computer connected to the control system and maintain to keep the software up-to-date.

Security measures to prevent unauthorized access

Take the following measures to prevent unauthorized access to our products.

- Install physical controls so that only authorized personnel can access control systems and equipment.
- Reduce connections to control systems and equipment via networks to prevent access from untrusted devices.
- Install firewalls to shut down unused communications ports and limit communications hosts and isolate control systems and equipment from the IT network.
- Use a virtual private network (VPN) for remote access to control systems and equipment.
- Adopt multifactor authentication to devices with remote access to control systems and equipment.
- Set strong passwords and change them frequently.
- Scan virus to ensure safety of USB drives or other external storages before connecting them to control systems and equipment.

Data input and output protection

Validate backups and ranges to cope with unintentional modification of input/output data to control systems and equipment.

- Checking the scope of data
- Checking validity of backups and preparing data for restore in case of falsification and abnormalities
- Safety design, such as emergency shutdown and fail-soft operation in case of data tampering and abnormalities

Data recovery

Backup data and keep the data up-to-date periodically to prepare for data loss.

When using an intranet environment through a global address, connecting to a SCADA or an unauthorized terminal such as an HMI or to an unauthorized server may result in network security issues such as spoofing and tampering. You must take sufficient measures such as restricting access to the terminal, using a terminal equipped with a secure function, and locking the installation area by yourself.

When constructing an intranet, communication failure may occur due to cable disconnection or the influence of unauthorized network equipment. Take adequate measures, such as restricting physical access to network devices, by means such as locking the installation area.

When using a device equipped with the SD Memory Card function, there is a security risk that a third party may acquire, alter, or replace the files and data in the removable media by removing the removable media or unmounting the removable media. Please take sufficient measures, such as restricting physical access to the Controller or taking appropriate management measures for removable media, by means of locking the installation area, entrance management, etc., by yourself.

Cautions

⚠ Caution

Application

Do not touch any Unit when power is being supplied or immediately after the power supply is turned OFF. Doing so may result in burn injury.

Wiring

Be sure that all terminal screws and cable connector screws are tightened to the torque specified in the relevant manuals. Loose screws may result in fire or malfunction.

When you connect a computer or other peripheral device to a Controller that has a non-isolated DC power supply, either ground the 0-V side of the external power supply for the Unit power supply or do not ground it at all.
If the peripheral devices are grounded incorrectly, the external power supply for the Unit power supply may be short-circuited. Never ground the 24-V side of the power supply, as shown in the following figure.

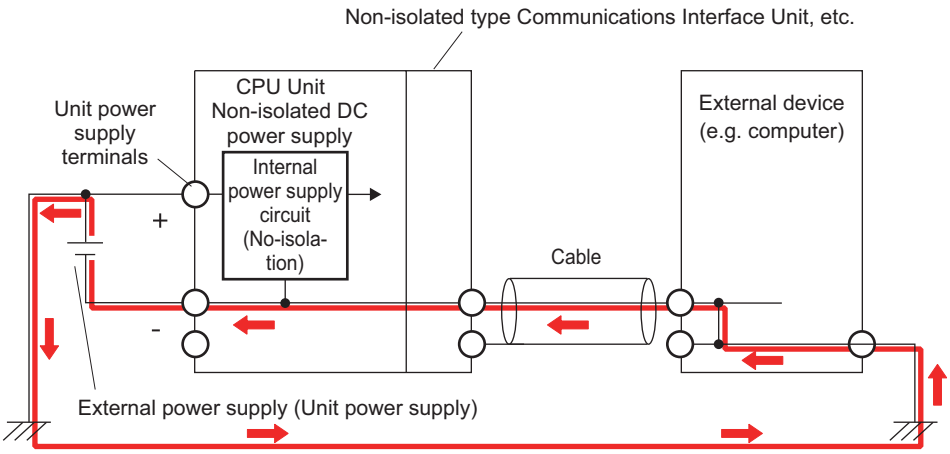

Online Editing

Execute online editing only after confirming that no adverse effects will be caused by deviations in the timing of I/O. If you perform online editing, the task execution time may exceed the task period, I/O may not be refreshed with external devices, input signals may not be read, and output timing may change.

EtherCAT Communications

If the cable redundancy function is enabled, always write a program to confirm that the network is in the cable redundancy status. If the program is not written, you cannot check that the network is not in the cable redundancy status due to a disconnection on the ring topology.
Use the _EC_RingBreaking system-defined variable to confirm that the network is in the cable redundancy status.

Precautions for Safe Use

Transporting and Disassembly

- Do not attempt to disassemble, repair, or modify any Units. Doing so may result in malfunction or fire.
- Do not drop any Unit or subject it to abnormal vibration or shock. Doing so may result in Unit malfunction or burning.
- When transporting any Unit, use the special packing box for it. Also, do not subject the Unit to excessive vibration or shock during transportation.

Mounting

- Always turn OFF the power supply before mounting the Units. If the power supply is not OFF, the Unit may result in malfunction or may be damaged.
- Do not apply labels or tape to the Unit. When the Unit is installed or removed, adhesive or scraps may adhere to the pins in the NX bus connector, which may result in malfunctions.
- Do not touch the pins in the NX bus connector on the Unit. Dirt may adhere to the pins in the NX bus connector, which may result in malfunctions.

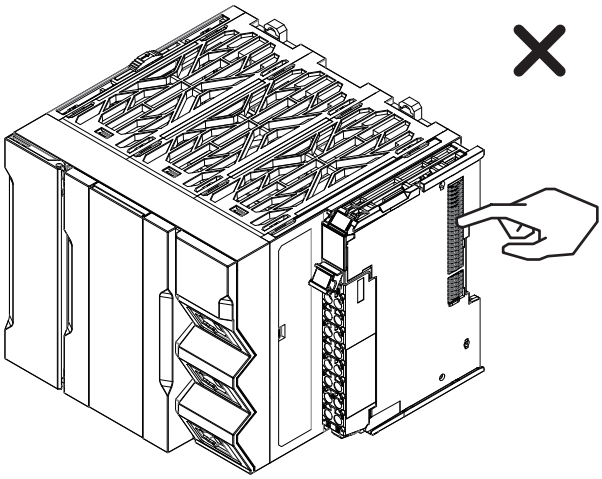

- Do not write anything with ink within the restricted region of the CPU Unit that is shown in the following figure. Also do not get this area dirty. When the Unit is installed or removed, ink or dirt may adhere to the pins in the NX bus connector, which may result in malfunctions in the Unit.
  Refer to the user’s manual for the connected NX Unit for information on the restricted region for the NX Unit.

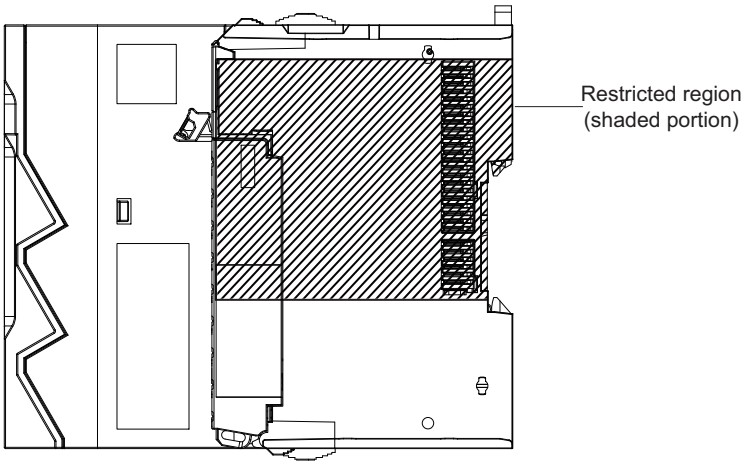

- The End Cover has a metal portion and is heavier than it looks. Be careful not to drop it when handling.

Installation

- Always connect to a ground of 100 Ω or less when installing the Units.

Wiring

- Follow the instructions in this manual to correctly perform wiring.
  Double-check all wiring and switch settings before turning ON the power supply.
- Use the methods that are specified in this manual for wiring the terminal blocks.
- Use crimp terminals for wiring the M3 screw terminal blocks. Do not connect bare stranded wires directly to the M3 screw terminal blocks.
- Use the correct wiring parts and tools when you wire the system. Otherwise, cables may be disconnected to cause short-circuit or wire breakage.
- Do not pull on the cables or bend the cables beyond their natural limit.
  Do not place heavy objects on top of the cables or other wiring lines.
  Doing so may break the cables.
- Mount terminal blocks, connectors, and other parts only after checking the mounting location carefully.
- Be sure that the terminal blocks and communications cables with tightening screws or locking devices are properly tightened to or locked into place.
- If the external power supply to an Output Unit or slave has polarity, connect it with the correct polarity. If the polarity is reversed, current may flow in the reverse direction and damage the connected devices regardless of the operation of the Controller.
- Do not press a flat-blade screwdriver straight into the release hole on a screwless clamping terminal block. Doing so may break the terminal block.

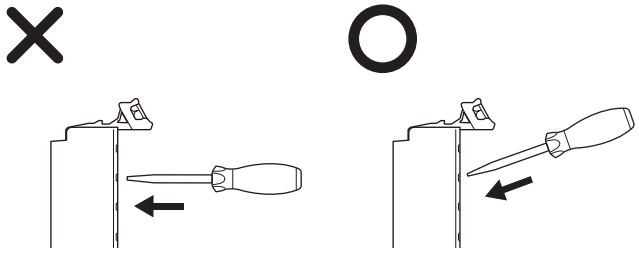

- When you insert a flat-blade screwdriver into a release hole on a screwless clamping terminal block, press it down with a force of 30N or less. Applying excessive force may damage the terminal block.
- Do not incline or twist the flat-blade screwdriver while it is in a release hole on a screwless clamping terminal block. Doing so may break the terminal block.

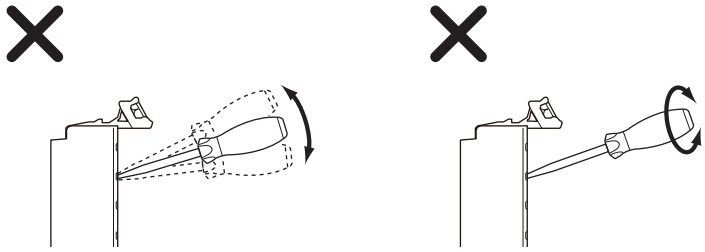

Power Supply Design

- Select an external power supply with sufficient capacity by considering the power supply capacity or inrush current when the power is turned ON that is specified in this manual.
  Otherwise, the external power supply may not be turned ON or malfunction due to unstable power supply voltage.
- Use all Units within the I/O power supply ranges that are given in the specifications.
- Do not apply voltages that exceed the rated value to any Input Unit.
- Do not apply voltages or connect loads to the Output Units or slaves in excess of their ratings.
- Surge current occurs when the power supply is turned ON. When selecting fuses or breakers for external circuits, consider the above precaution and allow sufficient margin in shut-off performance. Refer to this manual for surge current specifications.
- If the full dielectric strength voltage is applied or turned OFF using the switch on the tester, the generated impulse voltage may damage the Power Supply Unit. Use the adjustment on the tester to gradually increase and decrease the voltage.
- Install external breakers and take other safety measures against short-circuiting and overcurrents in external wiring.

Turning ON the Power Supply

- It takes a certain time for startup to enter RUN mode after the power supply is turned ON, depending on the type and configuration of the Unit and its settings.
  During startup, the outputs for NX Units on the CPU Rack will be OFF. Note that the outputs on the slaves will behave according to the setting values.
  Therefore, use the system-defined variables and the device variables for each Unit in the user program to confirm that startup processing and I/O data communications are established before attempting control operations.

External communications are also not performed during startup.
- Configure the external circuits so that the power supply to the control system turns ON only after the power supply to the Controller has turned ON. If the power supply to the Controller is turned ON after the control power supply, temporary errors may result in incorrect control system signals because the output terminals on Output Units may momentarily turn ON when power supply is turned ON to the Controller.
- If you transfer data from a backup file on an SD Memory Card to the Controller when the power supply is turned ON, properly select the data groups to transfer. If the data for an unintended data group is transferred to the Controller, it may cause the equipment to operate unpredictably.
- You cannot obtain normal input data from NX Units while the Units are restarting. Use the system-defined variables or device variables for the NX Units on the CPU Unit in the user program to check the validity of the I/O data before you attempt control operations.

Actual Operation

- If you change the fail-soft operation setting, the output status when the error occurs may also change. Confirm safety before you change the setting.
- If you use fail-soft operation, write programming to determine whether Unit I/O data is valid. Without such programming, the user program cannot distinguish between Units for which I/O refreshing is continued and Units for which I/O refreshing is stopped.

Turning OFF the Power Supply

- Never turn OFF the power supply to the Controller when the BUSY indicator is flashing. While the BUSY indicator is lit, the user program and settings in the CPU Unit are being backed up in the built-in non-volatile memory. This data will not be backed up correctly if the power supply is turned OFF. Also, a major fault level Controller error will occur the next time you start operation, and operation will stop.
- Do not turn OFF the power supply or remove the SD Memory Card while SD Memory Card access is in progress (i.e., while the SD BUSY indicator flashes). Data may become corrupted, and the Controller will not operate correctly if it uses corrupted data. To remove the SD Memory Card from the CPU Unit while the power supply is ON, press the SD Memory Card power supply switch and wait for the SD BUSY indicator and SD PWR indicator to turn OFF before you remove the SD Memory Card.
- If the Unit power supply is turned OFF before the I/O power supply for the control system is turned OFF, the output terminals of Output Units may malfunction and the control system may perform incorrect output temporarily. To avoid this problem, configure the external circuit to make sure that the Unit power supply is turned OFF only after the power supply for the control system is turned OFF.
- Do not disconnect the cable or turn OFF the power supply to the Controller when downloading data or the user program from Support Software.
- Always turn OFF the power supply to the Controller before you attempt any of the following.
  a) Mounting or removing the Units
  b) Assembling the Units
  c) Setting DIP switches or rotary switches
  d) Connecting cables or wiring the system
  e) Connecting or disconnecting the terminal blocks or connectors

The power supply circuit in the CPU Unit may continue to supply power to the Controller for a few seconds after the power supply turns OFF. The POWER indicator is lit during this time.
Confirm that the POWER indicator is not lit before you perform any of the above.

Operation

- Confirm that no adverse effect will occur in the system before you attempt any of the following.
  a) Changing the operating mode of the CPU Unit (including changing the setting of the Startup Mode)
  b) Changing the user program or settings
  c) Changing set values or present values
  d) Forced refreshing
  e) Starting the CPU Unit with the battery exhausted
  f) Restarting a slave or Unit after you change any settings
  g) Transferring a backup file on the SD Memory Card
- After you change any slave or Unit settings, carefully check the safety of the controlled system before you restart the Unit.
- If two different function modules are used together, such as when you use EtherNet/IP and EtherCAT slaves, take suitable measures in the user program and external controls to ensure that safety is maintained in the controlled system if one of the function modules stops. The relevant outputs will behave according to the slave or Unit specifications if a partial fault level error occurs in one of the function modules.
- Always confirm safety at the connected equipment before you reset Controller errors with an event level of partial fault or higher for the EtherCAT Master Function Module.
  When the error is reset, all slaves that were in any state other than Operational state due to a Controller error with an event level of partial fault or higher (in which outputs are disabled) will go to Operational state and the outputs will be enabled.
  Before you reset all errors or restart a slave, confirm that no Controller errors with an event level of partial fault have occurred for the EtherCAT Master Function Module.

Designing Tasks

- If the following variables are specified for a condition expression when the execution condition of event tasks is the same as the condition expression for a variable, event tasks may not be executed when conditions are met, or event tasks may be executed when conditions are not met.
  a) Structure members whose data size is 16 bits or more, except for system-defined variables for motion control
  b) Array elements whose data size is 16 bits or more
  Refer to the *NJ/NX-series CPU Unit Software User's Manual (Cat. No. W501)* for information on event task execution conditions.

Battery Backup

- If you use the clock data in the user program and turn OFF the power supply for a long time, use a Battery which is sold separately.

The Battery is not mounted when the product is at factory setting. The clock data is retained by the built-in capacitor. The capacitor is charged while the power is supplied and discharged while the power is not supplied. If the power OFF time rate is high, the clock data is initialized and malfunctions may occur in the program for which the clock data is used.

- If you use the Battery, connect the Sysmac Studio and set the **Battery-related error detection** to **Use**. The **Battery-related error detection** is set to **Do not use** at the factory setting because the Battery is not built in. If the Battery-related error detection is set to **Do not use**, an error cannot be detected when the Battery is exhausted and malfunctions may occur in the program for which the clock data is used.

Debugging

- Forced refreshing ignores the results of user program execution and refreshes I/O with the specified values. If forced refreshing is used for inputs for which I/O refreshing is not supported, the inputs will first take the specified values, but they will then be overwritten by the user program. Be careful that this operation differs from the force-set/reset functionality of the CJ/CP-series PLCs.
- You cannot upload or download information for forced refreshing with the Sysmac Studio.
  After downloading data that contains forced refreshing, change to RUN mode and then use the Sysmac Studio to perform the operation for forced refreshing.
  Depending on the difference in the forced status, the control system may operate unexpectedly.
- Do not specify the same address for the AT specification for more than one variable.
  Doing so would allow the same entity to be accessed with different variable names, which would make the user program more difficult to understand and possibly cause programming mistakes.
- If the number of array elements of a structure array variable that stores the result set returned from the stored procedure is too large, the DB_ExecuteProcedure instruction may terminate abnormally due to a *Data Capacity Exceeded* error (error code: 041B hex).
  If the error occurs, reduce the number of array elements of the structure array variable and cycle the power to the Controller.

General Communications

- When you use data link communications, check the error information that is given in *_ErrSta* (Controller Error Status) to make sure that no error has occurred in the source device. Create a user program that uses reception data only when there is no error in the source device.
  If there is an error in the source device, the data for the data link may contain incorrect values.
- Unexpected operation may result if inappropriate data link tables are set. Even if appropriate data link tables have been set, confirm that the controlled system will not be adversely affected before you transfer the data link tables. The data links start automatically after the data link tables are transferred.

EtherNet/IP Communications

- Make sure to use the communications distance, number of nodes connected, and method of connection for EtherNet/IP within specifications. Do not connect EtherNet/IP communications to EtherCAT or other networks. An overload may cause the network to fail or malfunction.

- All related EtherNet/IP nodes are reset when you transfer settings for the built-in EtherNet/IP port (including IP addresses and tag data links settings). The settings can only be enabled after the reset. Confirm that the system will not be adversely affected by resetting nodes before you transfer the settings.
- If EtherNet/IP tag data links (cyclic communications) are used with a repeating hub, the communications load on the network will increase. This will increase collisions and may prevent stable communications. Do not use repeating hubs on networks where tag data links are used. Use an Ethernet switch instead.

EtherCAT Communications

- Make sure to use the communications distance, number of nodes connected, and method of connection for EtherCAT within specifications.
  Do not connect EtherCAT communications to EtherNet/IP, a standard in-house LAN, or other networks. An overload may cause the network to fail or malfunction.
- Malfunctions or unexpected operation may occur for some combinations of EtherCAT revisions of the master and slaves. If you disable the revision check in the network settings, use the Sysmac Studio to check the slave revision settings in the master and the actual slave revisions, and then make sure that functionality is compatible in the slave manuals or other references. You can check the actual slave revisions from the Sysmac Studio or on slave nameplates.
- After you transfer the user program, the CPU Unit is restarted and communications with the EtherCAT slaves are cut off. During that period, the slave outputs behave according to the slave specifications. The time that communications are cut off depends on the EtherCAT network configuration. Before you transfer the user program, confirm that the system will not be adversely affected.
- If the **Fail-soft Operation Setting** is set to *Stop*, process data communications will stop for all slaves when an EtherCAT communications error is detected in a slave. At that time, the Servo Drive will operate according to the Servo Drive specifications. Make sure that the *Fail-soft Operation setting* results in safe operation when a device error occurs.
- Even if the Process Data Communication is stopped and subsequently restored automatically, take the external safety measures or set the Fail-soft Operation Settings to *Stop* to make the system operate safe.
- EtherCAT communications are not always established immediately after the power supply is turned ON. Use the system-defined variables in the user program to confirm that communications are established before attempting control operations.
- If noise occurs or an EtherCAT slave is disconnected from the network, any current communications frames may be lost. If frames are lost, slave I/O data is not communicated, and unintended operation may occur. The slave outputs will behave according to the slave specifications. Refer to the manual for the slave. If a noise countermeasure or slave replacement is required, perform the following processing.
  a) Program the Input Data Invalid system-defined variable as an interlock condition in the user program.
  b) Set the **PDO communications timeout detection count** setting in the EtherCAT master to at least 2. Refer to the *NJ/NX-series CPU Unit Built-in EtherCAT Port User's Manual (Cat. No. W505)* for details.
- When an EtherCAT slave is disconnected, communications will stop and control of the outputs will be lost not only for the disconnected slave, but for all slaves connected after it through to the physical end node. Confirm that the system will not be adversely affected before you disconnect a slave.

At the location in cable redundancy state, only the relevant slave stops communications.

- I/O data communications of NX bus are not always established immediately after the power supply is turned ON. Use the system-defined variables and the EtherCAT Coupler Unit device variables in the user program to confirm that I/O data communications are established before attempting control operations.
- You cannot use standard Ethernet hubs or repeater hubs with EtherCAT communications. If you use one of these, a major fault level error or other error may occur.
- Confirm that all of the slaves are connected before you set the transmission delay time by the actual measurement. If the transmission delay time is exceeded from the set values due to the changes of the unit configuration, such as when the disabled salve is connected to the actual configuration after the setting, it may cause illegal communications with slaves.
- When the communications cable that is connected to the slave from other manufacturers on the ring topology is broken or the power supply to the slave from other manufacturers is interrupted, any current communications frames may be lost.
  If frames are lost, slave I/O data is not communicated, and unintended operation may occur.
  When slaves from other manufacturers are connected on the ring topology, check the followings in advance.
  a) Disconnect and connect communications cables that are connected to the output ports of slaves from other manufacturers several times, and there is no error except for a *Ring Disconnection Detected*.
  b) Disconnect and connect communications cables that are connected to the input ports of slaves from other manufacturers several times, and there is no error except for a *Ring Disconnection Detected*.
  c) Turn OFF and ON the power supply to the slaves from other manufacturers, and there is no error except for a *Illegal Slave Disconnection Detected*.
- If you use the cable redundancy function, confirm that the task execution time is within the task period while the cable for the end port of the ring is disconnected. When a disconnection occurred on the ring topology, the transmission delay time is increased and the task execution time may be longer.

Motion control

- Confirm the axis number carefully before you perform an MC Test Run.
- The motor is stopped if communications are interrupted between the Sysmac Studio and the CPU Unit during an MC Test Run. Connect the communications cable between the computer and CPU Unit securely and confirm that the system will not be adversely affected before you perform an MC Test Run.
- Always execute the Save Cam Table instruction if you change any of the cam data from the user program in the CPU Unit or from the Sysmac Studio. If the cam data is not saved, the previous condition will be restored when the power is turned ON again, possibly causing unexpected machine operation.
- The positive drive prohibit input (POT), negative drive prohibit input (NOT), and home proximity input (DEC) of the Servo Drive are used by the MC Function Module as the positive limit input, negative limit input, and home proximity input. Make sure that the signal widths for all of these input signals are longer than the control period of the MC Function Module. If the input signal widths are shorter than the control period, the MC Function Module may not be able to detect the input signals, resulting in incorrect operation.

- If you make any changes in the Detailed Settings Area of the **Axis Basic Settings** Display of the Sysmac Studio, make sure that the devices or machines perform the expected operation before you start actual operation.
  If the relationship between the functions of the Motion Control Function Module and the EtherCAT slave process data that is assigned to the axes is not correct, the devices or machines may perform unexpected operation.
- Always use the axis at a constant velocity for the MC_DigitalCamSwitch (Enable Digital Cam Switch) instruction.
  If you set the Count Mode to Rotary Mode, the following operation will occur if you use OnCompensation or OffCompensation and the axis velocity changes abruptly.
  a) If the value of OnCompensation or OffCompensation is equivalent to the time for half a rotation or more, InOperation will be FALSE.
  b) If the value of OnCompensation results in exceeding LastOnPosition, the output timing will be unstable.

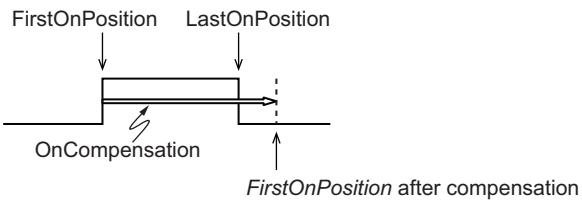

  c) If the value of OffCompensation results in exceeding FirstOnPosition, the output timing will be unstable.

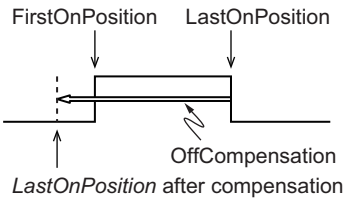

- Use the NX_AryDOutTimeStamp (Write Digital Output Array with Specified Time Stamp) instruction only after you confirm that InOperation from the MC_DigitalCamSwitch (Enable Digital Cam Switch) instruction is TRUE.
- If you change the unit conversion settings, perform homing again. If you do not perform homing, unintended operation of the controlled system may occur.

Backing Up Data

- We recommend that you back up the present values of variables while the retained variables are not refreshed.
  If you back up variables while the values of retained variables are refreshed, the data may not be saved correctly.
  Refer to the *NJ/NX-series CPU Unit Software User's Manual (Cat. No. W501)* for details on the backup function and backing up the present values of variables.

Restoring Data

- You cannot back up, restore, or compare some or all of the settings for certain slaves and Units. Also, you cannot back up, restore, or compare data for disabled slaves or Units. After you restore data, sufficiently confirm that operation is correct before you start actual operation.
- If any of the following conditions is met, clear the absolute encoder home offsets from the list of data items to restore, and then restore the data. Then, define the absolute encoder home again. If you do not define home, unintended operation of the controlled system may occur.
  a) The Servomotor or Servo Drive was changed since the data was backed up.
  b) The absolute encoder was set up after the data was backed up.
  c) The absolute data for the absolute encoder was lost.

Transferring Programs

- When you use the program transfer from SD Memory Card whose Startup Mode setting is set to RUN mode, the operating mode changes to RUN after the transfer is completed regardless of the status and setting before the transfer. Use this function after you confirm that system startup does not cause any problem.
- Always confirm safety at the connected equipment before you perform the following operations when the device output hold configuration is set to enable. The equipment may operate unexpectedly because the last status for outputs is retained.
  a) Changing the operating mode of the CPU Unit
  b) When downloaded
- When you transfer the values retained in the memory of the CJ-series Units, always check the set values of the Device Output Hold Configuration and make sure that the destination is safe.
  The devices or machines may perform unexpected operation regardless of the operating mode of the CPU Unit.

Battery Installation and Replacement

- The Battery may leak, rupture, heat, or ignite. Never short-circuit, charge, disassemble, heat, or incinerate the Battery or subject it to strong shock.
- Dispose of any Battery that has been dropped on the floor or otherwise subjected to excessive shock. Batteries that have been subjected to shock may leak if they are used.
- Apply power for at least five minutes before changing the Battery. Install a new Battery within five minutes (at 25°C) of turning OFF the power supply. If power is not supplied for at least 5 minutes, the retained clock data may be initialized.
- We recommend mounting or replacing the Battery with the power turned OFF to prevent the CPU Unit’s sensitive internal components from being damaged by static electricity and to prevent malfunctions. The Battery can be mounted or replaced without turning OFF the power supply. To do so, always touch a grounded piece of metal to discharge static electricity from your body before you start the procedure.
  If the Low Battery Voltage error occurs after you mount the Battery, connect the Sysmac Studio and clear the error.

Unit Replacement

- Make sure that the required data, including the user program, configurations, settings, and variables, is transferred to a CPU Unit that was replaced and to externally connected devices before restarting operation. Be sure to include the tag data link settings and routing tables, which are stored in the CPU Unit.
- The absolute encoder home offsets are retained in the CPU Unit as absolute encoder information. When you change the combination of the CPU Unit and Servomotor, e.g., when you add or replace a Servomotor, define the absolute encoder home again.
- Always turn OFF the Unit power supply and I/O power supply before you remove the NX Unit.

Disposal

- Dispose of the Units and Batteries according to local ordinances as they apply.

- The following information must be displayed for all products that contain primary lithium batteries with a perchlorate content of 6 ppb or higher when shipped to or transported through the State of California, USA.
  Perchlorate Material - special handling may apply.
  See www.dtsc.ca.gov/hazardouswaste/perchlorate.
- The Battery is a primary lithium battery with a perchlorate content of 6 ppb or higher. Place the above information on the individual boxes and shipping boxes when shipping finished products that contain a CPU Unit with a mounted Battery to the State of California, USA.

Precautions for Correct Use

Storage and Installation

- Follow the instructions in this manual to correctly perform installation.
- Do not operate or store the Controller in the following locations. Doing so may result in burning, in operation stopping, or in malfunction.
  a) Locations subject to direct sunlight
  b) Locations subject to temperatures or humidity outside the range specified in the specifications
  c) Locations subject to condensation as the result of severe changes in temperature
  d) Locations subject to corrosive or flammable gases
  e) Locations subject to dust (especially iron dust) or salts
  f) Locations subject to exposure to water, oil, or chemicals
  g) Locations subject to shock or vibration
- Take appropriate and sufficient countermeasures when installing the Controller in the following locations.
  a) Locations subject to strong, high-frequency noise
  b) Locations subject to static electricity or other forms of noise
  c) Locations subject to strong electromagnetic fields
  d) Locations subject to possible exposure to radioactivity
  e) Locations close to power lines
- Before touching a Unit, be sure to first touch a grounded metallic object in order to discharge any static build-up.
- Install the Controller away from sources of heat and ensure proper ventilation. Not doing so may result in malfunction, in operation stopping, or in burning.
- If you use a Controller that has not been operated for more than half a year, check that there is no error when the power is supplied.

Mounting

- When you install the Unit, be careful not to touch or bump the pins in the NX bus connector and X Bus connector.
- When you handle the Unit, be careful not to apply stress to the pins in the NX bus connector and X Bus connector.
  If the Unit is installed and the power supply is turned ON when the pins in the connector are deformed, contact failure may cause malfunctions.
- Mount a cover to the left end of the X Bus Unit to prevent foreign objects from entering. A short signal circuit or contact failure may cause malfunctions.
- Always mount an End Cover to the end of the CPU Rack to protect the last Unit on the CPU Rack. Not mounting the End Cover may result in malfunction or failure of the CPU Unit.
- After you mount the Unit, always secure it with End Plates at both sides. If you do not secure it, the Unit may be damaged or malfunction.
- If you use DIN Track Insulation Spacers to install a CPU Rack, the height will be increased by approximately 10 mm. Make sure that the CPU Rack and connecting cables do not come into contact with other devices.

Wiring

- Do not allow foreign matter to enter the openings in the Unit. Doing so may result in Unit burning, electric shock, or failure.
- Do not allow wire clippings, shavings, or other foreign material to enter any Unit. Otherwise, Unit burning, failure, or malfunction may occur. Cover the Units or take other suitable countermeasures, especially during wiring work.
- For EtherCAT and EtherNet/IP, use the connection methods and cables that are specified in the *NJ/NX-series CPU Unit Built-in EtherCAT Port User's Manual* (Cat. No. W505) and the *NJ/NX-series CPU Unit Built-in EtherNet/IP Port User's Manual* (Cat. No. W506). Otherwise, communications may be faulty.
- Use the rated power supply voltage for the Units that supply power. Take appropriate measures to ensure that the specified power with the rated voltage and frequency is supplied in places where the power supply is unstable.
- Make sure that the current capacity of the wire is sufficient. Otherwise, excessive heat may be generated. When cross-wiring terminals, the total current for all the terminals will flow in the wire. When wiring cross-overs, make sure that the current capacity of each of the wires is not exceeded.
- If you use reed switches for the input contacts for AC Input Units, use switches with a current capacity of 1 A or greater.
  If reed switches with smaller allowable currents are used, the contacts may fuse due to surge currents.

Operation

- Confirm the device output hold configuration before you change the operating mode of the CPU Unit or execute the download.

Error Processing

- In applications that use the results of instructions that read the error status, consider the affect on the system when errors are detected and program error processing accordingly. For example, even the detection of a minor error, such as Battery replacement during operation, can affect the system depending on how the user program is written.
- If you change the event level of a Controller error, the output status when the error occurs may also change. Confirm safety before use.

Restoring and Automatically Transferring Data

- When you edit the restore command file or the automatic transfer command file, do not change anything in the file except for the "yes" and "no" specifications for the selectable data groups. If you change anything else in the file, the Controller may perform unexpected operation when you restore or automatically transfer the data.

Transferring Programs

- If you use the program transfer from SD Memory Card, set to enter the password for each execution to prevent an unexpected program transfer.

Replacing Slaves and Units

- If you replace a slave or Unit, refer to the operation manual for the slave or Unit for information on the data required for individual slaves or Units and redo the necessary settings.

Task Settings

- If a Task Period Exceeded error occurs, shorten the programs to fit in the task period or increase the setting of the task period.

Motion Control

- Use the system-defined variable in the user program to confirm that EtherCAT communications are established before you attempt to execute motion control instructions. Motion control instructions are not executed normally if EtherCAT communications are not established.
- Use the system-defined variables to monitor for errors in communications with the slaves that are controlled by the motion control function module. Motion control instructions are not executed normally if an error occur in slave communications.
- Before you start an MC Test Run, make sure that the operation parameters are set correctly.
- Do not download motion control settings during an MC Test Run.

EtherCAT Communications

- If you need to disconnect an EtherCAT slave cable during an operation, specify the disconnection of the software connection of the EtherCAT slave first.
  Apply the *Disable* function for those EtherCAT slaves which you plan to replace in the future. If you need to replace an EtherCAT slave due to a failure or other troubles, be sure to specify disconnecting the software connection.
- If you replace a slave or Unit, refer to the operation manual for the slave or Unit for information on the data required for individual slaves or Units and redo the necessary settings.
- Set the Servo Drives to stop operation if an error occurs in EtherCAT communications between the Controller and a Servo Drive.
- Make sure that all of the slaves to be restored are participating in the network before you reset a *Network Configuration Verification Error (Mismatched Slave)*, *Network Configuration Verification Error (Slave Unconnected)*, *Network Configuration Verification Error (Unnecessary Slave Connected)*, *Network Configuration Verification Error (Incorrect Ring Wiring)*, *Illegal Slave Disconnection Detected* or *Link OFF Error* in the EtherCAT Master Function Module. If any slave is not participating when any of these errors is reset, the EtherCAT Master Function Module may access slave with a different node address than the specified node address or the error may not be reset correctly.

- Always use the specified EtherCAT slave cables. If you use any other cable, the EtherCAT master or the EtherCAT slaves may detect an error and one of the following may occur.
  a) Continuous refreshing of process data communications will not be possible.
  b) Continuous refreshing of process data communications will not end during the set cycle.
- When the wiring for slaves in the ring topology is incorrect and input ports or output ports are connected each other, an *EtherCAT Frame Not Received* will occur and message communications and process data communications may stop. Therefore, make sure that the wiring of communications cables for slaves is correct.
- If a power OFF or disconnection occurs in a slave that is outside the ring topology or an error in the EtherCAT master is reset, when there is a synced slave in the actual network configuration, the cable redundancy status is reset temporarily for DC Synchronous Correction.

Battery Replacement

- Be sure to mount a Battery within two years of the production date shown on the Battery label.
- Turn ON the power after replacing the Battery for a CPU Unit that has been unused for a long time. Leaving the CPU Unit unused again without turning ON the power even once after the Battery is replaced may result in a shorter Battery life.
- If you use the Battery, use the CJ1W-BAT01 Battery Set which is sold separately.

SD Memory Cards

- Insert the SD Memory Card all the way.
- Do not turn OFF the power supply to the Controller during SD Memory Card access. The files may be corrupted.
  If there is a corrupted file in the SD Memory Card, the file is automatically deleted by the restoration function when the power supply is turned ON.
- If you use an OMRON SD Memory Card, the end of the life of the SD Memory Card can be detected in the following ways.
  a) *_Card1Deteriorated* (SD Memory Card Life Warning Flag) system-defined variable
  b) *SD Memory Card Life Exceeded (Observation)* event in the event log
  When the end of the life is detected in any of the above ways, replace the SD Memory Card.

Version Information

Combination of the CPU Unit version and SD Memory Card determines whether the SD memory card life expiration detection function can be used or not. Refer to *Specification of Supported SD Memory Cards, Folders, and Files* in the *NJ/NX-series CPU Unit Software User's Manual (Cat. No. W501)* for details.

Debugging

- When performing online editing, the CPU Unit saves a program updated by the online editing to built-in non-volatile memory. Sysmac Studio shows a message that it is in a backup operation. Do not turn OFF the power supply to the Controller while this message is displayed. If the power supply to the Controller is turned OFF, a Controller error will occur when the power supply is turned ON next time.

- If you use data tracing to sample the following variables, correct data may not be sampled.
  a) Structure members whose data size is 16 bits or more, except for system-defined variables for motion control
  b) Array elements whose data size is 16 bits or more

  Refer to the *NJ/NX-series CPU Unit Software User's Manual (Cat. No. W501)* for information on data tracing.
- Before you execute the stored procedure call function, make sure to verify the name of the stored procedure to execute, the processing details, and the argument values.

Updating Firmware

- When the firmware is updated, the existing settings, user programs, variables, and other data in the CPU Unit are initialized.
- Never turn OFF the power supply to the Controller while updating the firmware for which the BUSY indicator is flashing.
  During the firmware update, the firmware of the built-in non-volatile memory in the CPU Unit is overwritten. If the power supply is turned OFF, the firmware will not be updated normally.
- If you cannot confirm that the firmware update is completed with the indicator, be sure to execute the firmware update again.

Security Measures

- If you forget the User name or Password, go online with administrator right and check the user authentication settings.
  If you forget the User name or Password for administrator right, start the Controller in Safe Mode and connect the Sysmac Studio online, and then execute Clear All Memory operation according to **If you cannot log in** in the displayed Authentication in Safe Mode Dialog Box.
- If the Sysmac Studio cannot connect because you forgot the IP address registered in the Packet Filter settings, set the Controller to Safe Mode and connect it.

Disposal

- When disposing of or transferring our products, information such as user data stored in the device may be seen by third parties, resulting in information leakage. It is recommended that you erase the data on your responsibility before disposing of or transferring the device. Omron shall not be liable for any loss, damage, or other expenses incurred directly or indirectly in the event of any information leakage due to disposal or transfer.
  For details on *complete data erasure function* for completely erasing user data, refer to the *NJ/NX-series CPU Unit Software User's Manual (Cat. No. W501)*.

Regulations and Standards

Conformance to EMC and Electrical Safety Regulations

Concepts

OMRON products are industrial electrical devices that are incorporated into various types of machines and manufacturing equipment. The products conform to relevant standards so that the machines and equipment incorporating the OMRON products can comply with EMC and Electrical Safety Regulations more easily.

Refer to the OMRON website (www.ia.omron.com) or ask your OMRON representative for the most recent standards to which our products conform.

● Conformance to EMC regulations

This product complies with EMC regulations when assembled in a PLC system or Machine Automation Controller. However, for the radiated emission requirements, in particular, please note that the actual emission varies depending on the configuration of the control panel to be used, the connected devices, and wiring methods. Therefore, customers themselves must confirm that the entire machine or equipment conforms to EMC regulations, even you are using a device that conforms to EMC regulations.

Caution:
This equipment is not intended for use in residential environments and may not provide adequate protection to radio reception in such environments.

● Conformance to Electrical Safety regulations

The NX-series Units comply with Electrical Safety regulations required by specific laws and regulations such as the EU Directive and UKCA.
For precautions for each product, see the instruction manual included with the product.

● Precautions for NX-series Units

For the conformance to EMC and Electrical Safety regulations of the NX-series Units, the following precautions must also be observed.

- The NX-series Units must be installed within a control panel.
- You must use SELV power supply for the DC power supplies that are connected as the Unit power supplies and I/O power supplies for the NX-series Units. We recommend using OMRON S8VK-S Series Power Supplies. EMC standard compliance was confirmed for the recommended power supplies.
- You must use power supply with an output hold time of 10 ms or more for the DC power supplies that are connected as the Unit power supplies and I/O power supplies for the NX-series Units.

Conformance to UL and CSA Standards

Some NX-series products comply with UL and CSA standards.

If you use a product that complies with UL or CSA standards and must apply those standards to your machinery or devices, refer to the *Instruction Sheet* that is provided with the product. The *Instruction Sheet* provides the application conditions for complying with the standards.

Conformance to KC Certification

When you use this product in South Korea, observe the following precautions.

사 용 자 안 내 문
이 기기는 업무용 환경에서 사용할 목적으로 적합성평가를 받은 기기로서 가정용 환경에서 사용하는 경우 전파간섭의 우려가 있습니다.

This product meets the electromagnetic compatibility requirements for business use. There is a risk of radio interference when this product is used in home.

Software Licenses and Copyrights

This product incorporates certain third party software. The license and copyright information associated with this software is available at http://www.fa.omron.co.jp/nj_info_e/.

Versions

Hardware revisions and unit versions are used to manage the hardware and software in NX-series Units and EtherCAT slaves.
The hardware revision or unit version is updated each time there is a change in hardware or software specifications. Even when two Units or EtherCAT slaves have the same model number, they will have functional or performance differences if they have different hardware revisions or unit versions.

Checking Versions

You can check versions in the ID information indications on the product or with the Sysmac Studio.

Checking Unit Versions on ID Information Indications

The unit version is given on the ID information indication on the side of the product.
The ID information on an NX-series CPU Unit NX502-□□00 is shown below.

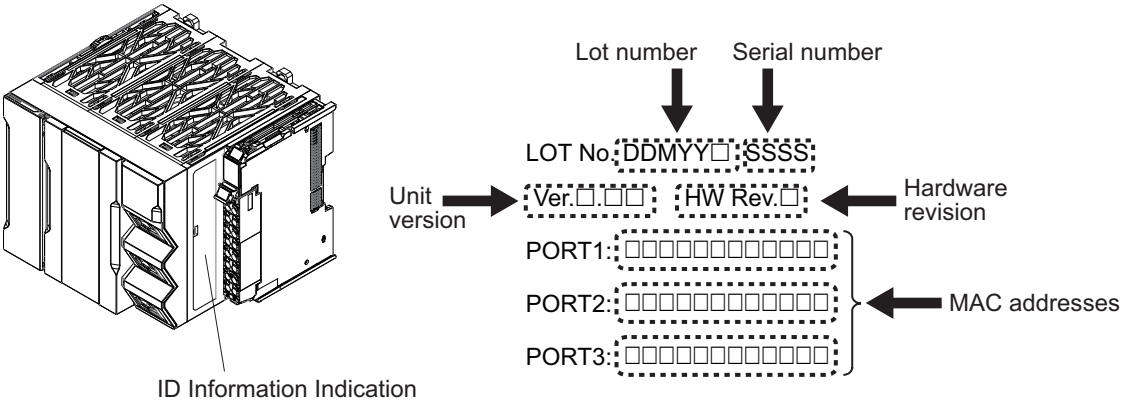

Checking Unit Versions with the Sysmac Studio

Checking the Unit Version of a Unit

You can use the **Production Information** while the Sysmac Studio is online to check the unit version of a Unit. You can do this for the CPU Unit and NX Units on the CPU Rack.
Use the following procedure to check the unit version.

1 Right-click **CPU Rack** under **Configurations and Setup - CPU/Expansion Racks** in the Multiview Explorer and select **Display Production Information**.
The **Production Information** Dialog Box is displayed.

2 Click the **Show Detail** or **Show Outline** Button at the lower right of the **Production Information** Dialog Box.
The view will change between the **Production Information** details and outline.

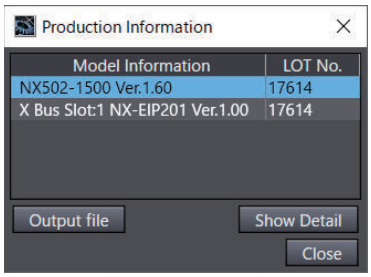

Outline View

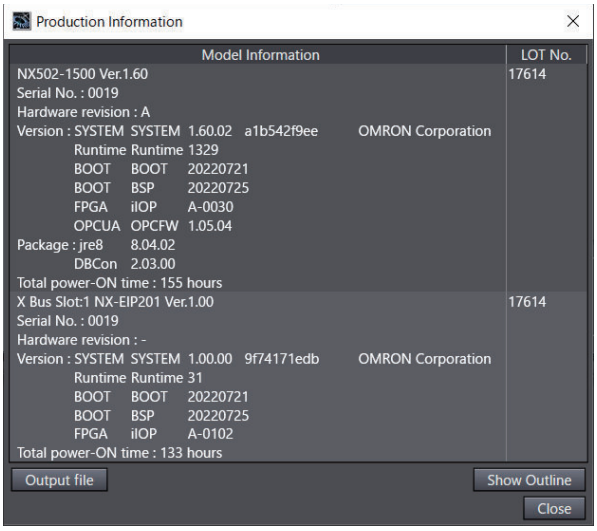

Detail View

The information that is displayed is different for the Outline View and Detail View. The Detail View displays the unit version, hardware revision, and software versions. The Outline View displays only the unit version.

Checking the Unit Version of an EtherCAT Slave

You can use the **Production Information** while the Sysmac Studio is online to check the unit version of an EtherCAT slave. Use the following procedure to check the unit version.

1 Double-click **EtherCAT** under **Configurations and Setup** in the Multiview Explorer. Or, right-click **EtherCAT** under **Configurations and Setup** and select **Edit** from the menu.
The EtherCAT Tab Page is displayed for the Controller Configurations and Setup Layer.

2 Right-click the master on the EtherCAT Tab Page and select **Display Production Information**.
The Production Information Dialog Box is displayed. The unit version is displayed after "Rev."

● Changing Information Displayed in Production Information Dialog Box

1 Click the **Show Detail** or **Show Outline** Button at the lower right of the **Production Information** Dialog Box.
The view will change between the **Production information** details and outline.

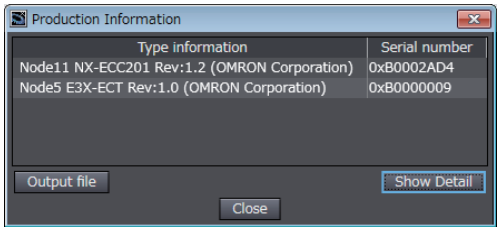

Outline View

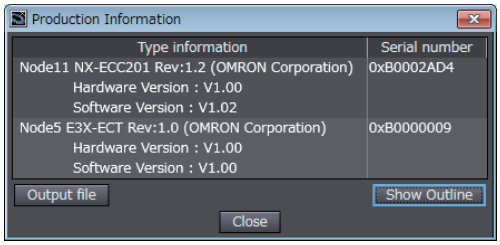

Detail View

Unit Versions of CPU Units and Sysmac Studio Versions

The functions that are supported depend on the unit version of the NX-series CPU Unit. The version of Sysmac Studio that supports the functions that were added for an upgrade is also required to use those functions.
Refer to *Version Information for NX-series Controllers* in the *NJ/NX-series CPU Unit Software User's Manual (Cat. No. W501)* for the relationship between the unit versions of the CPU Units and the Sysmac Studio versions, and for the functions that are supported by each unit version.

Related Manuals

The following manuals are related. Use these manuals for reference.

Manual name	Cat. No.	Model	Application	Description
NX-series NX502 CPU Unit Hardware User's Manual	W629	NX502-□□□□	Learning the basic specifications of the NX502 CPU Units, including introductory information, designing, installation, and maintenance. Mainly hardware information is provided.	An introduction to the entire NX502 system is provided along with the following information on the CPU Unit. • Features and system configuration • Introduction • Part names and functions • General specifications • Installation and wiring • Maintenance and inspection
NJ/NX-series CPU Unit Software User's Manual	W501	NX701-□□□□ NX502-□□□□ NX102-□□□□ NX1P2-□□□□ NJ501-□□□□ NJ301-□□□□ NJ101-□□□□	Learning how to program and set up an NJ/NX-series CPU Unit. Mainly software information is provided.	The following information is provided on a Controller built with an NJ/NX-series CPU Unit. • CPU Unit operation • CPU Unit features • Initial settings • Programming based on IEC 61131-3 language specifications
NJ/NX-series Instructions Reference Manual	W502	NX701-□□□□ NX502-□□□□ NX102-□□□□ NX1P2-□□□□ NJ501-□□□□ NJ301-□□□□ NJ101-□□□□	Learning detailed specifications on the basic instructions of an NJ/NX-series CPU Unit.	The instructions in the instruction set (IEC 61131-3 specifications) are described.
NJ/NX-series CPU Unit Motion Control User's Manual	W507	NX701-□□□□ NX502-□□□□ NX102-□□□□ NX1P2-□□□□ NJ501-□□□□ NJ301-□□□□ NJ101-□□□□	Learning about motion control settings and programming concepts.	The settings and operation of the CPU Unit and programming concepts for motion control are described.
NJ/NX-series Motion Control Instructions Reference Manual	W508	NX701-□□□□ NX502-□□□□ NX102-□□□□ NX1P2-□□□□ NJ501-□□□□ NJ301-□□□□ NJ101-□□□□	Learning about the specifications of the motion control instructions.	The motion control instructions are described.
NJ/NX-series CPU Unit Built-in EtherCAT® Port User's Manual	W505	NX701-□□□□ NX502-□□□□ NX102-□□□□ NX1P2-□□□□ NJ501-□□□□ NJ301-□□□□ NJ101-□□□□	Using the built-in EtherCAT port on an NJ/NX-series CPU Unit.	Information on the built-in EtherCAT port is provided. This manual provides an introduction and provides information on the configuration, features, and setup.

Manual name	Cat. No.	Model	Application	Description
NJ/NX-series CPU Unit Built-in EtherNet/IP™ Port User's Manual	W506	NX701-□□□□ NX502-□□□□ NX102-□□□□ NX1P2-□□□□ NJ501-□□□□ NJ301-□□□□ NJ101-□□□□	Using the built-in EtherNet/IP port on an NJ/NX-series CPU Unit.	Information on the built-in EtherNet/IP port is provided. Information is provided on the basic setup, tag data links, and other features.
NJ/NX-series CPU Unit OPC UA User's Manual	W588	NX701-□□□□ NX502-□□□□ NX102-□□□□ NJ501-1□00	Using the OPC UA.	Describes the OPC UA.
NX-series CPU Unit FINS Function User's Manual	W596	NX701-□□20 NX502-□□□□ NX102-□□□□	Using the FINS function of an NX-series CPU Unit.	Describes the FINS function of an NX-series CPU Unit.
NJ/NX-series Database Connection CPU Units User's Manual	W527	NX701-□□20 NX502-□□□□ NX102-□□20 NJ501-□□20 NJ101-□□20	Using the database connection service with NJ/NX-series Controllers.	Describes the database connection service.
NX-series CPU Unit Automation Playback User's Manual	W639	NX502-□□□□	Using automation playback	Describes automation playback.
NJ/NX-series Troubleshooting Manual	W503	NX701-□□□□ NX502-□□□□ NX102-□□□□ NX1P2-□□□□ NJ501-□□□□ NJ301-□□□□ NJ101-□□□□	Learning about the errors that may be detected in an NJ/NX-series Controller.	Concepts on managing errors that may be detected in an NJ/NX-series Controller and information on individual errors are described.
Sysmac Studio Version 1 Operation Manual	W504	SYSMAC -SE2□□□	Learning about the operating procedures and functions of the Sysmac Studio.	Describes the operating procedures of the Sysmac Studio.
NX-series EtherNet/IP™ Unit User's Manual	W627	NX-EIP201	Learning how to use the NX-series EtherNet/IP Unit.	Information on the NX-series EtherNet/IP Unit is provided. Information is provided on the basic setup, tag data links, and other features.
NX-series EtherCAT® Coupler Unit User's Manual	W519	NX-ECC□□□	Learning how to use the NX-series EtherCAT Coupler Unit and EtherCAT Slave Terminals.	The following items are described: the overall system and configuration methods of an EtherCAT Slave Terminal (which consists of an NX-series EtherCAT Coupler Unit and NX Units), and information on hardware, setup, and functions to set up, control, and monitor NX Units through EtherCAT.
NX-series Data Reference Manual	W525	NX-□□□□□□	Referencing lists of the data that is required to configure systems with NX-series Units.	Lists of the power consumptions, weights, and other NX Unit data that is required to configure systems with NX-series Units are provided.

Manual name	Cat. No.	Model	Application	Description
NX-series NX Units User’s Manual	W521	NX-ID□□□□ NX-IA□□□□ NX-OC□□□□ NX-OD□□□□ NX-MD□□□□	Learning how to use NX Units.	Describes the hardware, setup methods, and functions of the NX Units. Manuals are available for the following Units. Digital I/O Units, Analog I/O Units, System Units, Position Interface Units, Communications Interface Units, Load Cell Input Unit, and IO-Link Master Units.
	W522	NX-AD□□□□ NX-DA□□□□		
	W592	NX-HAD□□□		
	W566	NX-TS□□□□ NX-HB□□□□		
	W523	NX-PD1□□□ NX-PF0□□□ NX-PC0□□□ NX-TBX01		
	W524	NX-EC0□□□ NX-ECS□□□ NX-PG0□□□		
	W540	NX-CIF□□□		
	W565	NX-RS□□□□		
	W567	NX-ILM□□□		
NX-series Safety Control Unit User's Manual	Z930	NX-SL□□□□ NX-SI□□□□ NX-SO□□□□	Learning how to use NX-series Safety Control Units.	Describes the hardware, setup methods, and functions of the NX-series Safety Control Units.
NA-series Programmable Terminal Software User’s Manual	V118	NA5-□W□□□□	Learning about NA-series PT pages and object functions.	Describes the pages and object functions of the NA-series Programmable Terminals.

Terminology

Terminology	Description
AT	One of the attributes of a variable. This attribute allows the user to specify what is assigned to a variable. An I/O port or an address in memory used for CJ-series Units can be specified.
CJ-series Unit	Any of the CJ-series Units that can be used with an NJ-series Controller.
memory used for CJ-series Units	One type of I/O memory that contains addresses to which variables can be assigned, for example, when accessing a CJ-series Unit or CJ-series network. It can be accessed only with variables with an AT attribute.
CPU Unit	The Unit that serves as the center of control for a Machine Automation Controller. The CPU Unit executes tasks, refreshes I/O for other Units and slaves, etc. The NJ/NX-series CPU Units include the NX701-□□□□, NX102-□□□□, NX1P2-□□□□, NJ501-□□□□.
EtherCAT Master Function Module	One of the function modules. This function module controls the EtherCAT slaves as the EtherCAT master.
EtherNet/IP Function Module	One of the function modules. This function module controls the built-in EtherNet/IP port.
FB	An acronym for "function block."
FUN	An abbreviation for "function."
I/O port	A logical interface that is used by the CPU Unit to exchange data with an external device (slave or Unit).
I/O map settings	Settings that assign variables to I/O ports. Assignment information between I/O ports and variables.
I/O refreshing	Cyclic data exchange with external devices that is performed with predetermined memory addresses.
MC Test Run	A function to check motor operation and wiring from the Sysmac Studio.
NX bus	An internal bus of the NX-series Controller.
NX Units	Any of the NX-series Units that perform I/O processing with connected external devices. The Communications Coupler Units are not included with the NX Units.
PDO communications	An abbreviation for process data communications. Data is exchanged between the master and slaves on a process data communications cycle. (The process data communications cycle is the same as the task period of the primary periodic task.)
PLC Function Module	One of the function modules. This function module executes the user program, sends commands to the Motion Control Function Module, and provides an interface to the USB and SD Memory Card.
POU	An acronym for "program organization unit". A POU is a unit in a program execution model that is defined in IEC 61131-3. A POU contains an algorithm and a local variable table and forms the basic unit used to build a user program. There are three types of POUs: programs, functions, and function blocks.
SDO communications	One type of EtherCAT communications in which service data objects (SDOs) are used to transmit information whenever required.
Sysmac Studio	A computer software application for setting, programming, debugging, and troubleshooting NJ/NX-series Controllers. It also provides operations for motion control and a Simulator.
X Bus	An internal bus of the NX-series Controller. A bus that can transfer data with a higher speed and larger capacity than the NX bus.

Terminology	Description
X Bus Function Module	One of the function modules. This function module controls X Bus Units mounted to the left side of the CPU Unit.
X Bus Units	Units that can connect to the X Bus.
upload	To transfer data from the Controller to the Sysmac Studio with the synchronization operation of the Sysmac Studio.
information	One of the event levels for Controller events or user-defined events. These are not errors, but appear in the event log to notify the user of specific information.
Event Setup	Settings that define user-defined errors and user-defined information.
event task	A task that executes a user program only once when the task execution conditions are met.
event log	A function that recognizes and records errors and other events.
inline ST	ST programming that is included within a ladder diagram.
edge	One of the attributes of a variable. This attribute makes a BOOL variable pass TRUE to a function block when the variable changes from FALSE to TRUE or when it changes from TRUE to FALSE.
cam data variable	A variable that represents the cam data as a structure array. A cam data variable is an array structure that consists of phases and displacements.
observation	One of the event levels for Controller events or user-defined events. These are minor errors that do not affect control operations, but appear in the event log to notify the user of specific information.
function module	One of the functional units of the software configuration of the CPU Unit.
basic data type	Any of the data types that are defined by IEC 61131-3. They include Boolean, bit string, integer, real, duration, date, time of day, date and time, and text string data types. "Basic data type" is used as opposed to derivative data types, which are defined by the user.
forced refreshing	Forcing the refreshing of an input from an external device or an output to an external device, e.g., when the user debugs a program. Addresses that are subject to forced refreshing can still be overwritten from the user program.
union	One of the derivative data types. It allows you to handle the same data as different data types.
global variable	A variable that can be read or written from all POUs (programs, functions, and function blocks).
minor fault level Controller error	An error for which some of the control operations for one of the function modules in the NJ/NX-series Controller stop. An NJ/NX-series CPU Unit continues operation even after a minor fault level Controller error occurs.
Special Unit Setup	A generic term for the settings for a Special Unit, including the settings in allocated DM Area words.
structure	One of the derivative data types. It consists of multiple data types placed together into a layered structure.
Constant	One of the attributes of a variable. If you specify the Constant attribute for a variable, the value of the variable cannot be written by any instructions, ST operators, or CIP message communications.

Terminology	Description
Controller	The range of devices that are directly controlled by the CPU Unit. In the NX-series System, the Controller includes the CPU Rack and EtherCAT slaves (including general-purpose slaves and Servo Drives). In the NJ-series System, the Controller includes the CPU Rack, Expansion Racks, and EtherCAT slaves (including general-purpose slaves and Servo Drives).
Controller error	Errors that are defined by the NJ/NX-series System. “Controller error” is a collective term for major fault level, partial fault level, minor fault level, and observation Controller events.
Controller event	One of the events in the NJ/NX-series System. Controller events are errors and information that are defined by the system for user notification. A Controller event occurs when the system detects a factor that is defined as a Controller event.
Controller information	Information that is defined by the NJ/NX-series System that is not an error. It represents an information Controller event.
Servo Drive/encoder input slave	Any of the EtherCAT slaves that is assigned to an axis. In the NJ/NX-series System, it would be a Servo Drive or Encoder Input Slave Unit.
axis	A functional unit within the Motion Control Function Module. An axis is assigned to the drive mechanism in an external Servo Drive or the sensing mechanism in an external Encoder Input Slave Unit.
axes group	A functional unit that groups together axes within the Motion Control Function Module.
Axes Group Variable	A system-defined variable that is defined as a structure and provides status information and some of the axes parameters for an individual axes group. An Axes Group Variable is used to specify an axes group for motion control instructions and to monitor the command interpolation velocity, error information, and other information for the axes group.
Axis Variable	A system-defined variable that is defined as a structure and provides status information and some of the axis parameters for an individual axis. An Axis Variable is used to specify an axis for motion control instructions and to monitor the command position, error information, and other information for the axis.
system common processing	System processing that is performed by the CPU Unit to perform I/O refreshing and the user program execution within a task. Exclusive control of variables between tasks, data trace processing, and other processing is performed.
system service	Processing that is performed by the CPU Unit in unused time between task processing. The system service includes communications processing, SD Memory Card access processing, self-diagnosis processing, and other processing.
system-defined variable	A variable for which all attributes are defined by the system and cannot be changed by the user.
Initial Value	One of the attributes of a variable. The variable is set to the initial value in the following situations. • When power is turned ON • When the CPU Unit changes to RUN mode • When you specify to initialize the values when the user program is transferred • When a major fault level Controller error occurs
slave	A device that performs remote I/O for a master.
Slave Terminal	A building-block remote I/O terminal to which a Communications Coupler Unit and NX Units are mounted. A Slave Terminal is one type of slave.
slave and Unit configurations	A generic term for the EtherCAT configuration and Unit configuration.

Terminology	Description
absolute encoder home offset	This data is used to restore in the CPU Unit the actual position of a Servo Drive with an absolute encoder. The offset is the difference between the command position after homing and the absolute data that is read from the absolute encoder.
project unit version	A unit version to be set for the project. It is set for the project in the Select Device Area of the Project Properties Dialog Box on the Sysmac Studio.
major fault level Controller error	An error for which all NJ/NX-series Controller control operations stop. The CPU Unit immediately stops user program execution and turns OFF the loads for all slaves and Units (including remote I/O).
download	To transfer data from the Sysmac Studio to the Controller with the synchronization operation of the Sysmac Studio.
task	An attribute that defines when a program is executed.
task period	The interval at which the primary periodic task or a periodic task is executed.
Communications Coupler Unit	The generic name of an interface unit for remote I/O communications on a network between NX Units and a host network master. For example, an EtherCAT Coupler Unit is a Communications Coupler Unit for an EtherCAT network.
periodic task	A tasks for which user program execution and I/O refreshing are performed each period.
device	A general term for any Unit or slave that is refreshed by the I/O refreshing that is performed by the CPU Unit. Specifically, it refers to EtherCAT slaves, NX Units on the CPU Unit, built-in I/O, Option Boards, and CJ-series Units.
device output	An output for any Unit or slave that is refreshed by the I/O refreshing that is performed by the CPU Unit.
device variable	A variable that is used to access a specific device through an I/O port.
synchronization	A function that automatically compares the information in the NJ/NX-series Controller with the information in the Sysmac Studio, displays any differences and locations in a hierarchical form, and can be used to synchronize the information.
namespace	A system that is used to group and nest the names of functions, function block definitions, and data types.
Network Publish	One of the attributes of a variable. This attribute allows you to use CIP message communications or tag data links to read/write variables from another Controller or from a host computer.
array specification	One of the variable specifications. An array variable contains multiple elements of the same data type. The elements in the array are specified by serial numbers called subscripts that start from the beginning of the array.
derivative data type	A data type that is defined by the user. Structures, unions, and enumerations are derivative data types.
Range Specification	One of the variable specifications. You can specify a range for a variable in advance. The variable can take only values that are in the specified range.
general-purpose slave	Any of the EtherCAT slaves that cannot be assigned to an axis.
function	A POU that is used to create an object that determines a unique output for the same input, such as for data processing.
function block	A POU that is used to create an object that can have a different output for the same input, such as for a timer or counter.
partial fault level Controller error	An error for which all of the control operations for one of the function modules in the NJ/NX-series Controller stop. An NJ/NX-series CPU Unit continues operation even after a partial fault level Controller error.
primary periodic task	The task with the highest priority.
program	Along with functions and function blocks, one of the three types of POUs. Programs are assigned to tasks to execute them.

Terminology	Description
process data communications	One type of EtherCAT communications in which process data objects (PDOs) are used to exchange information cyclically and in realtime. Process data communications are also called PDO communications.
variable	A representation of data, such as a numeric value or character string, that is used in a user program. You can change the value of a variable by assigned the required value. “Variable” is used as opposed to “constant,” for which the value does not change.
variable memory	A memory area that contains the present values of variables that do not have AT specifications. It can be accessed only with variables without an AT attribute.
Retain	One of the attributes of a variable. The values of variables with a Retain attribute are held at the following times. (Variables without a Retain attribute are set to their initial values.) • When power is turned ON after a power interruption • When the CPU Unit changes to RUN mode • When you specify to not initialize the values when the user program is transferred
instruction	The smallest unit of the processing elements that are provided by OMRON for use in POU algorithms. There are ladder diagram instructions (program inputs and outputs), function instructions, function block instructions, and ST statements.
main memory	The memory inside the CPU Unit that is used by the CPU Unit to execute the OS and user program.
Motion Control Function Module	One of the function modules. The MC Function Module performs motion control based on commands from the motion control instructions that are executed in the user program.
motion control instruction	A function block instruction that executes motion control. The Motion Control Function Module supports instructions that are based on function blocks for PLCopen® motion control as well as instructions developed specifically for the Motion Control Function Module.
user-defined event	One of the events in the NJ/NX-series System. These events are defined by the user. “User-defined events” is a generic term for user-defined errors and user-defined information.
user-defined variable	A variable for which all of the attributes are defined by the user and can be changed by the user.
user program	All of the programs in one project.
Unit	A device that mounts to the CPU Rack or an Expansion Rack.
Unit configuration	The configuration information for the Units that are set on the Sysmac Studio. This information tells what Unit models are connected to the CPU Unit and where they are connected.
literal	A constant expression that is used in a user program.
enumeration	One of the derivative data types. This data type takes one item from a prepared name list of enumerators as its value.
enumerator	One of the values that an enumeration can take expressed as a character string. The value of an enumeration is one of the enumerators.
local variable	A variable that can be accessed only from inside the POU in which it is defined. “Local variable” is used as opposed to “global variable.” Local variables include internal variables, input variables, output variables, in-out variables, and external variables.

Revision History

A manual revision code appears as a suffix to the catalog number on the front and back covers of the manual.

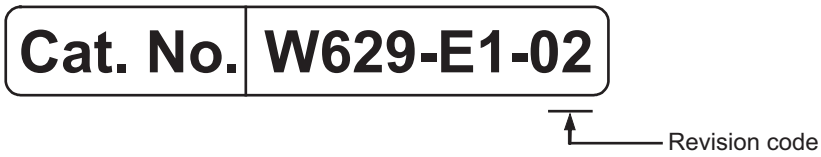

Revision code	Date	Revised content
01	April 2023	Original production
02	July 2023	Corrected mistakes.

1

Introduction to NX-series Controllers

This section describes the features, basic system configuration, specifications, and overall operating procedure of an NX-series Controller NX502.

1-1 The NX-series Controller 1-2
1-1-1 Features 1-3
1-1-2 Introduction to the System Configurations 1-6
1-2 Specifications 1-10
1-3 Overall Operating Procedure for the CPU Unit 1-15
1-3-1 Overall Procedure 1-15
1-3-2 Procedure Details 1-16

1-1 The NX-series Controller

The SYSMAC NX-series are next-generation machine automation controllers that provide the functionality and high-speed performance that are required for machine control. They provide the safety, reliability, and maintainability that are required of industrial controllers.
The NJ/NX-series Controllers provide the functionality of previous OMRON PLCs, and they also provide the functionality that is required for motion control. Synchronized control of I/O devices on high-speed EtherCAT can be applied to safety devices, vision systems, motion equipment, discrete I/O, and more.
Especially, the NX-series NX502 Controller can perform I/O operation with the mounted NX Unit and X Bus Unit.
OMRON offers the new Sysmac Series of control devices designed with unified communications specifications and user interface specifications. The NX-series Machine Automation Controllers are part of the Sysmac Series. You can use them together with EtherCAT slaves, other Sysmac products, and the Sysmac Studio Automation Software to achieve optimum functionality and ease of operation.
With a system that is created from Sysmac products, you can connect components and commission the system through unified concepts and usability.

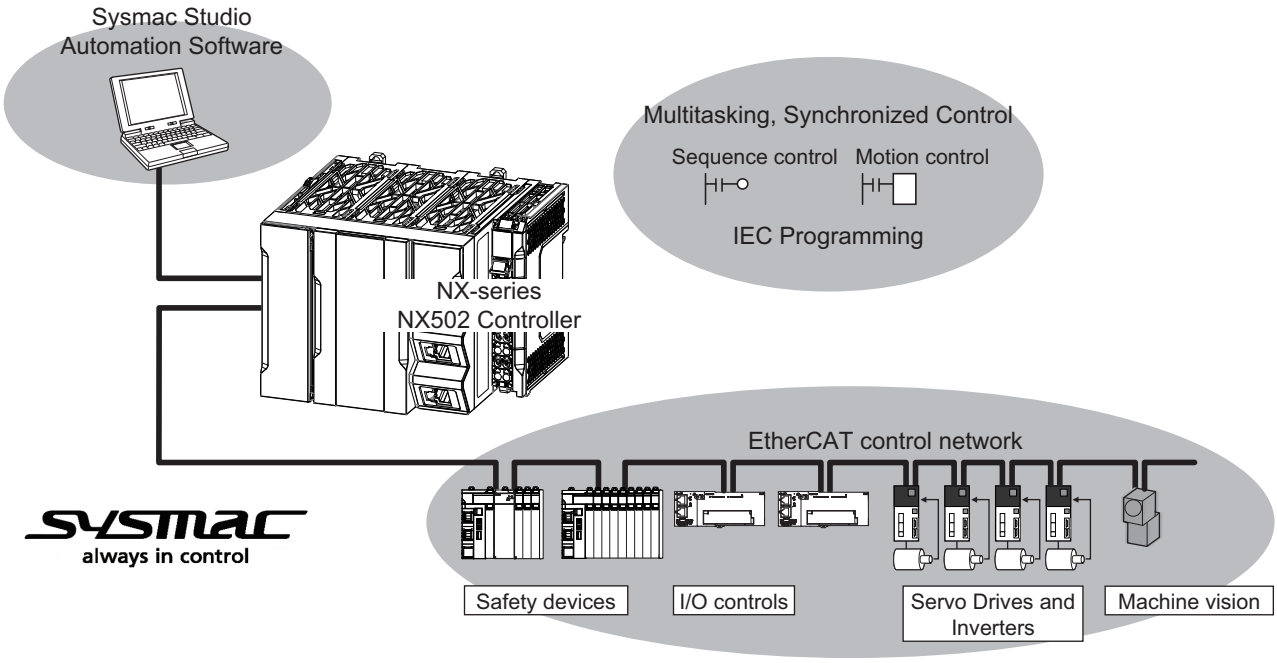

1-1-1 Features

Hardware Features

● Standard-feature EtherCAT Control Network Support

All CPU Units provide an EtherCAT master port for EtherCAT communications.
EtherCAT is an advanced industrial network system that achieves faster, more-efficient communications. It is based on Ethernet. Each node achieves a short fixed communications cycle time by transmitting Ethernet frames at high speed.
The standard-feature EtherCAT control network allows you to connect all of the devices required for machine control (e.g., I/O systems, Servo Drives, Inverters, and machine vision) to the same network.

● Support for EtherCAT Slave Terminals

You can use EtherCAT Slave Terminals to save space. You can also flexibly build systems with the wide variety of NX Units.

● Achieving a Safety Subsystem

You can use NX-series Safety Control Units to integrate safety controls in sequence and motion control systems.

● Standard-feature EtherNet/IP Communications Ports

All CPU Units provide two EtherNet/IP ports for EtherNet/IP communications.
EtherNet/IP is a multi-vendor industrial network that uses Ethernet. You can use it for networks between Controllers or as a field network. The use of standard Ethernet technology allows you to connect to many different types of general-purpose Ethernet devices.
Moreover, with two EtherNet/IP ports these CPU Units enable the integrated control of two separate control systems, for example, one of the host information control system for communications between Controllers and the other for a lower-level field network control system.

● X Bus Units Connectable

All CPU Units provide the X Bus that is used to transfer data with a larger capacity than the NX bus.
Up to four X Bus Units such as EtherNet/IP Units can be mounted to the CPU Unit.

● Up to 10 EtherNet/IP Networks Constructible

You can mount four EtherNet/IP Units (X Bus Units) to the CPU Unit to build up to 10 EtherNet/IP networks.
With network segmentation of up to 10 systems, it is possible to realize large capacity data communications of production information, quality information, and equipment information for improving the yield rate in the production line.
In addition, it is possible to realize a flexible and safe line configuration in a large-scale assembly line.

● NX-series Units Connectable

The CPU Unit can be connected with up to 63 NX Units including NX-series Digital I/O Units, Analog I/O Units, and other I/O Units.

● Battery-free Operation

The following data (other than the clock data) is retained in the built-in non-volatile memory.

- User program
- Set values
- Variables retained during power interruption
- Event logs

The retention period for the clock data is limited[*1].

When the clock data is not needed or the equipment's power OFF time is shorter than the clock data retention period, the battery-free operation is possible and man-hours for battery replacement can be reduced.

If you turn OFF the power supply to the equipment for a longer period of time than the clock data retention period, mount a battery which is sold separately.

*1. Approximately 10 days at an ambient temperature of 40°C. Refer to *3-1-6 Battery* on page 3-10 for detail.

● Standard-feature SD Memory Card Slot

You can access an SD Memory Card that is mounted in the CPU Unit from the user program.

● Highly Reliable Hardware

The NX-series Controllers provide the hardware reliability and RAS functions that you expect of a PLC.

Software Features

● Integrated Sequence Control and Motion Control

An NX-series CPU Unit can perform both sequence control and motion control. You can simultaneously achieve both sequence control and multi-axes synchronized control. Sequence control, motion control, and I/O refreshing are all executed in the same control period.

The same control period is also used for the process data communications cycle for EtherCAT. This enables precise sequence and motion control in a fixed period with very little deviation.

● Available with IoT Applications

All NX502 CPU Units provide a high precision global clock, database connection service, and OPC UA server.

The global clock allows to manage information from equipment and processes throughout the factory with the same time information based on site data with high precision time information acquired from gPTP compatible L2 switches.

Therefore, it is also available with IoT applications where high precision time information can be added to the EtherCAT I/O information and controller calculation information with a CPU Unit, and information can be provided directly to the host systems.

● Programming Languages Based on the IEC 61131-3 International Standard

The NJ-series Controllers support language specifications that are based on IEC 61131-3. To these, OMRON has added our own improvements. Motion control instructions that are based on PLCopen® standards and an instruction set (POUs) that follows IEC rules are provided.

● Programming with Variables to Eliminate Worrying about the Memory Map

You access all data through variables in the same way as for the advanced programming languages that are used on computers. Memory in the CPU Unit is automatically assigned to the variables that you create so that you do not have to remember the physical addresses.

● A Wealth of Security Features

The many security features of the NX-series Controllers include operation authority settings and restriction of program execution with IDs.

● Providing Database Connection Service

The database connection service is a function to insert, update, retrieve, and delete records to/from a relational database on a server connected to the built-in EtherNet/IP port or EtherNet/IP Unit (X Bus Unit) by executing special instructions on the NX502 CPU Unit.
In addition, secure communications can be established by using the encrypted communication function.
No special Unit and tool are required for the database connection function. You can use the NX502 CPU Units and Sysmac Studio.
Also, the server does not need any special middleware for connection to the NX-series CPU Units.
For details on the database connection service, refer to the *NJ/NX-series Database Connection CPU Units User's Manual (Cat. No. W527)*.
Note An SD Memory Card is not included.

● Complete Controller Monitoring

The CPU Unit monitors events in all parts of the Controller, including mounted NX Units and EtherCAT slaves.
Troubleshooting information for errors is displayed on the Sysmac Studio or on an NS-series PT.
Events are also recorded in logs.

● Sysmac Studio Automation Software

The Sysmac Studio provides an integrated development environment that covers not only the Controller, but also covers peripheral devices and devices on EtherCAT. You can use consistent procedures for all devices regardless of the differences in the devices. The Sysmac Studio supports all phases of Controller application, from designing through debugging, simulations, commissioning, and changes during operation.

● A Wealth of Simulation Features

The many simulation features include execution, debugging, and task execution time estimates on a virtual controller.

1-1-2 Introduction to the System Configurations

The NX-series Controller NX502 supports the following system configurations.

Basic System Configurations

The NX-series Controller NX502 basic configurations include the EtherCAT network configuration, NX Unit configuration, X Bus Unit configuration, and the Support Software.

- EtherCAT Network Configuration
  You can use the built-in EtherCAT port on the CPU Unit to connect to EtherCAT Slave Terminals, to general-purpose slaves for analog and digital I/O, and to Servo Drives and encoder input slaves. An EtherCAT network configuration enables precise sequence and motion control in a fixed cycle with very little deviation.
- X Bus Unit Configuration
  The CPU Unit can be connected with X Bus Units including EtherNet/IP Units.
- NX Unit configuration
  The CPU Unit can be connected with up to 63 NX Units (NX-□□□□□□) including NX-series Digital I/O Units, Analog I/O Units, and other I/O Units. These NX Units can be flexibly combined with the CPU Unit and configure a CPU Rack to support various applications.
- Support Software
  You can connect the Support Software through an Ethernet cable that is connected to the built-in EtherNet/IP port 1 or 2 in the CPU Unit.
  Refer to *3-6-2 Connection* on page 3-17 for details on the connection configuration of the Support Software.

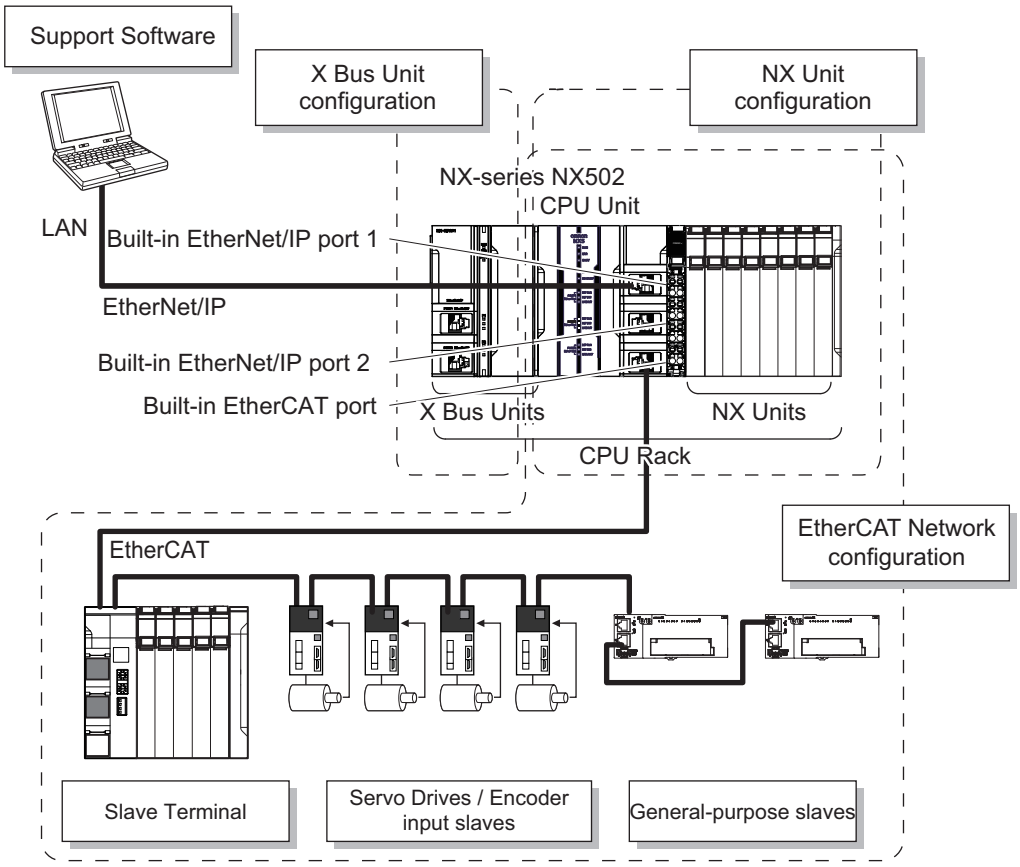

Network Configurations

- Host computers, HMIs, and other NJ/NX-series Controllers or field network devices are connected to the built-in EtherNet/IP port 2 on the CPU Unit.
- A DeviceNet network is connected to a CJ-series DeviceNet Unit mounted to the NJ-series CPU Unit.
- A serial communications network is connected to the following Units.
  NX-series Communications Interface Unit
  CJ-series Serial Communications Unit

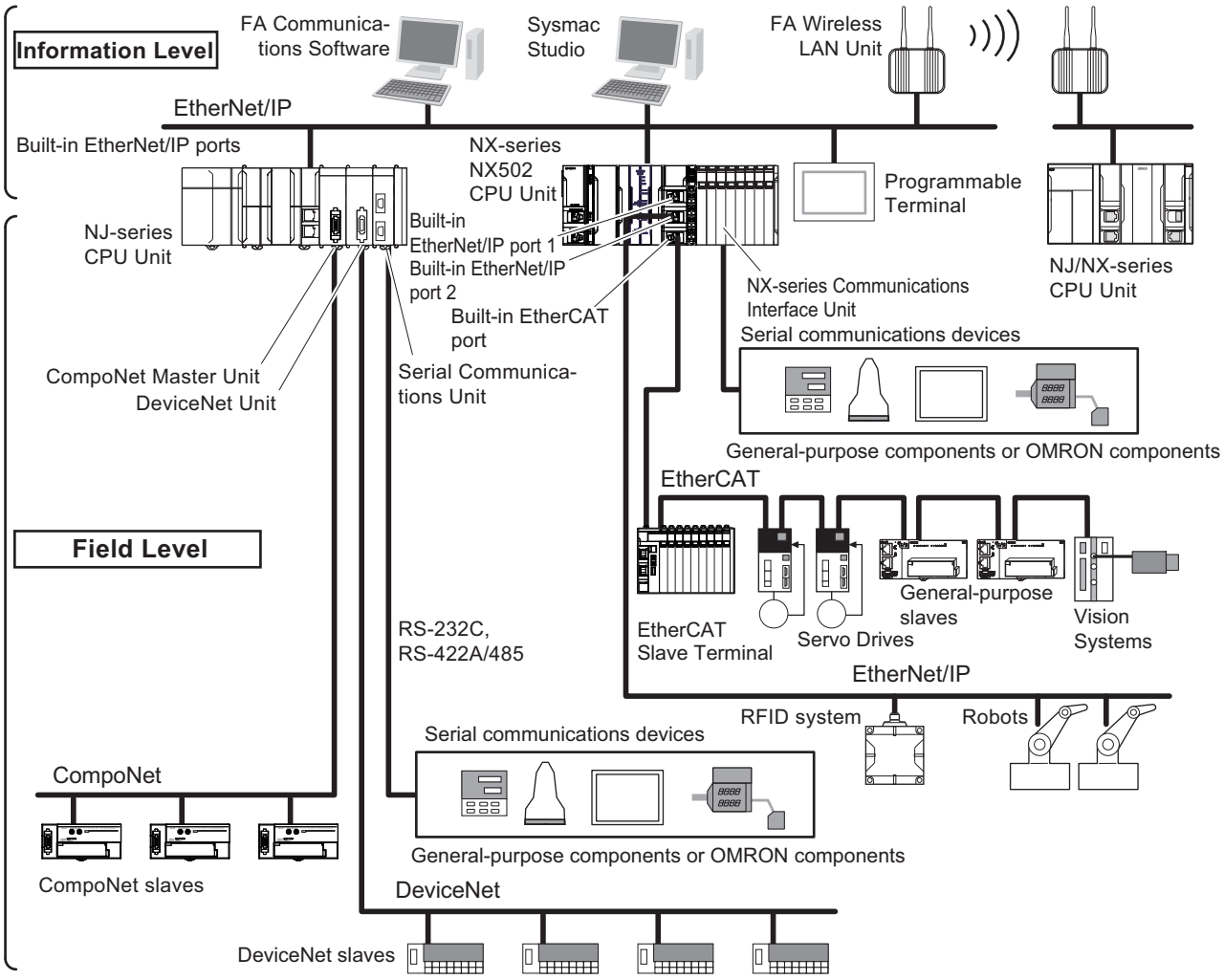

Refer to the *NJ/NX-series CPU Unit Software User's Manual (Cat. No. W501)* for details on the network configuration.

Support Software

You can use the following Support Software to set up, monitor, and debug an NX-series Controller.

- Sysmac Studio
  The Sysmac Studio is the main Support Software that you use for an NX-series Controller. On it, you can set up the Controller configurations, parameters, and programs, and you can debug and simulate operation.
- Other Support Software
  The following Support Software is also included in the Sysmac Studio Software Package Standard Edition.

Configuration software	Application
Sysmac Studio	The Sysmac Studio is used for sequence control, motion control, and all other operations except those described below.
Network Configurator	The Network Configurator is used for tag data links on EtherNet/IP ports. *1
CX-Integrator	The CX-Integrator is used for remote I/O communications with a CJ-series DeviceNet Unit or CJ-series CompoNet Master Unit.

Configuration software	Application
CX-Protocol	The CX-Protocol is used for protocol macros with the CJ-series Serial Communications Units.
CX-Designer	The CX-Designer is used to create screens for NS-series PTs.

*1. If the NJ/NX-series Controller is a target device, you may also use Sysmac Studio version 1.10 or higher. Use the Network Configurator if a CS/CJ-series PLC operates as the originator device.

1-2 Specifications

This section gives the specifications of the NX-series NX502 CPU Units.

Item				NX502-		
				15□□	14□□	13□□
Processing time	Instruction execution times	LD Instruction		0.53 ns or more		
		Math instructions (for long real data)		3.3 ns or more		
Programming	Program capacity*1	Size		80 MB		
		Quantity	Number of POU definitions	6,000		
			Number of POU instances	48,000		
	Memory capacity for variables*2	Retain attributes	Size	4 MB		
			Number of variables	40,000		
		No Retain attributes	Size	256 MB		
			Number of variables	360,000		
	Data types	Number of data types		8,000		
	Memory for CJ-series Units (Can be specified with AT specifications for variables.)	CIO Area		0 to 6,144 words (CIO 0 to CIO 6,143)*3		
		Work Area		0 to 512 words (W0 to W511)*3		
		Holding Area		0 to 1,536 words (H0 to H1,535)*4		
		DM Area		0 to 32,768 words (D0 to D32,767)*4		
		EM Area		32,768 words × 25 banks (E0_0 to E18_32,767)*4		
Motion control	Number of controlled axes*5	Maximum number of controlled axes		128 axes	64 axes	32 axes
			Motion control axes	128 axes	64 axes	32 axes
			Single-axis position control axes	---		
		Maximum number of used real axes		64 axes	32 axes	16 axes
			Used motion control servo axes	64 axes	32 axes	16 axes
			Used single-axis position control servo axes	---		
		Maximum number of axes for linear interpolation axis control		4 axes per axes group		
		Number of axes for circular interpolation axis control		2 axes per axes group		
	Maximum number of axes groups			32 axes groups		
	Motion control period			The same control period as that is used for the process data communications cycle for EtherCAT.		
	Maximum velocity of axes			2 G pps		
	Cams	Number of cam data points	Maximum points per cam table	65,535 points		
			Maximum points for all cam tables	1,048,560 points		
		Maximum number of cam tables		640 tables		
	Position units			Pulse, mm, μm, nm, degree, and inch		

Item				NX502-		
				15□□	14□□	13□□
	Override factors			0.00%, or 0.01% to 500.00%		
Built-in EtherNet/IP port	Number of ports			2		
	Physical layer			10BASE-T, 100BASE-TX, 1000BASE-T		
	Frame length			1,514 bytes max.		
	Media access method			CSMA/CD		
	Modulation			Baseband		
	Topology			Star		
	Baud rate			1 Gbps (1000BASE-T)		
	Transmission media			STP (shielded, twisted-pair) cable of Ethernet category 5, 5e or higher		
	Maximum transmission distance between Ethernet switch and node			100 m		
	Maximum number of cascade connections			There are no restrictions if an Ethernet switch is used.		
	CIP service: Tag data links (cyclic communications)	Maximum number of connections		64 per port 128 total		
		Packet interval*6		Can be set for each connection. 1 to 10,000 ms in 1-ms increments		
		Permissible communications band		20,000 pps*7*8(including heartbeat)		
		Maximum number of tag sets		64 per port 128 total		
		Tag types		Network variables CIO, Work, Holding, DM, and EM Areas		
		Number of tags per connection (i.e., per tag set)		64 (63 tags if Controller status is included in the tag set.)		
		Maximum number of tags		256 per port 512 total		
		Maximum link data size per node (total size for all tags)		92,416 bytes per port 184,832 bytes total		
		Maximum data size per connection		1,444 bytes		
		Maximum number of registrable tag sets		64 per port 128 total (1 connection = 1 tag set)		
		Maximum tag set size		1,444 bytes (Two bytes are used if Controller status is included in the tag set.)		
		Multi-cast packet filter*9		Supported.		
	CIP message service: Explicit messages	Class 3 (number of connections)		128 per port 256 total (clients plus server)		
		UCMM (non-connection type)	Maximum number of clients that can communicate at one time	32 per port 64 total		
			Maximum number of servers that can communicate at one time	32 per port 64 total		
	Number of TCP sockets			60		
	Secure socket services	Number of secure sockets		60		
		TLS version		1.2		

Item				NX502-		
				15□□	14□□	13□□
	DB connection services*10	Supported DB versions	SQLServer by Microsoft	2019		
			Oracle Database by Oracle	19c, 21c		
			MySQL Community Edition by Oracle	8.0		
			PostgreSQL by PostgreSQL Global Development Group	14		
		Number of DB Connections (Number of databases that can be connected at the same time)		3		
		Max. number of DB Map Variables for which a mapping can be connected	SQLServer by Microsoft	60		
			Oracle Database by Oracle	30		
			MySQL Community Edition by Oracle	30		
			PostgreSQL by PostgreSQL Global Development Group	30		
		Spool function		Used to store SQL statements when an error occurred and resend the statements when the communications are recovered from the error.		
		Spool capacity		2 MB		
		Encrypted communications	Supported databases	SQL Server, Oracle, MySQL, PostgreSQL		

Item				NX502-		
				15□□	14□□	13□□
	OPC UA Server*11	Support profile/Model		Embedded 2017 UA Server Profile PLCopen Information Model		
		Default Endpoint/Port		opc.tcp://192.168.250.1:4840/		
		Maximum number of sessions (Client)		5		
		Maximum number of Monitored Items per server		2,000		
		Sampling rate of Monitored Items (ms)		0*12, 50, 100, 250, 500, 1,000, 2,000, 5,000, 10,000		
		Maximum number of Subscriptions per server		100		
		Maximum number of variables that can be published		10,000		
		Maximum number of value attributes that can be published*13		10,000		
		Number of structure definitions that can be published		100		
		Restrictions on variables unable to be published		• Variables whose size is over 60 KB • Two-dimensional or higher structure arrays • Structures that include two-dimensional and higher arrays • Structures with four or higher levels of nesting • Unions • Arrays whose index number suffix does not start from 0 • Arrays with more than 2,048 elements • Structures with more than 100 members		
		Security Policy/Mode		Select one of the following. None Sign - Basic128Rsa15 Sign - Basic256 Sign - Basic256Sha256 SignAndEncrypt - Basic128Rsa15 SignAndEncrypt - Basic256 SignAndEncrypt - Basic256Sha256		
		Application Authentication	Authentication	X.509		
			Maximum number of storable certifications	Trusted certification: 32 Issuer certification: 32 Rejected certification: 32		
		User Authentication	Authentication	You can set the following items. User name/Password Anonymous		
Built-in EtherCAT port	Communications standard			IEC 61158 Type12		
	EtherCAT master specifications			Class B (Feature Pack Motion Control compliant)		
	Physical layer			100BASE-TX		
	Modulation			Baseband		
	Baud rate			100 Mbps (100BASE-TX)		
	Duplex mode			Auto		
	Topology			Line, daisy chain, branching, and ring*14		
	Transmission media			Twisted-pair cable of category 5 or higher (double-shielded straight cable with aluminum tape and braiding)		
	Maximum transmission distance between nodes			100 m		
	Maximum number of slaves			256		
	Range of node addresses that can be set			1 to 256		

Item			NX502-		
			15□□	14□□	13□□
	Maximum process data size		Input: 11,472 bytes Output: 11,472 bytes		
	Maximum process data size per slave		Input: 1,434 bytes Output: 1,434 bytes		
	Communications cycle		Primary periodic task 250 μs to 8 ms (in 250-μs increments)		
	Sync jitter		1 μs max.		
Unit configuration	Units on CPU Rack	Maximum number of X Bus Units that can be mounted to the CPU Unit	4		
		Maximum number of NX Units that can be mounted to the CPU Unit	63		
		Maximum I/O data size that can be allocated in the CPU Unit	Inputs: 8,192 bytes*15 Outputs: 8,192 bytes*15		
	Maximum number of NX Units for entire controller		4096		
	Power supply	Model	A non-isolated power supply for DC input is built into the CPU Unit.		
		Power OFF detection time	2 to 4 ms		
Internal clock	Accuracy		At ambient temperature of 55°C: -4.0 to 4.0 min error per month At ambient temperature of 25°C: -2.5 to 2.5 min error per month At ambient temperature of 0°C: -4.0 to 4.0 min error per month		
	Retention time of built-in capacitor		At ambient temperature of 40°C: 10 days		

*1. Execution objects and variable tables (including variable names)
*2. Memory for CJ-series Units is included.
*3. The value can be set in 1-word increments. The value is included in the total size of variables without a Retain attribute.
*4. The value can be set in 1-word increments. The value is included in the total size of variables with a Retain attribute.
*5. For terminology, refer to the *NJ/NX-series CPU Unit Motion Control User's Manual (Cat. No. W507)*.
*6. Data will be refreshed at the set interval, regardless of the number of nodes.
*7. "pps" means packets per second, i.e., the number of communications packets that can be sent or received in one second.
*8. The allowable bandwidth varies depending on the RPI of the connection in use, the primary task period, and the number of ports simultaneously used for EtherNet/IP communications.
*9. As the EtherNet/IP port implements the IGMP client, unnecessary multi-cast packets can be filtered by using an Ethernet switch that supports IGMP Snooping.
*10. For details on the database connection service, refer to the *NJ/NX-series Database Connection CPU Units User's Manual (Cat. No. W527)*.
*11. For details on the OPC UA server, refer to the *NJ/NX-series CPU Unit OPC UA User's Manual (Cat. No. W588)*.
*12. If set to 0 (zero), it is assumed to be 50 ms.
*13. The number of value attributes is defined by the following formula.
Number of value attributes = (Number of basic data type variables) + (Number of array-specified elements) + (Number of values in the structure)
*14. A ring topology can be used with project unit version 1.40 or later.
*15. You can check the I/O allocation status with the Sysmac Studio. Refer to the *NJ/NX-series CPU Unit Software User's Manual (Cat. No. W501)* for how to check the I/O allocation status. Also, refer to the relevant manuals for specific Units for the maximum I/O data size per NX Unit.

1-3 Overall Operating Procedure for the CPU Unit

This section gives the overall operating procedure for the NX502 CPU Unit and then describes it in more detail.

1-3-1 Overall Procedure

The overall procedure to use an NX502 CPU Unit is given below.

STEP 1. Software Design

Design the overall system configuration, task configuration, programs, and variables.

Step 1-1 Designing I/O and Processing
Step 1-2 Designing Tasks
Step 1-3 Designing Programs

STEP 2. Software Setups and Programming

Create the system configurations that you designed in step 1 on the Support Software and assign the variables. Create the tasks and programs, and debug them, e.g., with simulations.

Step 2-1 Slaves, NX Unit Configurations, and X Bus Unit Configurations
Step 2-2 Controller Setup
Step 2-3 Programming
Step 2-4 Offline Debugging

STEP 3. Mounting and Setting Hardware

Mount the Units and make the required hardware settings.

STEP 4. Wiring

Connect the network cables and wire the I/O.

STEP 5. Confirming Operation and Starting Actual System Operation

Connect the Support Software to the physical system and download the project. Check operation on the physical system and then start actual system operation.

1-3-2 Procedure Details

STEP1. Software Design

Step	Description	Reference
Step 1-1 Designing I/O and Processing	• External I/O devices and Unit configuration • Refresh periods for external devices • Program contents	*NJ/NX-series CPU Unit Software User's Manual (Cat. No. W501)*
Step 1-2 Designing Tasks	• Task configuration • Relationship between tasks and programs • Task periods • Slave, NX Unit, and X Bus Unit refresh cycles • Exclusive control methods for variables between tasks	*NJ/NX-series CPU Unit Software User's Manual (Cat. No. W501)*
Step 1-3 Designing Programs		
POU (Program Organization Unit) Design	• Programs • Functions and function blocks • Determining the algorithm languages	*NJ/NX-series CPU Unit Software User's Manual (Cat. No. W501)*
Variable Design	• Defining variables that you can use in more than one POU and variables that you use in only specific POUs • Defining the variables names for the device variables that you use to access slaves, NX Units, and X Bus Units • Defining the attributes of variables, such as the Name and Retain attributes • Designing the data types of variables	*NJ/NX-series CPU Unit Software User's Manual (Cat. No. W501)*

STEP2. Software Setups and Programming

Step	Description	Sysmac Studio Operations	Reference
Project Creation	1. Create a project in the Sysmac Studio. 2. Select a Controller.	Select **New Project** Select the device in the Project Properties Dialog Box	*Sysmac Studio Version 1 Operation Manual (Cat. No. W504)*

The following *Controller Configurations and Setup* and the *Programming and Task Settings* can be performed in either order.

Step 2-1 Slave, NX Unit, and X Bus Unit Configurations	

1) Creating the Slave, NX Unit, and X Bus Unit Configurations	1. Creating the slave configuration, NX Unit configuration, and X Bus Unit configuration either offline or online. (For online configuration, make the online connection that is described in step 5.) 2. Setting up any Slave Terminals that are used.	EtherCAT Tab Page CPU and Expansion Racks Tab Page Slave Terminal Tab Page	*NJ/NX-series CPU Unit Software User's Manual (Cat. No. W501)* *NX-series EtherCAT Coupler Units User's Manual (Cat. No. W519)*
2) Assigning Device Variables to I/O Ports	Registering device variables in variable tables (Variable names are user defined or automatically created.)	I/O Map	*NJ/NX-series CPU Unit Software User's Manual (Cat. No. W501)*

(The following step is for motion control.)

3) Creating the Axes and Assigning Them to the Servo Drive/Encoder Input Slaves	Creating the axes and setting them as real axes or virtual axes. Creating axes groups to perform interpolated axes control.	**Configurations and Setup − Motion Control Setup**	*NJ/NX-series CPU Unit Software User's Manual (Cat. No. W501)*

Step 2-2 Controller Setup	Setting the following parameters from the Sysmac Studio		
	Setting the initial values for the PLC Function Module	**Configurations and Setup − Controller Setup − Operation Settings**	*NJ/NX-series CPU Unit Software User's Manual (Cat. No. W501)* *3-1-6 Battery* on page 3-10
	Setting the battery-related error detection when the battery is mounted	**Configurations and Setup − Controller Setup − Operation Settings**	
	Setting the initial values for the NX Bus Function Module	**Configurations and Setup − CPU/Expansion Racks − CPU Rack**	
	Setting the initial values for the X Bus Function Module	**Configuration and Settings - X Bus Unit - Mounting Setting**	
	(To use motion control) Setting the initial settings for the Motion Control Function Module	**Configurations and Setup − Motion Control Setup**	
	Setting the initial values for the EtherCAT Master Function Module	**Configurations and Setup − EtherCAT**	
	Setting the initial values for the EtherNet/IP Function Module	**Configurations and Setup − Controller Setup − Built-in EtherNet/IP Port Settings**	

Step 2-3 Programming			
1) Registering Variables	• Registering the variables used by more than one POU in the global variable table with Sysmac Studio • Registering the local variable table for each program • Registering the local variable table for each function block and function	Global Variable Table Editor Local Variable Table Editor	*Sysmac Studio Version 1 Operation Manual (Cat. No. W504)* *NJ/NX-series CPU Unit Software User's Manual (Cat. No. W501)*
2) Writing Algorithms for POUs	Writing the algorithms for the POUs (programs, function blocks, and functions) in the required languages	Programming Editor	*NJ/NX-series CPU Unit Software User's Manual (Cat. No. W501)* *NJ/NX-series Instructions Reference Manual (Cat. No. W502)* *NJ/NX-series Motion Control Instructions Reference Manual (Cat. No. W508)*
3) Setting the Tasks	Making task settings	**Configurations and Setup − Task Settings**	*NJ/NX-series CPU Unit Software User's Manual (Cat. No. W501)*

Step 2-4 Offline Debugging	Checking the algorithms and task execution times on the Simulator (virtual controller)		*NJ/NX-series CPU Unit Software User's Manual (Cat. No. W501)*

STEP3. Mounting and Setting Hardware

Step	Description	Reference
1) Mounting	• Connecting adjacent Units • Mounting to DIN Track	*5-3 Mounting and Removing Units* on page 5-8
2) Setting Hardware	• Setting the node addresses of the EtherCAT slaves	Operation manuals for the EtherCAT slaves

STEP4. Wiring

Step	Description	Reference
1) Connecting the Power Supply to the CPU Unit	• Connecting the power supply and ground wires	*Section 4 Designing the Power Supply System* on page 4-1 *5-4 Wiring* on page 5-36
2) Connecting Ethernet Cable	• Connecting the built-in EtherCAT port • Connecting the built-in EtherNet/IP port	*NJ/NX-series CPU Unit Built-in EtherCAT Port User's Manual (Cat. No. W505)* *NJ/NX-series CPU Unit Built-in EtherNet/IP Port User's Manual (Cat. No. W506)*

3) Wiring I/O	• Wiring I/O for NX Units • Wiring an X Bus Unit	Manuals for the specific NX Units Manuals for the specific X Bus Units
	• Wiring I/O to EtherCAT slaves	Operation manuals for the EtherCAT slaves *5-4 Wiring* on page 5-36
4) Connecting the Computer That Runs the Sysmac Studio	• Connecting the built-in EtherNet/IP port	*Sysmac Studio Version 1 Operation Manual (Cat. No. W504)*

STEP5. Checking Operation and Starting Operation on the Actual System

Step	Description	Sysmac Studio Operations	Reference
1) Online Connection to Sysmac Studio and Project Download	Turn ON the power supply to the Controller and place the Sysmac Studio online. Then, download the project. *1 Perform this step before you create the slave configuration, NX Unit configuration, or X Bus Unit configuration from the mounted Units in step 2-1.	**Controller − Communications Setup** **Controller − Synchronization**	*NJ/NX-series CPU Unit Software User's Manual (Cat. No. W501)*
2) Clock Data Setting	Set the clock data with the clock function when the battery is mounted or when the battery-free operation is performed.	**Controller − Controller Clock**	*NJ/NX-series CPU Unit Software User's Manual (Cat. No. W501)*
3) Operation Check on Controller	1. Check the wiring by using forced refreshing of real I/O from the I/O Map or Watch Tab Page. 2. For motion control, use the MC Test Run operations in PROGRAM mode to check the wiring. Then check the motor rotation directions for jogging, travel distances for relative positioning (e.g., for electronic gear settings), and homing operation. 3. Change the Controller to RUN mode and check the operation of the user program.	---	*NJ/NX-series CPU Unit Software User's Manual (Cat. No. W501)*
4) Actual Controller Operation	Start actual operation.	---	---

*1. Use the Synchronize Menu of the Sysmac Studio to download the project.

2

System Configuration

This section describes the basic system configuration used for NX-series Controllers.

2-1 Basic System Configuration 2-2
2-1-1 EtherCAT Network Configuration 2-3
2-1-2 NX Unit Configuration 2-4
2-1-3 X Bus Unit Configuration 2-5
2-2 Connecting to the Sysmac Studio 2-8
2-3 Network Configuration 2-9

2-1 Basic System Configuration

An NX-series Controller NX502 supports the following two types of configurations.

- Basic Configuration
  The basic configurations include the CPU Unit and the Configuration Units that are controlled directly by the CPU Unit. The followings are basic configurations.
  a) EtherCAT network configuration
  b) NX Unit configuration
  c) X Bus Unit configuration
- Other Network Configurations
  These are the configurations of the systems that are connected to the CPU Unit's built-in EtherNet/IP ports and Communications Units.

Basic Controller Configuration

● EtherCAT Network Configuration

With an NX-series CPU Unit, you can use an EtherCAT network as a basic system.
With the EtherCAT network system of the NX-series CPU Unit, the period for sequence processing and motion processing in the CPU Unit is the same as the EtherCAT communications period.
This enables high-precision sequence control and motion control with a constant period and little fluctuation.
For information on EtherCAT, refer to the *NJ/NX-series CPU Unit Built-in EtherCAT Port User's Manual* (Cat. No. W505).

● NX Unit Configuration

The CPU Rack consists of the following items.

- NX502 CPU Unit
- NX Unit NX-□□□□□□□
- End Cover NX-END02

Up to 63 NX Units can be connected.
By using the NX Units that support synchronous I/O refreshing, all I/O refreshing is synchronized with the task period of the primary periodic task of the CPU Unit.
This enables high-precision synchronized control with a stable fixed period.

● X Bus Unit Configuration

The CPU Rack consists of the following items.

- NX502 CPU Unit
- X Bus Unit NX-EIP201, etc.

Up to four X Bus Units can be connected.
The X Bus Unit power is supplied directly from the Unit power supplied to the CPU Unit. A total of 50 W of DC power can be supplied. Therefore, external power supply is not required.

2-1-1 EtherCAT Network Configuration

The EtherCAT network configuration consists of an NX-series NX502 CPU Unit, an End Cover, and the EtherCAT slaves.
You use the built-in EtherCAT port on the NX-series NX502 CPU Unit to connect EtherCAT slaves.

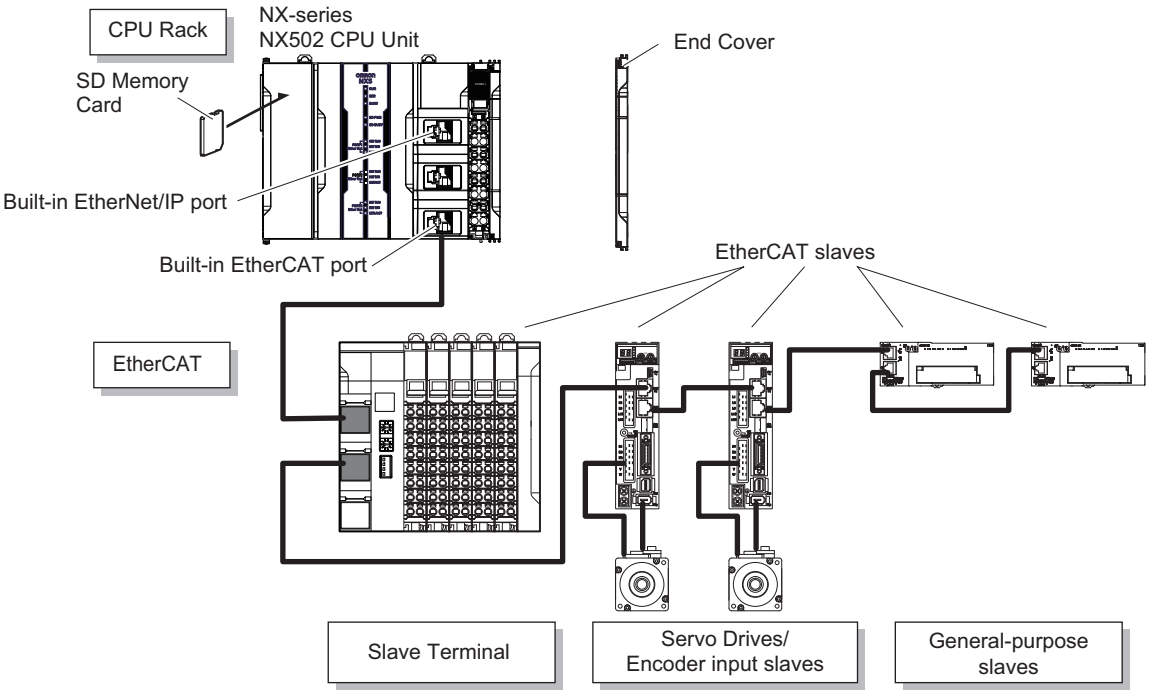

For information on the system configuration of an EtherCAT network, refer to the *NJ/NX-series CPU Unit Built-in EtherCAT Port User's Manual* (Cat. No. W505).
Refer to *2-1-2 NX Unit Configuration* on page 2-4 for information on the CPU Unit and End Cover.

2-1-2 NX Unit Configuration

The following shows the configuration of NX Units.

CPU Rack

The CPU Rack consists of an NX-series NX502 CPU Unit, NX Units, and an End Cover.
Up to 63 NX Units can be connected.

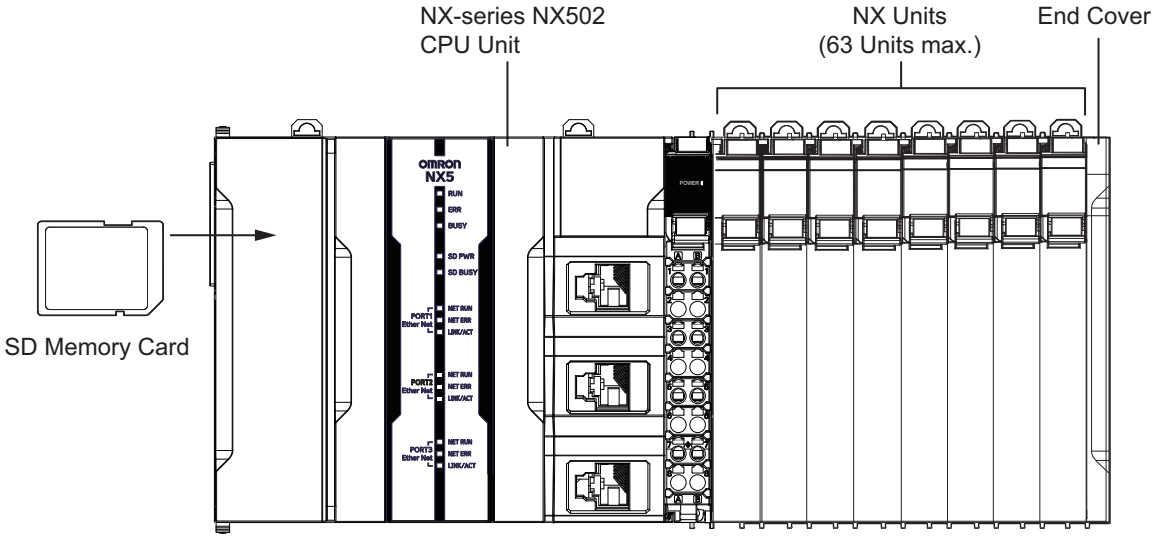

Series	Configuration		Remarks
NX-series	NX-series NX502 CPU Unit		One required for every CPU Rack.
	End Cover		Must be connected to the right end of the CPU Rack. One End Cover is provided with the CPU Unit.
	NX Units	Digital I/O Unit	Up to 63 Units can be mounted to each CPU Rack. Refer to *A-5 Support Functions of the CPU Units and Restrictions on the NX Units* on page A-8 for information such as restrictions on the NX Units. For information on the most recent lineup of NX Units, refer to NX-series catalogs or OMRON websites, or ask your OMRON representative.
		Analog I/O Unit	
		System Unit	
		Position Interface Unit	
		Communications Interface Unit	
		Load Cell Input Unit	
NJ/NX-series	SD Memory Card		Install as required.

Configuration Units

● NX-series NX502 CPU Unit

The Unit that serves as the center of control for a Machine Automation Controller. It executes tasks, refreshes I/O for other Units and slaves, etc. In the NX-series, this type of Units is called NX502 CPU Unit.
Refer to *3-1 CPU Units* on page 3-2 for the models and specifications of individual NX-series NX502 CPU Unit.

● End Cover

A cover to protect the NX Unit and CPU Unit. This is provided with the CPU Unit. The model number is NX-END02.

● NX Unit

The NX Units perform I/O processing with connected external devices. These Units are NX-series NX-□□□□□□ Units.
Up to 63 NX Units can be connected to the CPU Unit.
Refer to *A-5 Support Functions of the CPU Units and Restrictions on the NX Units* on page A-8 for information such as restrictions on the NX Units.

● Recommended Communications Cables for EtherCAT and EtherNet/IP

EtherCAT communications are performed in accordance with the 100BASE-TX standard. Refer to the *NJ/NX-series CPU Unit Built-in EtherCAT Port User's Manual* (Cat. No. W505) for recommended cables.

EtherNet/IP communications are performed in accordance with the 1000BASE-T, 100BASE-TX, or 10BASE-T standard.
Refer to the *NJ/NX-series CPU Unit Built-in EtherNet/IP Port User's Manual (Cat. No. W506)* for recommended cables.

● SD Memory Card

With the NX-series NX502 CPU Unit, various data can be saved, backed up, restored, and compared using the SD Memory Card.
Refer to *3-2 SD Memory Cards* on page 3-13 for the models and specifications of individual SD Memory Cards.

2-1-3 X Bus Unit Configuration

The following shows the configuration of X Bus Units.

CPU Rack

The CPU Rack consists of an NX-series NX502 CPU Unit and X Bus Units.
Up to four X Bus Units can be connected.

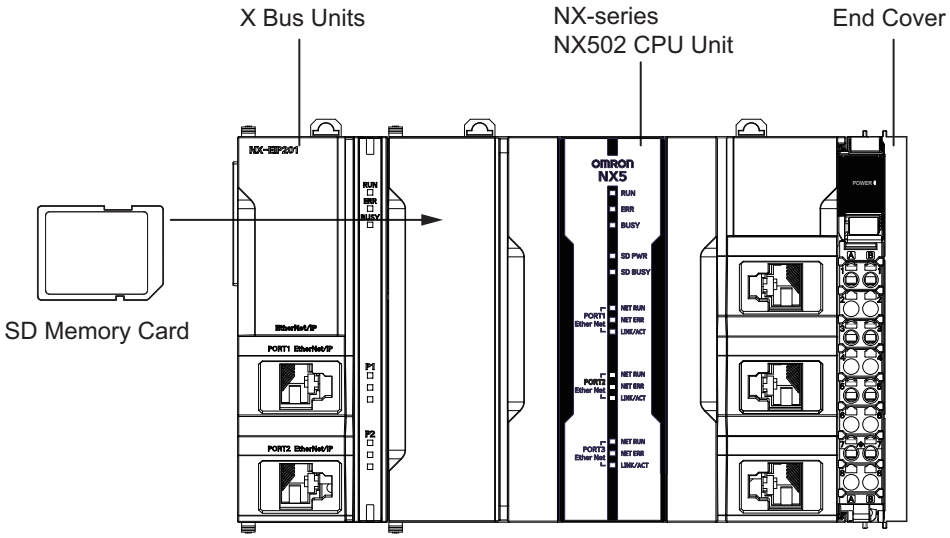

Series	Configuration		Remarks
NX-series	NX-series NX502 CPU Unit		One required for every CPU Rack.
	X Bus Units	EtherNet/IP Unit	Up to four Units can be mounted to each CPU Rack. For information on the latest lineup of X Bus Units, refer to the relevant catalogs or OMRON websites, or ask your OMRON representative.
NJ/NX-series	SD Memory Card		Install as required.

Configuration Units

● NX-series NX502 CPU Unit

The Unit that serves as the center of control for a Machine Automation Controller. It executes tasks, refreshes I/O for other Units and slaves, etc. In the NX-series, this type of Units is called NX502 CPU Unit.

Refer to *3-1 CPU Units* on page 3-2 for the models and specifications of individual NX-series NX502 CPU Unit.

● X Bus Unit

The X Bus Units are used to connect with large capacity data communications.

Up to four X Bus Units can be connected to the CPU Unit.

The X Bus Unit power is supplied directly from the Unit power supplied to the CPU Unit. A total of 50 W of DC power can be supplied. Therefore, external power supply is not required.

● Recommended Communications Cables for EtherNet/IP

EtherNet/IP communications are performed in accordance with the 1000BASE-T, 100BASE-TX, or 10BASE-T standard.

Refer to the *NX-series EtherNet/IP Unit User's Manual (Cat. No. W627)* for recommended cables.

● SD Memory Card

With the NX-series NX502 CPU Unit, various data can be saved, backed up, restored, and compared using the SD Memory Card.

Refer to *3-2 SD Memory Cards* on page 3-13 for the models and specifications of individual SD Memory Cards.

2-2 Connecting to the Sysmac Studio

Connect the NX-series NX502 CPU Unit and the Sysmac Studio through EtherNet/IP.
Refer to *3-6-2 Connection* on page 3-17 for information on how to make the connection between the NX-series NX502 CPU Unit and the Sysmac Studio.

2-3 Network Configuration

You can make networks in the following layers with an NJ/NX-series Controller.
For details on communications networks that you can connect to, refer to the *NJ/NX-series CPU Unit Software User's Manual (Cat. No. W501)*.

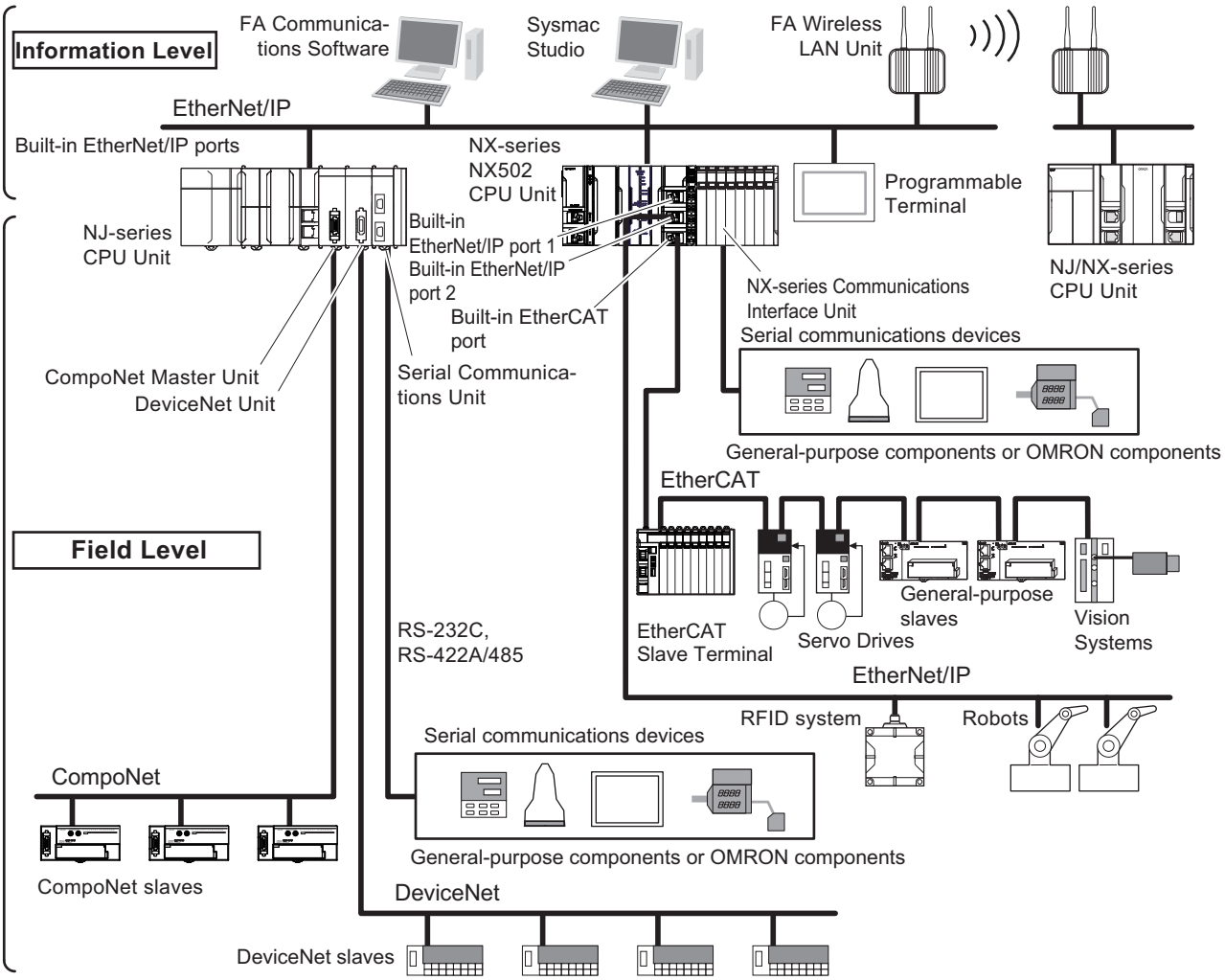

Connection		Connection method
Sysmac Studio		Use the built-in EtherNet/IP port (1 or 2) or an EtherNet/IP Unit.*1
Between Controllers	NJ/NX-series Controller or CJ-series PLC	Use the built-in Ethernet/IP port (1 or 2) or a port on an EtherNet/IP Unit.*1

Connection		Connection method
Devices	Servo Drives, general-purpose slaves and Vision Systems	Use the built-in EtherCAT port.
	Ethernet communications devices	Use the built-in Ethernet/IP port (1 or 2) or a port on an EtherNet/IP Unit.*1
	Serial communications devices	Mount the following Units and use RS-232C port or RS-422A/485 ports. • CJ-series Serial Communications Unit*2 • NX-series Communications Interface Unit*3
	DeviceNet slaves	Mount a CJ-series DeviceNet Unit*2 and use DeviceNet.
	CompoNet slaves	Mount a CJ-series CompoNet Master Unit*2 and use CompoNet.
Programmable Terminals		Use the built-in EtherNet/IP port (1 or 2) or a port on an EtherNet/IP Unit.*1
Servers	Connections to BOOTP server, DNS server, or NTP server	Use the built-in Ethernet/IP port (1 or 2) or a port on an EtherNet/IP Unit.*1

*1. Use an X Bus Unit.
*2. Mount to an NJ-series CPU Unit.
*3. Mount the Unit to the NX-series NX502 CPU Unit.

3

Configuration Units

This section describes configuration devices in the NX-series Controller configuration.

3-1 CPU Units 3-2
- 3-1-1 Models and Specifications 3-2
- 3-1-2 Part Names and Functions 3-4
- 3-1-3 DIP Switch 3-5
- 3-1-4 Operation Status Indicators 3-6
- 3-1-5 Terminal Blocks 3-9
- 3-1-6 Battery 3-10
- 3-1-7 ID Information Indication 3-12

3-2 SD Memory Cards 3-13
- 3-2-1 Models and Specifications 3-13
- 3-2-2 Purpose 3-13

3-3 Power Supply-related Units 3-14

3-4 NX Units 3-15

3-5 X Bus Units 3-16

3-6 Sysmac Studio 3-17
- 3-6-1 Model Numbers 3-17
- 3-6-2 Connection 3-17

3-1 CPU Units

This section describes the models and specifications of the CPU Units as well as the names and functions of the parts.

3-1-1 Models and Specifications

This section describes the outline of the CPU Unit specifications. The electrical and mechanical specifications of the CPU Unit are also given. Refer to *1-2 Specifications* on page 1-10 for information on other main specifications.

Models and Outline of Specifications

The models and outline of specifications are given below.

Model	Program capacity	Memory capacity for variables	Maximum number of controlled axes (Maximum number of used real axes)	Database connection
NX502-1500	80 MB	4 MB (Retained during power interruptions) or 256 MB (Not retained during power interruptions)	128 axes (64 axes)	Supported
NX502-1400			64 axes (32 axes)	
NX502-1300			32 axes (16 axes)	

Electrical and Mechanical Specifications

The electrical and mechanical specifications are given below.

Item		Specification
Model		NX502-□□□□
Enclosure		Mounted in a panel
Dimensions (mm)*1		135 × 100 × 120 mm (W×H×D)
Weight*2		920 g max.
Unit power supply	**Power supply voltage**	24 VDC (20.4 to 28.8 VDC)
	Unit power consumption*3	18.3 W max.
	Inrush current*4	For cold start at room temperature: 10 A max./0.1 ms max. 2.5 A max./500 ms max.
	Current capacity of power supply terminal*5	4 A max.
	Isolation method	No isolation: between the Unit power supply terminal and internal circuit
Power supply to the NX Unit power supply	**NX Unit power supply capacity**	10 W max.
	NX Unit power supply efficiency	80%
	Isolation method	No isolation: between the Unit power supply terminal and NX Unit power supply

Item		Specification
I/O Power Supply to NX Units		Not provided*6
Power supply to the X Bus Unit power supply*7	**X Bus Unit power supply capacity**	50 W max.
	Isolation method	No isolation: between the Unit power supply terminal and X Bus Unit power supply
External connection terminals	**Communications connector**	RJ45 for Ethernet Communications × 2 RJ45 for EtherCAT Communications × 1
	Screwless clamping terminal block	For Unit power supply input and grounding (Removable)
	Output terminal (service supply)	Not provided
	RUN output terminal	Not provided
	NX bus connector	63 NX Units can be connected

*1. Includes the End Cover (NX-END02), and does not include projecting parts.
*2. Includes the End Cover (NX-END02). The weight of the End Cover is 82 g.
*3. Includes an SD Memory Card. The NX Unit power consumption to NX Units is not included.
*4. The inrush current that occurs when the supplied power is changed to ON from a continuous OFF state. The inrush current may vary depending on the operating condition and other conditions. Therefore, select fuses, breakers, and external power supply devices that have enough margin in characteristic and capacity, considering the condition under which the devices are used.
In particular, in case when you insert a switch to turn ON/OFF the DC power supplied from an external power supply, if the duration of an ON-OFF-ON cycle is one second or less, the inrush control circuit may not function, which cause an inrush current of approximately 30 A/0.3 ms.
*5. The amount of current that can be passed constantly through the terminal. Do not exceed this current value when you use a through-wiring for the Unit power supply.
*6. When the type of the I/O power supply to NX Units you use is the supply from NX bus, an Additional I/O Power Supply Unit is required. Refer to *4-3 Designing the I/O Power Supply System* on page 4-14 for details.
*7. The X Bus Unit power is supplied directly from the Unit power (24 VDC) supplied to the CPU Unit. Since the voltage is not transformed in the CPU Unit, there is no definition of supply efficiency.

3-1-2 Part Names and Functions

This section explains parts of the CPU Unit and their functions.

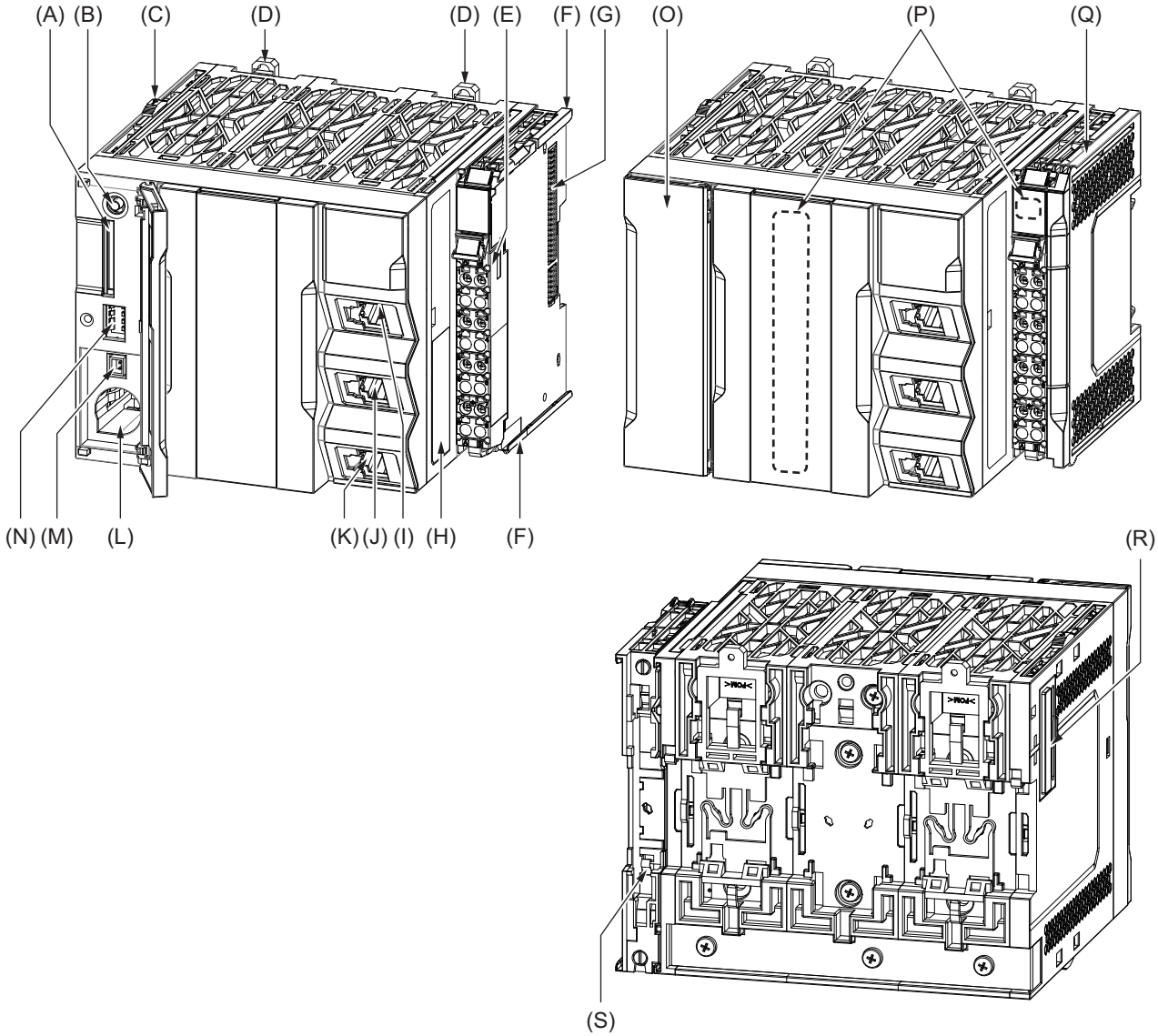

Letter	Name	Function
A	SD Memory Card connector	Connects the SD Memory Card to the CPU Unit.
B	SD Memory Card power supply switch	Turns OFF the power supply so that you can remove the SD Memory Card. *5-3-9 Installing and Removing the SD Memory Card* on page 5-24
C	Slider	The slider is used to slide the X Bus Unit when installing or removing.
D	DIN Track mounting hooks	These hooks are used to mount the CPU Unit to a DIN Track.
E	Terminal block	The terminal block is used for wiring for the Unit power supply and grounding cable.
F	Unit hookup guides	These guides are used to mount an NX Unit or the End Cover.
G	NX bus connector	This connector is used to connect the CPU Unit to the NX Unit on the right of the CPU Unit.

Letter	Name	Function
H	ID information indication	Shows the ID information of the CPU Unit. *3-1-7 ID Information Indication* on page 3-12
I	Built-in EtherNet/IP port (port 1)	Connects the Ethernet with an Ethernet cable. Use port 1 to perform OPC UA communications.
J	Built-in EtherNet/IP port (port 2)	
K	Built-in EtherCAT port (port 3)	Connects the EtherCAT with an Ethernet cable.
L	Battery slot	Allows a separately-sold backup battery to be mounted into the CPU Unit.
M	Battery connector	Connects a separately-sold backup battery to the CPU Unit.
N	DIP switch	Used in Safe Mode or when backing up data. Normally, turn OFF all of the pins.
O	SD Memory Card cover	A cover for the SD Memory Card and the DIP switch. It opens toward the right.
P	Operation Status Indicators	Shows the operation status of the CPU Unit by multiple indicators. *3-1-4 Operation Status Indicators* on page 3-6
Q	End Cover	A cover to protect the NX Unit and CPU Unit. One End Cover is provided with the CPU Unit.
R	X Bus connector	This connector is used to connect the CPU Unit to the X Bus Unit on the left of the CPU Unit.
S	DIN Track contact plate	This plate is used to contact the functional ground terminal with a DIN Track.

3-1-3 DIP Switch

Set the DIP switch when backing up data or using Safe Mode, etc. The meanings of each function, DIP switch settings, and reference manuals are shown in the table below. If you do not want to use these functions, turn OFF all pins.
The figure below shows an example setting when the Safe Mode is used.

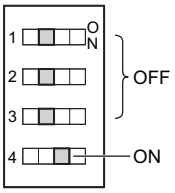

Function	Meaning	DIP switch				Reference manual
		4	3	2	1	
Backup	You can back up all of the data in the Controller to an SD Memory Card.	OFF	ON	OFF	OFF	NJ/NX-series CPU Unit Software User's Manual (Cat. No. W501)
Restore*1	You can transfer the various setting data stored in the SD Memory Card to the Controller.	ON	ON	OFF	OFF	
Automatic transfer from SD Memory Card*1	You can automatically transfer the various setting data stored in the SD Memory Card to the Controller when the power is turned ON.	OFF	OFF	ON	OFF	

Function	Meaning	DIP switch				Reference manual
		4	3	2	1	
Safe Mode*1	You can start the Unit in PROGRAM mode when the power is turned ON. Use the Safe Mode if you do not want to execute the user program immediately after the power is turned ON, or if it is difficult to connect the Sysmac Studio.	ON	OFF	OFF	OFF	NJ/NX-series Troubleshooting Manual (Cat. No. W503)

*1. This function operates when the power supply to the CPU Unit is turned ON after you change the DIP switch settings. If you want to use this function, turn ON power to the CPU Unit after you change the DIP switch settings.

3-1-4 Operation Status Indicators

There are the indicators to show the operation status of CPU Unit in the center of the front side of the CPU Unit.

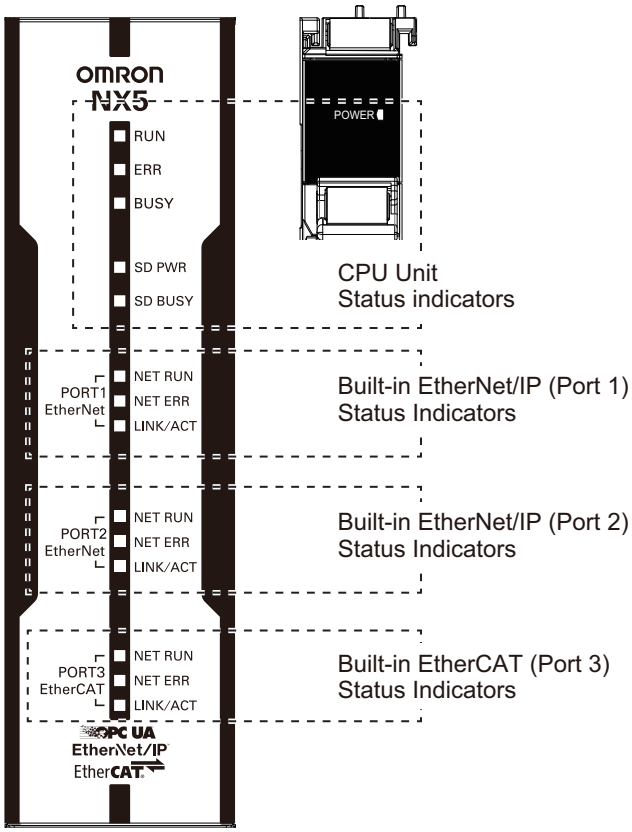

● CPU Unit Status Indicators

These indicators show the main operation status of the CPU Unit.

The following table describes these indicators.

Indicator	Color	Status		Meaning
POWER	Green		Lit.	Power is ON.
			Not lit.	Power is not ON. Or, the power supply voltage is outside the allowable voltage range.
RUN	Green		Lit.	The CPU Unit is in normal operation in RUN mode. (The user program is in execution.)
			Flashing at 2-s intervals, then flashing at 0.5-s intervals.	The CPU Unit is starting (entering RUN mode or PROGRAM mode at startup).
			Flashing at 2-s intervals continues for 30 seconds or longer.	System initialization error occurs.
			Not lit.	Operation is stopped in PROGRAM mode, when a CPU Unit reset is in progress, or when any of the following errors occurs. • Controller error in the major fault level • CPU error (WDT error)
ERROR	Red		Lit.	Self-diagnosis found one of the following errors. • Controller error in the major fault level • CPU error
			Flashing at 1-s intervals.	Self-diagnosis found one of the following errors. • Controller error in the partial fault level (an error in which all control of a Function Module is disabled) • Controller error in the minor fault level (an error in which partial control of a Function Module is disabled) CPU Unit operation will continue for either of these errors. Operation will stop for the Function Module in which a Controller error in the partial fault level occurred. Operation will continue for the Function Module in which a Controller error in the minor fault level occurred.
			Not lit.	The CPU Unit is in normal operation, a CPU reset is in progress, or monitored information occurred (CPU Unit operation will continue.).
BUSY	Yellow		Flashing	Built-in non-volatile memory access in progress.
			Not lit.	Other than the above.
SD PWR	Green		Lit.	Power is being supplied to the SD Memory Card and the SD Memory Card can be used.
			Flashing	A backup, restore or verification operation is in progress.*1
			Not lit.	The power supply for the SD Memory Card is stopped, an SD Memory Card is not mounted, or the file format of the mounted SD Memory Card is not supported.

Indicator	Color	Status		Meaning
SD BUSY	Yellow		Flashing	SD Memory Card access in progress.
			Not lit.	SD Memory Card access not in progress.

*1. Refer to the *NJ/NX-series CPU Unit Software User's Manual (Cat. No. W501)* for details on backing up data.

Precautions for Safe Use

- Never turn OFF the power supply to the Controller when the BUSY indicator is flashing. While the BUSY indicator is lit, the user program and settings in the CPU Unit are being backed up in the built-in non-volatile memory. This data will not be backed up correctly if the power supply is turned OFF. Also, a major fault level Controller error will occur the next time you start operation, and operation will stop.
- Do not turn OFF the power supply or remove the SD Memory Card while SD Memory Card access is in progress (i.e., while the SD BUSY indicator flashes). Data may become corrupted, and the Controller will not operate correctly if it uses corrupted data. To remove the SD Memory Card from the CPU Unit while the power supply is ON, press the SD Memory Card power supply switch and wait for the SD BUSY indicator and SD PWR indicator to turn OFF before you remove the SD Memory Card.

You can check the operation status of the CPU Unit with the CPU Unit status indicators (POWER, RUN, and ERROR indicators).
Refer to the *NJ/NX-series Troubleshooting Manual (Cat. No. W503)* for the procedures to check the operation status of the CPU Unit.

● Built-in EtherNet/IP (Port 1/Port 2) Status Indicators

These indicators show the operation status of the built-in EtherNet/IP port of the CPU Unit.
The indicator name and other information are the same for port 1 and port 2.

Indicator	Color	Status		Meaning
NET RUN	Green		Lit.	Normal startup status.
			Flashing	Ethernet communications are in progress. • Tag data link connection establishment in progress. • IP address acquisition with BOOTP in progress.
			Not lit.	You cannot perform Ethernet communications. • The power supply is OFF or the CPU Unit was reset. • A MAC address error or communications Controller error occurred.
NET ERR	Red		Lit.	An error for which the user cannot recover operation occurred. • A MAC address error or communications Controller error occurred.
			Flashing	An error for which the user can recover operation occurred. • An error occurred in TCP/IP communications or CIP communications. • FTP server setting error, NTP server setting error, etc. • Tag data link setting error, tag data link verification error, etc.
			Not lit.	There are no Ethernet communications errors. • The power supply is OFF or the CPU Unit was reset.

Indicator	Color	Status		Meaning
LINK/ACT	Yellow		Lit.	The link was established.
			Flashing	The link is established, and data communications are in progress.
			Not lit.	A link was not established. • The cable is not connected. • The power supply is OFF or the CPU Unit was reset.

● Built-in EtherCAT (Port 3) Status Indicators

These indicators show the operation status of the built-in EtherCAT port of the CPU Unit.

Indicator	Color	Status		Meaning
NET RUN	Green		Lit.	EtherCAT communications are in progress. • Inputs and outputs for I/O data are in operation.
			Flashing	EtherCAT communications are established. This indicator shows either of the following conditions. • Only message communications are in operation. • Only message communications and I/O data inputs are in operation.
			Not lit.	EtherCAT communications are stopped. • The power supply is OFF or the CPU Unit was reset. • A MAC address error, communications Controller error, or other error occurred.
NET ERR	Red		Lit.	A hardware error or unrecoverable error occurred, such as for exception processing.
			Flashing	A recoverable error occurred.
			Not lit.	There are no errors.
LINK/ACT	Yellow		Lit.	A link is established.
			Flashing	Data communications are in progress after establishing link. Flashes every time data is sent or received.
			Not lit.	The link was not established.

3-1-5 Terminal Blocks

The terminal blocks on the CPU Unit are removable screwless clamping terminal blocks that allow you to easily connect and remove the wiring.

Connect the Unit power supply and ground lines to the screwless clamping terminal block.

Terminal Block Part Names and Functions

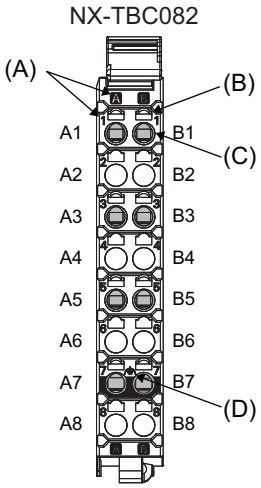

8-terminal type

Letter	Name	Function
(A)	Terminal number indication	Indicates the terminal numbers (A1 to A8 and B1 to B8). The terminal number indication is the same regardless of the number of terminals on the terminal block.
(B)	Release hole	Insert a flat-blade screwdriver into this hole when you connect or remove the wire.
(C)	Terminal hole	The wire is inserted into this hole.
(D)	Ground terminal mark	This symbol indicates that it is the ground terminal.

Refer to *5-4-1 Wiring the Unit Power Supply* on page 5-36 and *5-4-8 Wiring to the CPU Unit Terminal Block* on page 5-42 for the wiring procedure.
There are three types of terminal blocks: 8-terminal type, 12-terminal type, and 16-terminal type.
Only the 8-terminal type terminal block can be attached to the NX502 CPU Units.
To prevent mis-insertion, the terminal blocks other than of the 8-terminal type cannot be used.

Additional Information

No terminal and release holes with the numbers A2, A4, A6, A8, B2, B4, B6, and B8 are provided for the 8-terminal type terminal block.

3-1-6 Battery

The battery is not mounted when the product is shipped.
You need to prepare a battery for the CPU Unit to retain the clock data while the CPU Unit is left powered off for a long period of time.
The following describes the purpose of the battery mounting, the battery model, and the battery-related error detection and clock data settings.

Purpose of the Battery Mounting

The battery is used to retain the clock data while the power is not supplied to the CPU Unit. The clock data is retained by the built-in capacitor whether the battery is mounted or not, but the retention period depends on the continuous power-ON time of the CPU Unit, as shown below.

Continuous power-ON time of CPU Unit*1	Retention period during no power supply at an ambient temperature of 40°C
100 hours	Approx. 10 days
8 hour	Approx. 8 days
1 hour	Approx. 7 days

*1. This is equivalent to the time to charge a built-in capacitor in which no electric charge is accumulated.

When you use the clock data for programming, use a battery if you cannot ensure the continuous power-ON time shown above or the power-OFF time is longer than the above power-ON time.

The following data (other than the clock data) is retained in the built-in non-volatile memory, so they are not lost even if the battery and built-in capacitor are fully discharged.

- User program
- Set values
- Variables retained during power interruption
- Event logs

Battery Model

The table below shows the model and specifications of the battery that can be used.

Model	Appearance	Specification
CJ1W-BAT01	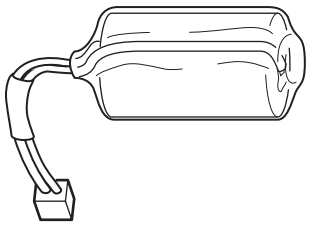	Service life: 5 years For the battery lifetime, refer to *Battery Service Life and Replacement Period* on page 7-7. The clock information is retained during power interruptions.

Battery-related Error Detection and Clock Data Settings

Because the CPU Unit is shipped with the battery not mounted, the **Battery-related error detection** is set to **Do not use** by default.
The behavior of the CPU Unit when a battery-related error is detected depends on whether battery error detection is used or not used as shown in the table below.
When the battery is mounted, you can set the **Battery-related error detection** to **Use** to detect battery errors.
When the battery is not mounted, you can set the **Battery-related error detection** to **Do not use** to suppress battery errors.

Cause of error	What is affected	Setting for the Battery-related error detection	
		Use	Do not use
One of the following was detected at power ON. • Built-in capacitor discharged • Battery not mounted • Mounted battery discharged	Clock data	• In case of clock oscillator stopping Time measurement starts from January 1st, 1970. • In case of low battery voltage Time measurement continues.	
	Error detection	The following error is detected. • Low Battery Voltage • Real-Time Clock Stopped	No error is detected.
One of the following was detected after power ON. • Battery was removed • Mounted battery discharged	Clock data	Time measurement continues.	
	Error detection	The following error is detected. • Low Battery Voltage	No error is detected.

When you mount the battery, set the **Battery-related error detection** to **Use**.
The measurement of clock data starts from January 1st, 1970 if the clock oscillator stops. If this occurs, readjust the CPU Unit's clock data to the current time.
In order to use the clock data for programming, you need to use system-defined variables to read the presence or absence of the *Low Battery Voltage* and *Real-Time Clock Stopped* errors and confirm that the clock data is normal.
Refer to the *Sysmac Studio Version 1 Operation Manual (Cat. No. W504)* for battery-related error detection and clock data settings.

3-1-7 ID Information Indication

You can check the followings in the ID information indications on the right side of the CPU Unit.

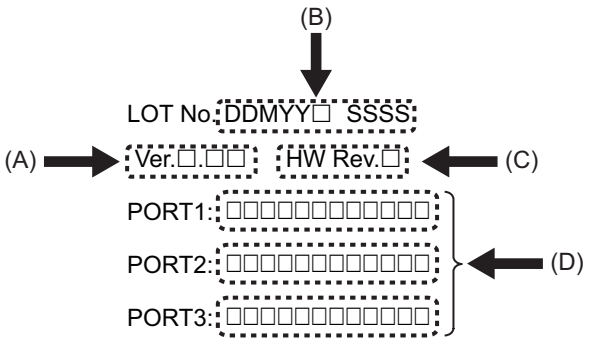

Letter	Name	Function
A	Unit version	Shows the unit version of the CPU Unit.
B	Lot number and serial number	Shows the lot number and the serial number of the CPU Unit. DDMYY: Lot number, □: For use by OMRON, SSSS: Serial number M is 1 to 9 for January to September, X for October, Y for November, and Z for December.
C	Hardware revision	Shows the hardware revision of the CPU Unit.
D	MAC addresses	Shows the MAC addresses of PORT1, PORT2, and PORT3 on this Unit.

3-2 SD Memory Cards

This section describes the models, specifications, and application of the SD Memory Cards.

3-2-1 Models and Specifications

Refer to *Specification of Supported SD Memory Cards, Folders, and Files* in the *NJ/NX-series CPU Unit Software User's Manual (Cat. No. W501)* for details.

3-2-2 Purpose

You can use the SD Memory Card for the following applications.

- Read and write files in the SD Memory Card with instructions.
- Read and write files in the SD Memory Card from an FTP client on EtherNet/IP.
- Back up, restore, and verify data in the Controller.
- Transfer data from the SD Memory Card to the Controller when the power is turned ON.

Refer to the *NJ/NX-series CPU Unit Software User's Manual (Cat. No. W501)* for details on the functions for SD Memory Cards.

3-3 Power Supply-related Units

The following NX Units are the NX-series power supply-related Units. When configuring NX Units, you can use these Units as necessary to supply power to the NX Units. These NX Units are collectively called as the System Units.

- Additional NX Unit Power Supply Unit
- Additional I/O Power Supply Unit
- I/O Power Supply Connection Unit

Refer to *4-1-2 NX-series Power Supply-related Units* on page 4-4 for details on the functions of NX-series power supply-related Units.

3-4 NX Units

The NX Units perform I/O processing with connected external devices. The NX Units refers to NX-series NX-□□□□□□ Units.
Up to 63 NX Units can be connected to the CPU Unit.

The following is an example of NX Unit's part names and functions.
For details on the part names and functions of NX Units, refer to the user's manual for each NX Unit.

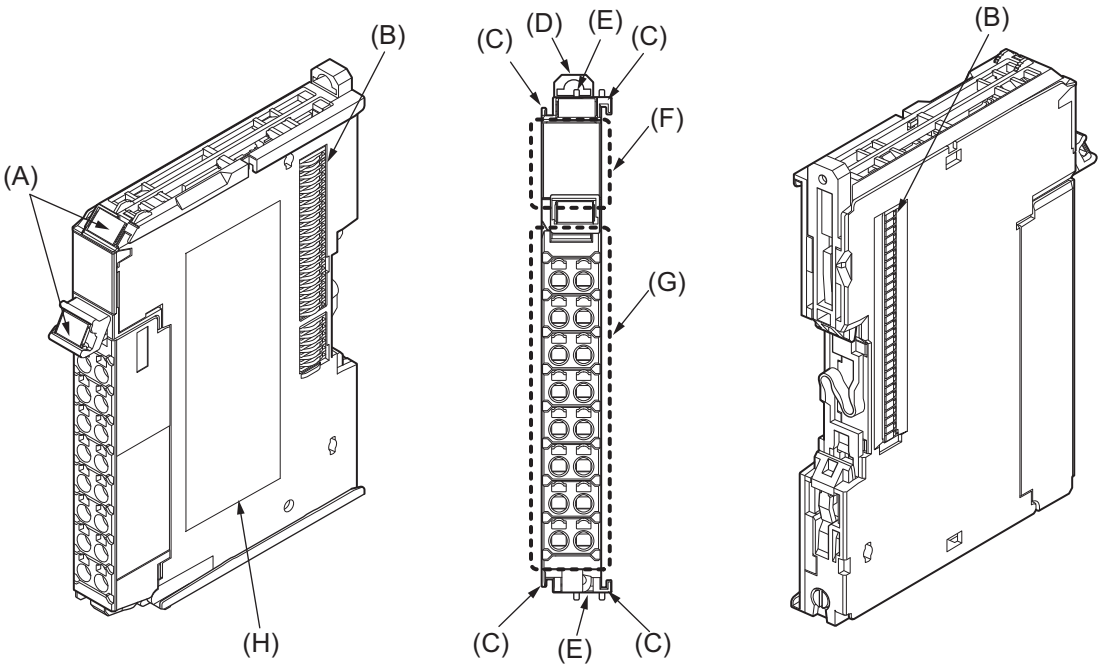

Symbol	Name	Function
A	Marker attachment location	The locations where markers are attached. OMRON markers are pre-installed at the factory. You can also install commercially available markers.
B	NX bus connector	This connector is used to connect another Unit.
C	Unit hookup guides	These guides are used to connect two Units.
D	DIN Track mounting hook	This hook is used to mount the NX Unit to a DIN Track.
E	Protrusions for removing the Unit	The protrusions to hold when removing the Unit.
F	Indicators	The indicators show the current operating status of the Unit.
G	Terminal block	The terminal block is used to connect external devices. The number of terminals depends on the type of Unit.
H	Unit specifications	The specifications of the Unit are given here.

3-5 X Bus Units

The X Bus Units are used to connect with large capacity data communications.
Up to four X Bus Units can be connected to the CPU Unit.
The X Bus Unit power is supplied directly from the Unit power supplied to the CPU Unit. A total of 50 W of DC power can be supplied. Therefore, external power supply is not required.

The following is an example of X Bus Unit's part names and functions with the EtherNet/IP Unit.
For details on the part names and functions of X Bus Units, refer to the user's manual for each X Bus Unit.

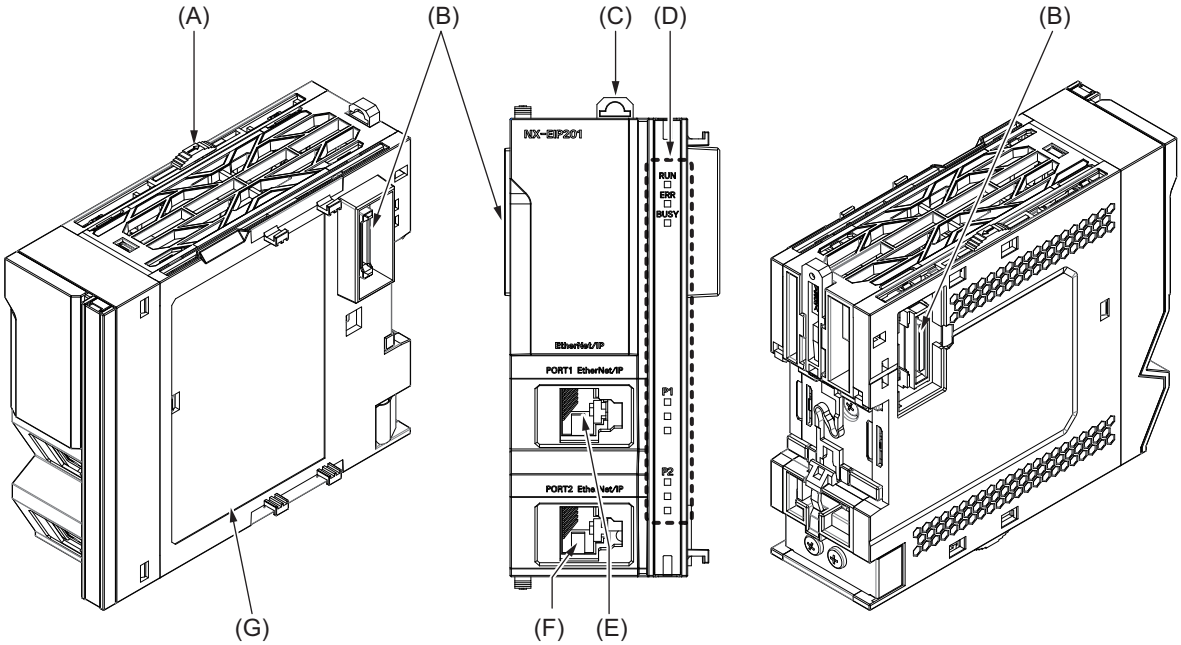

Symbol	Name	Function
A	Slider	The slider is used to slide the X Bus Unit when installing or removing.
B	X Bus connector	This connector is used to connect with the CPU Units or other X Bus Units.
C	DIN Track mounting hook	This hook is used to mount the CPU Unit to a DIN Track.
D	Operation Status Indicators	The indicators show the current operating status of the Unit.
E	EtherNet/IP port (port 1)	They are communications ports for EtherNet/IP connection.
F	EtherNet/IP port (port 2)	
G	Unit specifications	The specifications of the Unit are given here.

3-6 Sysmac Studio

The Sysmac Studio is a Support Software package that provides an integrated development environment to design, program, debug, and maintain NJ/NX-series Controllers.
This section describes the models and connecting methods of the Sysmac Studio.

3-6-1 Model Numbers

The model numbers of the Sysmac Studio are given in the following table. The model numbers are different for the media and licenses.

Product	Configuration software	Media	Number of user licenses	Model
Sysmac Studio Standard Edition	Sysmac Studio The following Support Software is also included. Network Configurator CX-Integrator CX-Protocol CX-Designer	DVD	---	SYSMAC-SE200D
		Licenses	1	SYSMAC-SE201L
			3	SYSMAC-SE203L
			10	SYSMAC-SE210L

3-6-2 Connection

With an NX502 CPU Unit, you can connect the Sysmac Studio online in the following ways.

Configuration

● Connection with EtherNet/IP

- 1:1 Connection

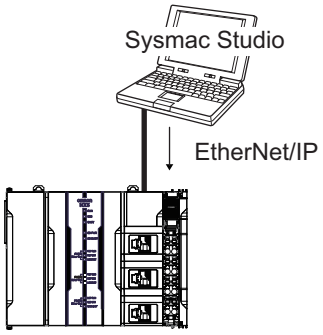

- A direct connection is made from the computer that runs Sysmac Studio. You do not need to specify the IP address or connection device. *1
- You can make the connection whether or not an Ethernet switch is used.
- Support for Auto-MDI enables the use of cross cables or straight cables if a direct connection is made.

- 1:N Connection

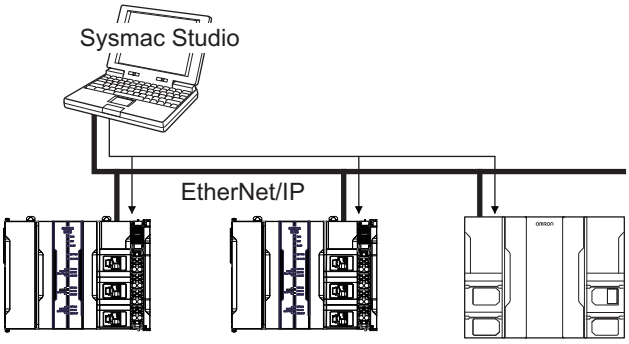

- Directly specify the IP address of the remote device.
- It is also possible to connect via NX-series EtherNet/IP Units.

*1. This function is available only when you connect Sysmac Studio to the built-in EtherNet/IP port (PORT1).

Additional Information

The Sysmac Studio cannot connect online to an NJ/NX-series CPU Unit in the following type of configuration.

- If the built-in EtherNet/IP port is not used, you cannot connect to an NJ/NX-series CPU Unit on an EtherNet/IP network.

Example: Connection to NJ/NX-series CPU Unit Routing through an EtherNet/IP Unit or Built-in EtherNet/IP Port

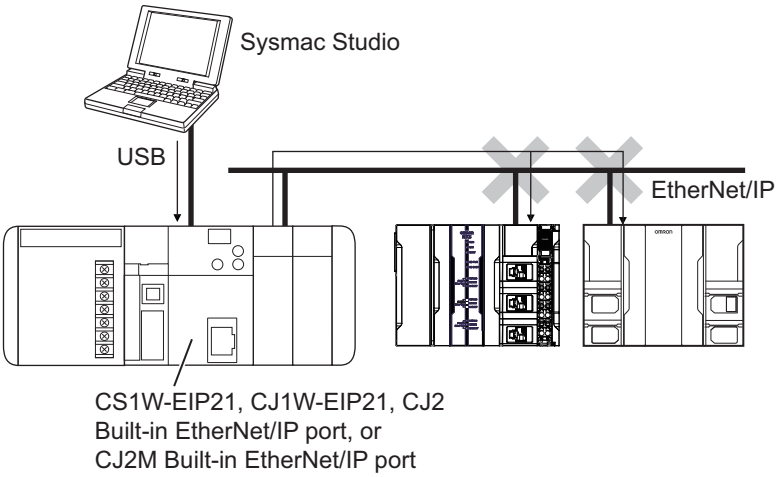

- You cannot route through any networks other than EtherNet/IP networks.

4

Designing the Power Supply System

This section describes how to design the power supply system for the NX-series NX502 CPU Unit.

4-1 Power Supply System 4-2
- 4-1-1 Unit Power Supply and I/O Power Supply 4-2
- 4-1-2 NX-series Power Supply-related Units 4-4
- 4-1-3 X Bus Unit Power Supply 4-9

4-2 Designing the NX Unit Power Supply System 4-11
- 4-2-1 Procedure for Designing the NX Unit Power Supply System 4-11
- 4-2-2 Calculation Example for the NX Unit Power Supply 4-12

4-3 Designing the I/O Power Supply System 4-14
- 4-3-1 I/O Power Supply Method 4-14
- 4-3-2 Designing the I/O Power Supply from the NX Bus 4-15
- 4-3-3 Designing the I/O Power Supply from External Sources 4-20
- 4-3-4 Restrictions on Inrush Current for ON/OFF Operation 4-20

4-4 Selecting External Power Supplies and Protective Devices 4-22
- 4-4-1 Selecting the Unit Power Supply 4-22
- 4-4-2 Selecting the I/O Power Supplies 4-24
- 4-4-3 Selecting Protective Devices 4-25

4-1 Power Supply System

The power supply system for the CPU Rack of the NX-series NX502 CPU Unit consists of two power supply lines: one for Unit power and other for I/O power. Therefore, you need to prepare two separate external power supplies for them.
Unit power is supplied from the power supply terminals of the CPU Unit to the CPU Unit, NX Units, and X Bus Units.

You may need additional power supply Units for NX Unit power for the NX Unit connected to the right side of the CPU Unit or I/O power according to the total power consumption or the total current consumption of NX Units on the CPU Rack.
Design the power supply system for the CPU Rack of the NX-series NX502 CPU Unit as below.

- Calculate the NX Unit power consumption to determine NX Unit power supply specifications, including whether to add additional power supply Units or not.
- Calculate the I/O power current consumption and voltage drop to determine I/O power supply specifications, including whether to add additional power supply Units or not.

The X Bus Unit power supply for the X Bus Unit connected to the left side of the CPU Unit is supplied directly from the Unit power supplied to the CPU Unit. Therefore, external power supply is not required.

4-1-1 Unit Power Supply and I/O Power Supply

This section provides details on Unit power supply and I/O power supply.

Unit Power Supply

Unit power is supplied from the power supply terminals of the CPU Unit to the CPU Unit, NX Units, and X Bus Units.
NX Unit power is supplied to the internal circuits of each NX Unit on the CPU Rack of the NX502 CPU Unit.
The NX Unit power is supplied via the internal power supply circuit from the Unit power supply terminals of the CPU Unit or those of an Additional NX Unit Power Supply Unit.
Up to 10 W of NX Unit power can be delivered to NX Units via the NX bus connectors.
Up to 50 W of X Bus Unit power can be delivered directly from the Unit power supplied to the CPU Unit.

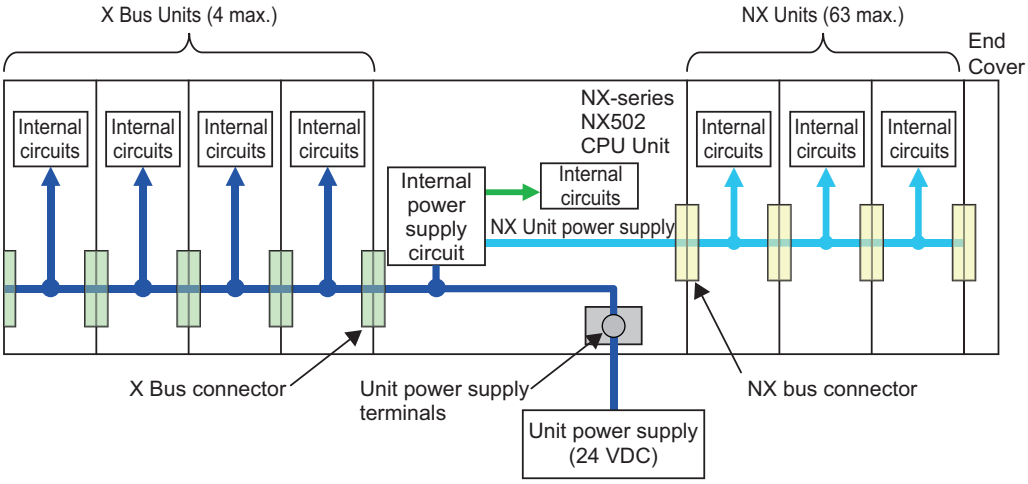

I/O Power Supply

I/O power is supplied to the I/O circuits of each NX Unit on the CPU Rack of the NX502 CPU Unit, as well as to external devices connected to the NX Units.

Some NX Units receive I/O power through the NX bus, and others receive from external devices. If any NX Unit on the CPU Rack receives I/O power through the NX bus, you need to prepare an external I/O power supply device. For details on how to supply I/O power to NX Units, refer to the datasheet included in the user's manuals for the NX Units.
To connect an external I/O power supply, you need an Additional I/O Power Supply Unit. Connect its power supply terminals to the I/O power supply.
The I/O power supply can provide up to 10 A for NX Units via the NX bus connectors.

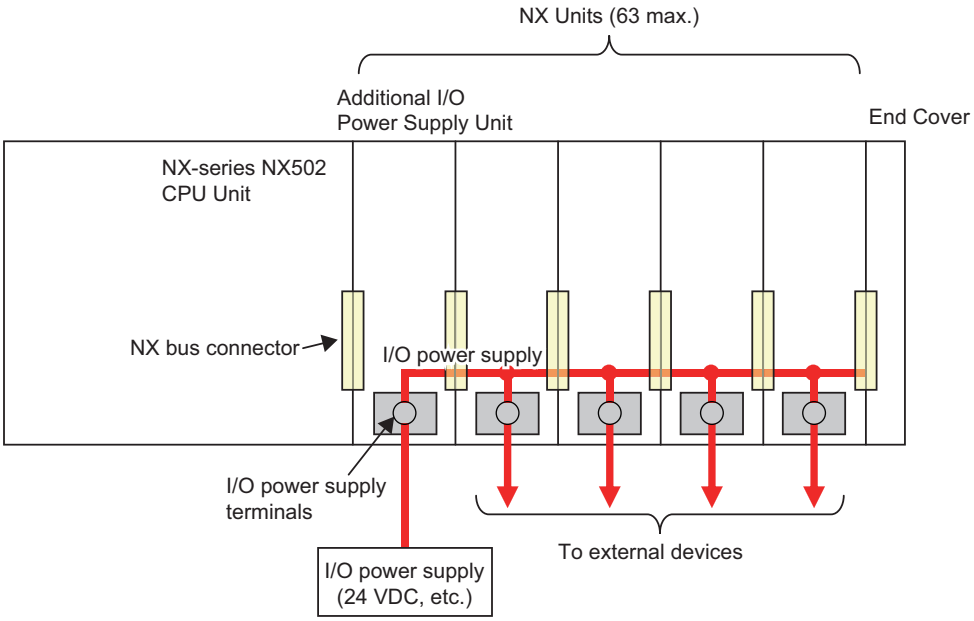

Precautions for Correct Use

Make sure to prepare separate power supply devices for NX Unit power and I/O power. Using the same power supply for them may generate noise and result in malfunction.

4-1-2 NX-series Power Supply-related Units

There are three types of NX-series power supply-related Units: Additional NX Unit Power Supply Unit, Additional I/O Power Supply Unit, and I/O Power Supply Connection Unit. The following table explains each Unit.

Unit name	Description
Additional NX Unit Power Supply Unit	Supply additional NX Unit power via this Unit if the total power consumption of the internal circuits of the NX Units on the CPU Rack exceeds the NX Unit power supply capacity of the CPU Unit.
Additional I/O Power Supply Unit	• Connect an external I/O power supply to this Unit to deliver the I/O power to NX Units on the CPU Rack through the NX bus, if necessary. • Supply additional I/O power via this Unit if over 10 A is consumed in total by the I/O circuits of the NX Units on the CPU Rack and external devices connected to the NX Units. • Supply additional I/O power via this Unit if the I/O power voltage goes below the voltage levels specified for the I/O circuits of the NX Units on the CPU Rack or those specified for the connected external devices. • Insert this Unit to separate the I/O power supply line if any NX Unit on the CPU Rack is connected to an external device with a different I/O power supply voltage. • Insert this Unit to separate the I/O power supply line to prevent noise and other factors from affecting the other NX Units.
I/O Power Supply Connection Unit	Add this Unit to provide additional I/O power supply terminals if required to connect external devices to a Digital I/O Unit or Analog I/O Unit.

For the specifications of NX-series power supply-related Units, refer to the *NX-series System Units User's Manual (Cat. No. W523)*. For information on the latest lineup of the NX-series power supply-related Units, refer to the relevant catalogs or OMRON websites, or ask your OMRON representative.

Additional NX Unit Power Supply Unit

You can use Additional NX Unit Power Supply Units to deliver additional supply of NX Unit power when the total power consumption of the internal circuits of NX Units on the CPU Rack exceeds the NX Unit power supply capacity of the CPU Unit.
The following figure shows how to use an Additional NX Unit Power Supply Unit. Assume that three NX Units, No.1 to No.3, are connected to the CPU Rack, as shown below. Also assume that only NX Unit No.1 is supplied with adequate NX Unit power because the total power consumption of the internal circuits of the three NX Units exceeds the NX Unit power supply capacity of the CPU Unit. In this case, insert an Additional NX Unit Power Supply Unit between NX Units No.1 and No.2. Connect its Unit power supply terminals to the Unit power supply. The NX Unit power is supplied to NX Units No.2 and No.3 via the inserted Additional NX Unit Power Supply Unit, instead of the CPU Unit.
More than one Additional NX Unit Power Supply Unit can be connected to the CPU Rack. If adequate NX Unit power is not provided for all the NX Units on the right side of the Additional NX Unit Power Supply Unit, add another Additional NX Unit Power Supply Unit to an appropriate place.
Basically, the NX Unit power supply line connects adjacent NX Units through the NX bus. However, the NX Unit power supply line is separated by an inserted Additional NX Unit Power Supply Unit. In the figure below, the NX Unit power supply line is separated between NX Unit No.1 and the Additional NX Unit Power Supply Unit. However, the I/O power supply line is not separated by the Additional NX Unit Power Supply Unit. Therefore, the I/O power supply line is connected through all the NX Units, No.1 to No.3.

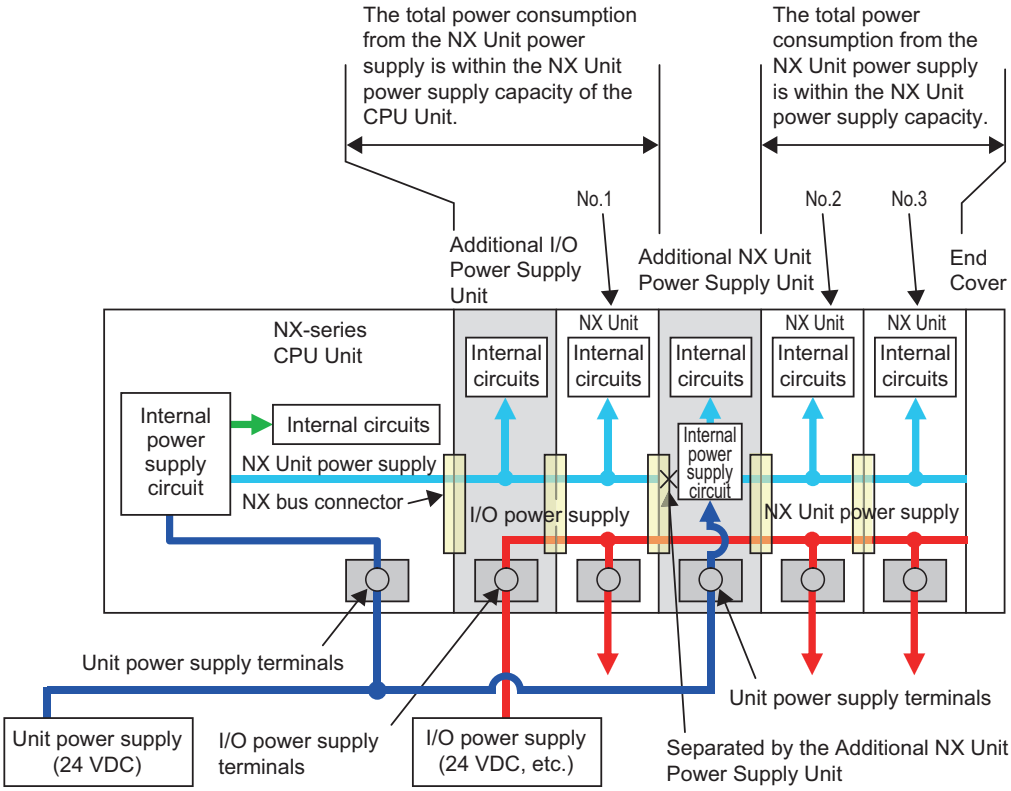

Additional I/O Power Supply Unit

The following explains how to use Additional I/O Power Supply Units.

- Connect an external I/O power supply to this Unit to deliver the I/O power to NX Units through the NX bus, if necessary.
- Supply additional I/O power via this Unit if over 10 A is consumed in total by the I/O circuits of the NX Units on the CPU Rack and external devices connected to the NX Units.
- Supply additional I/O power via this Unit if the I/O power voltage goes below the voltage levels specified for the I/O circuits of the NX Units on the CPU Rack or those specified for the connected external devices.
- Insert this Unit to separate the I/O power supply line if any NX Unit on the CPU Rack is connected to an external device with a different I/O power supply voltage.
- Insert this Unit to separate the I/O power supply line to prevent noise and other factors from affecting the other NX Units.

● I/O Power Supply for NX Units through the NX Bus

Some NX Units receive I/O power through the NX bus, and others receive from external devices. If any NX Unit on the CPU Rack receives I/O power through the NX bus, you need to prepare an external I/O power supply device. For details on how to supply I/O power to NX Units, refer to the datasheet included in the user's manuals for the NX Units.

Insert an Additional I/O Power Supply Unit on the right side of the CPU Unit, as shown below. Connect its power supply terminals to an external I/O power supply device. It supplies I/O power to all the NX Units through the NX bus.

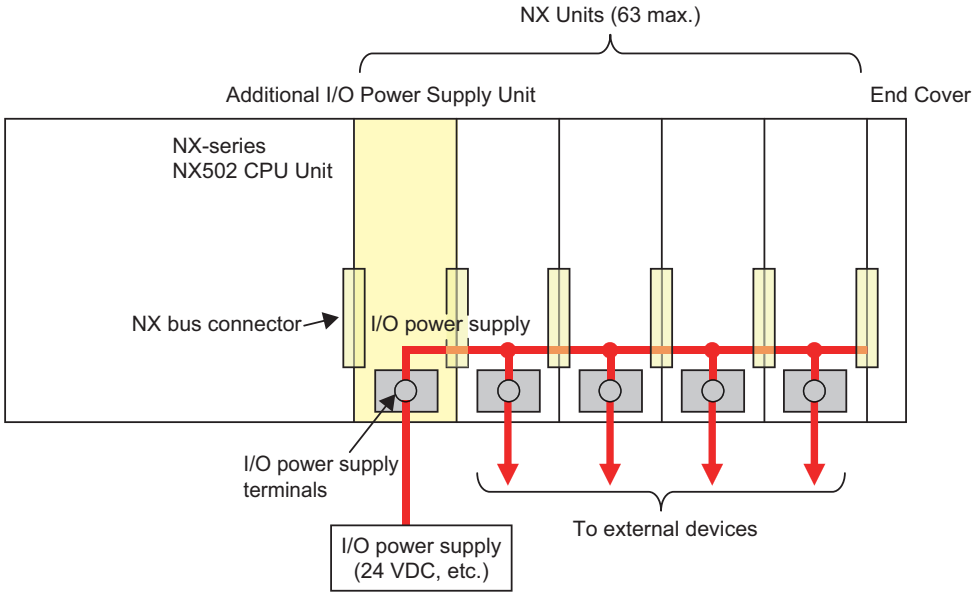

● Additional Supply of I/O Power

In the following cases, you need another Additional I/O Power Supply Unit in addition to the one inserted on the right side of the CPU Unit.

- Over 10 A is consumed in total by the I/O circuits of the NX Units on the CPU Rack and external devices connected to the NX Units.
- The I/O power voltage goes below the voltage levels specified for the I/O circuits of the NX Units on the CPU Rack or those specified for the connected external devices.

Assume that three NX Units, No.1 to No.3, are connected to the CPU Rack, as shown below. Also assume that only NX Unit No.1 is supplied with adequate current and voltage because one existing Additional I/O Power Supply Unit and one external I/O power supply device cannot cover the total current consumption of the I/O circuits of the three NX Units, the total current consumption of the connected external devices, or I/O power voltage. In this case, insert another Additional I/O Power Supply Unit between NX Units No.1 and No.2. Connect its I/O power supply terminals to an I/O power supply device which is prepared separately from the one connected to the existing Additional I/O Power Supply Unit. The I/O power is supplied to NX Units No.2 and No.3 via the inserted Additional I/O Power Supply Unit.

More than one Additional I/O Power Supply Unit can be connected to the CPU Rack. If adequate I/O power is not provided for all the NX Units on the right side of the Additional I/O Power Supply Unit, add another Additional I/O Power Supply Unit to an appropriate place.

Basically, the I/O power supply line connects adjacent NX Units through the NX bus. However, the I/O power supply line is separated by an inserted Additional I/O Power Supply Unit. In the figure below, the I/O power supply line is separated between NX Unit No.1 and the Additional I/O Power Supply Unit. However, the NX Unit power supply line is not separated by the Additional I/O Power Supply Unit. Therefore, the NX unit power supply line is connected through all the NX Units, No.1 to No.3, as shown below.

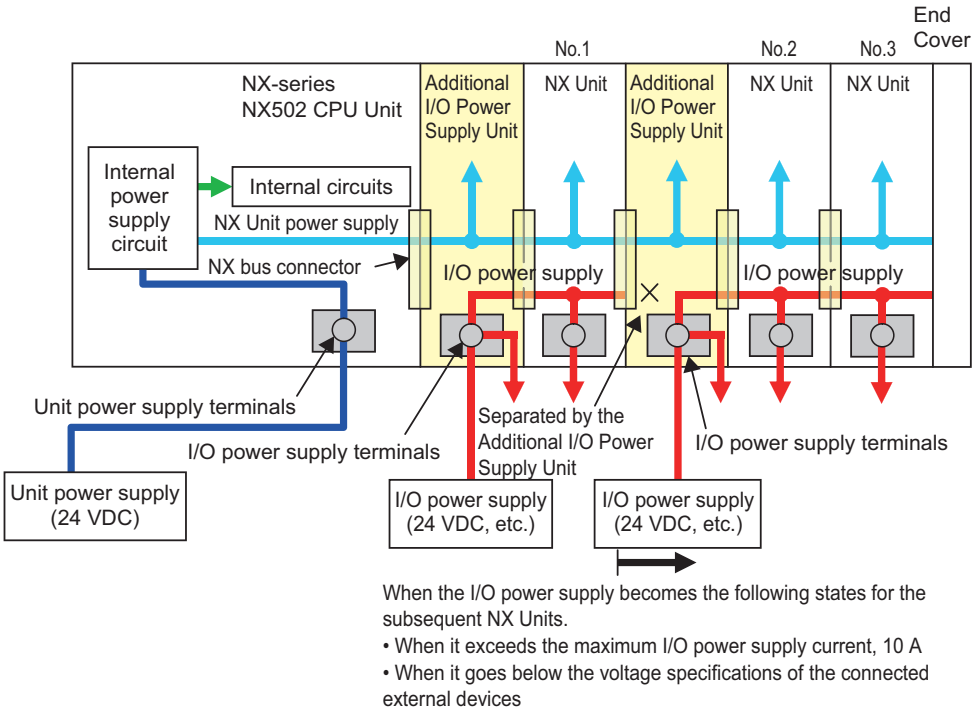

● Separating the I/O Power Supply Line

Insert an Additional I/O Power Supply Unit to separate the I/O power supply line when you connect an NX Unit on the CPU Rack to an external device with a different I/O power voltage, or when you prevent noise or other factors from affecting other NX Units.

Assume that the CPU Rack contains one NX Unit with I/O power voltage of 24 VDC and two NX Units with 12 VDC, as shown in the figure below. In this case, you need two Additional I/O Power Supply Units; one for the NX Unit with 24 VDC, and the other for the two NX Units with 12 VDC. Connect the I/O power supply terminals of each to the corresponding I/O power supply device with 24 VDC or 12 VDC.

Basically, the I/O power supply line connects adjacent NX Units through the NX bus. However, the I/O power supply line is separated by an inserted Additional I/O Power Supply Unit. In the figure below, the I/O power supply line is separated between the NX Units with 24 VDC and the ones with 12 VDC. However, the NX Unit power supply line is connected through all the NX Units.

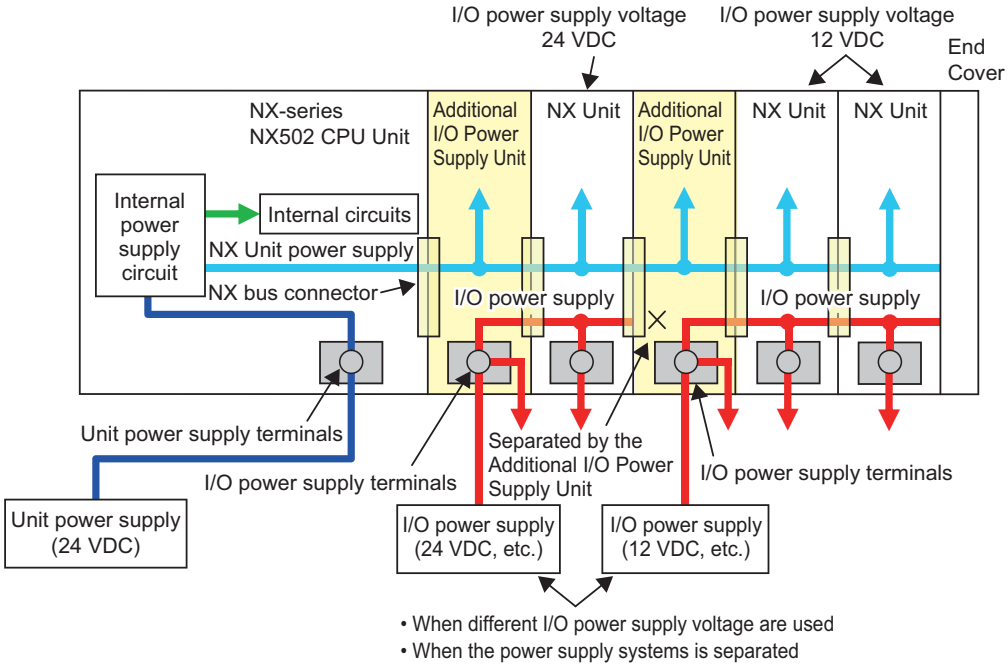

I/O Power Supply Connection Unit

You can add an I/O Power Supply Connection Unit to provide additional I/O power supply terminals if required to connect external devices to a Digital I/O Unit or Analog I/O Unit.
The following figure shows how to use I/O Power Supply Connection Units. Assume that a PNP-type Digital Input Unit, NX-ID5342, is used to input signals from a two-wire sensor and a three-wire sensor with NPN output. The NX-ID5342 Digital Input Unit does not have I/O power terminals. For the Digital Input Unit, you need to prepare IOG terminals for the two-wire sensor, and IOV terminals as well as IOG terminals for the three-wire sensor. Insert two I/O Power Supply Connection Units: one is NX-PC0020 with 16 IOV terminals, and the other is NX-PC0010 with 16 IOG terminals. Wire them as shown in the figure below.
The NX Unit power supply line as well as the I/O power supply line is connected between the I/O Power Supply Connection Units and adjacent NX Units through the NX bus.

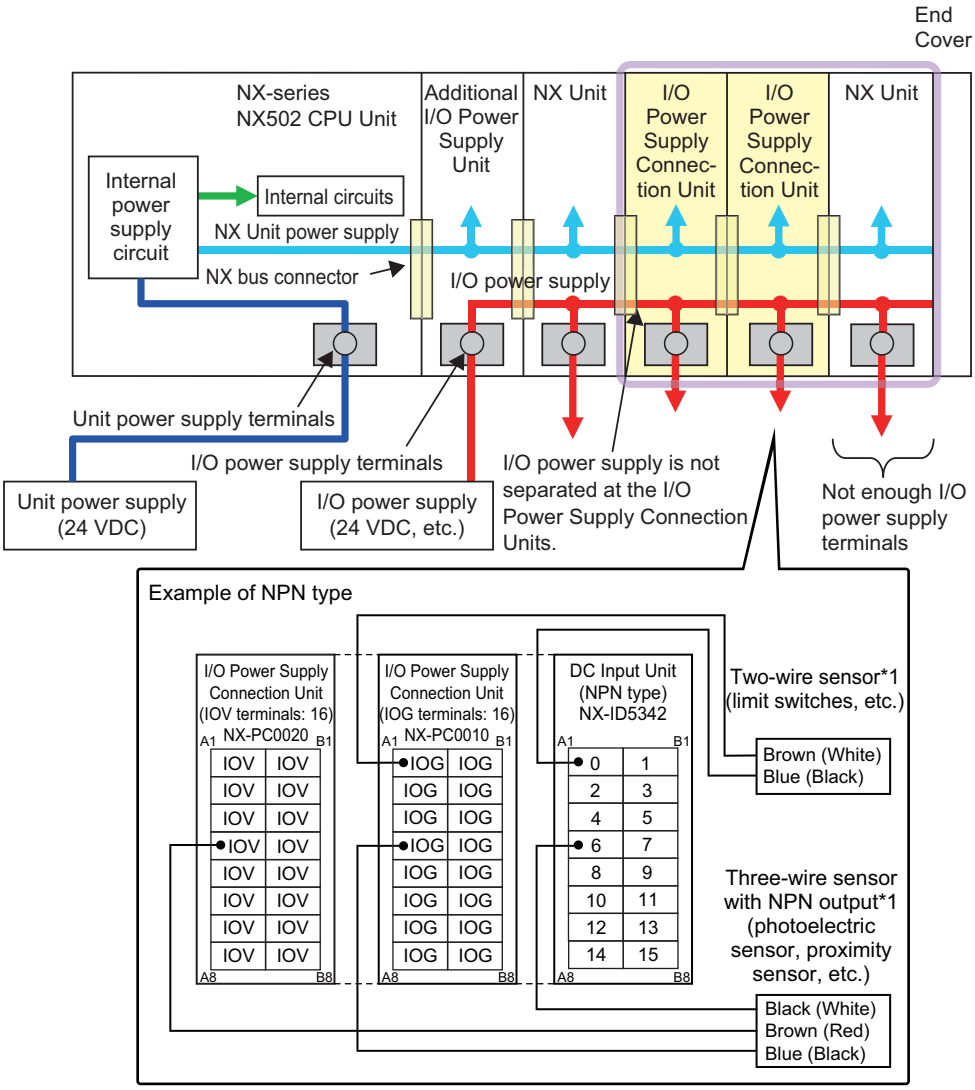

*1. Wire colors have been changed according to revisions in the JIS standards for photoelectric and proximity sensors. The colors in parentheses are the wire colors prior to the revisions.

4-1-3 X Bus Unit Power Supply

The X Bus Unit power is supplied directly from the Unit power supplied to the CPU Unit. Therefore, external power supply is not required.

A total of 50 W of DC power can be supplied.

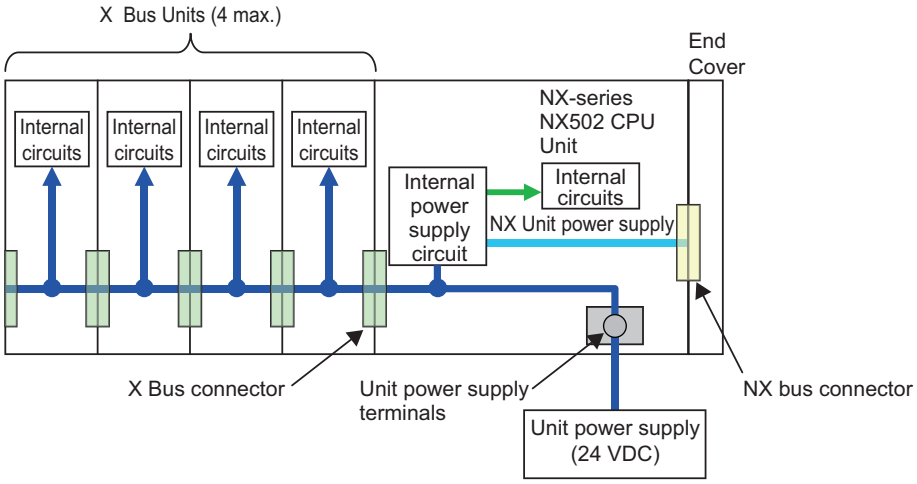
X Bus Units (4 max.)
End Cover
Internal circuits
Internal circuits
Internal circuits
Internal circuits
NX-series NX502 CPU Unit
Internal power supply circuit
Internal circuits
NX Unit power supply
X Bus connector
Unit power supply terminals
NX bus connector
Unit power supply (24 VDC)

4-2 Designing the NX Unit Power Supply System

This section describes how to design the NX Unit power supply to the CPU Rack of the NX-series NX502 CPU Unit.

4-2-1 Procedure for Designing the NX Unit Power Supply System

The total power consumption from the NX Unit power supply must not exceed the NX Unit power supply capacity of the Unit that supplies the NX Unit power.
Use the following procedure to design the NX Unit power supply.

1 Calculate the total power consumption from the NX Unit power supply that is required by the NX Units that are connected to the CPU Unit.

2 If the total power consumption from the NX Unit power supply exceeds the NX Unit power supply capacity of the CPU Unit, add an Additional NX Unit Power Supply Unit to the right of an NX Unit before the capacity is exceeded.

3 Calculate the total power consumption from the NX Unit power supply that is required by the NX Units that are connected after the Additional NX Unit Power Supply Unit. If the total power consumption of those NX Units exceeds the NX Unit power supply capacity of the Additional NX Unit Power Supply Unit, add another Additional NX Unit Power Supply Unit to the right of an NX Unit before the capacity is exceeded.

4 Repeat step 3 until the design conditions for the NX Unit power supply are met.

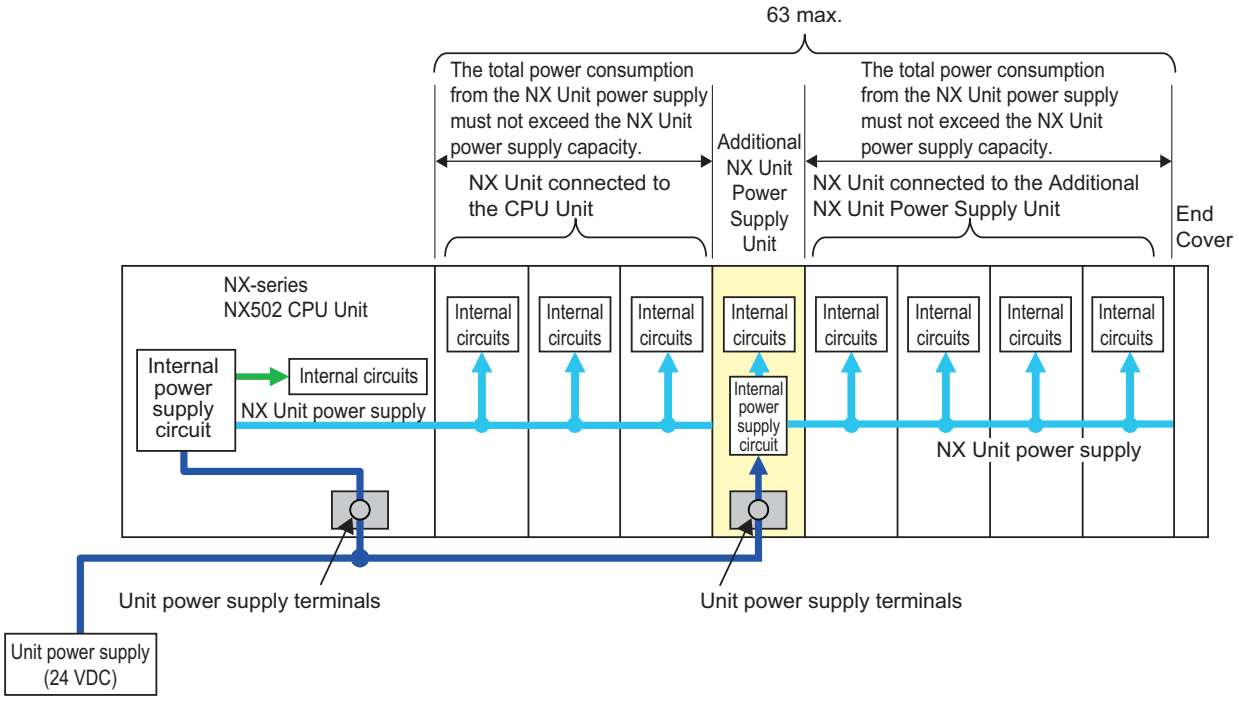

● NX Unit Power Supply Capacity and Restrictions

The internal power supply circuits of the CPU Unit or Additional NX Unit Power Supply Unit supply the NX Unit power to the NX Units.

The NX Unit power supply capacity does not include the NX Unit power consumption of the Additional NX Unit Power Supply Units.

The power supply capacity of the CPU Unit is 10 W.

For restrictions on the Additional NX Unit Power Supply Unit, refer to the *NX-series System Units User's Manual* (Cat. No. W523).

Precautions for Correct Use

- Do not exceed the NX Unit power supply capacity. If you exceed the NX Unit power supply capacity, malfunction may occur.
- Use the same Unit power supply to supply the Unit power to the entire CPU Rack. If you supply power from different Unit power supplies, differences in electrical potential may cause unexpected currents in the NX Unit power supply, which may result in failure or malfunction.

4-2-2 Calculation Example for the NX Unit Power Supply

This section provides a calculation example for the NX Unit power supply.

● Unit Configuration Example

Name	Model	Quantity	Power consumption/Unit*1
CPU Unit	NX502-1500	1	18.3 W
EtherNet/IP Unit	NX-EIP201	1	8.1 W
Additional I/O Power Supply Unit	NX-PF0630	1	0.85 W
Digital Input Unit	NX-ID3317	4	0.90 W
Relay Output Unit	NX-OC2633	3	1.20 W

*1. For the power consumption of NX Units and X Bus Units connected to CPU Unit, refer to the user's manuals for the respective NX Units and X Bus Units.

● Calculating the Total Power Consumption from the NX Unit Power Supply

Calculate the total power consumption from the NX Unit power supply that is required by the NX Units that are connected to the CPU Unit.

Total power consumption from NX Unit power supply [W] = 0.85 W × 1 + 0.90 W × 4 + 1.20 W × 3 = 8.05 W

● Confirming the NX Unit Power Supply Capacity of the CPU Unit

The NX Unit power supply capacity is 10 W max.

Therefore, in this example, the total power consumption from the NX Unit power supply is 8.05 W, and the NX Unit power supply capacity is 10 W max., so the design conditions are met.

Additional Information

Excess or insufficiency in the NX Unit power supply capacity can be easily checked when the Unit configuration is created on the CPU and Expansion Racks Tab Page on the Sysmac Studio.
Use the following procedure to check the power supply capacity.

On the CPU and Expansion Racks Tab Page on the Sysmac Studio, select the Unit to supply NX Unit power. The power that is supplied by the NX Unit power supply (i.e., the total power consumption) and the power supply capacity are displayed for the **Supply Power/Available Power** parameter.
The following example is for when selecting the NX502 CPU Unit.

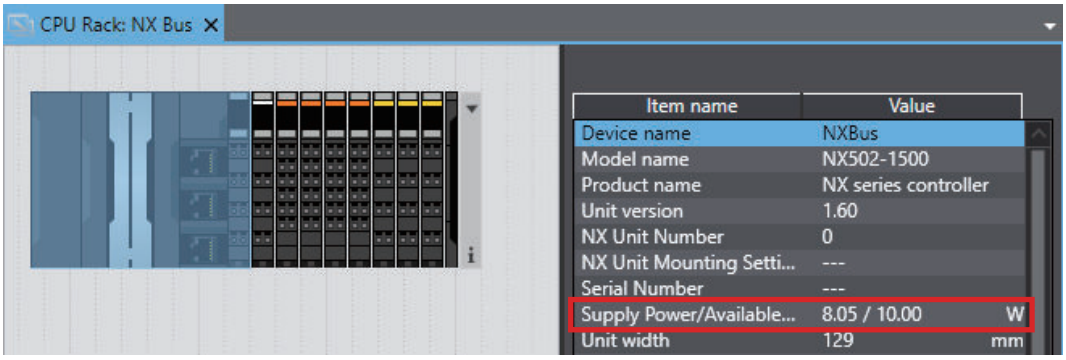

If the power to supply exceeds the NX Unit power supply capacity of the Unit that is selected to supply the NX Unit power, a yellow warning icon is displayed by the first NX Unit for which there is not sufficient capacity and also by all the remaining NX Units.

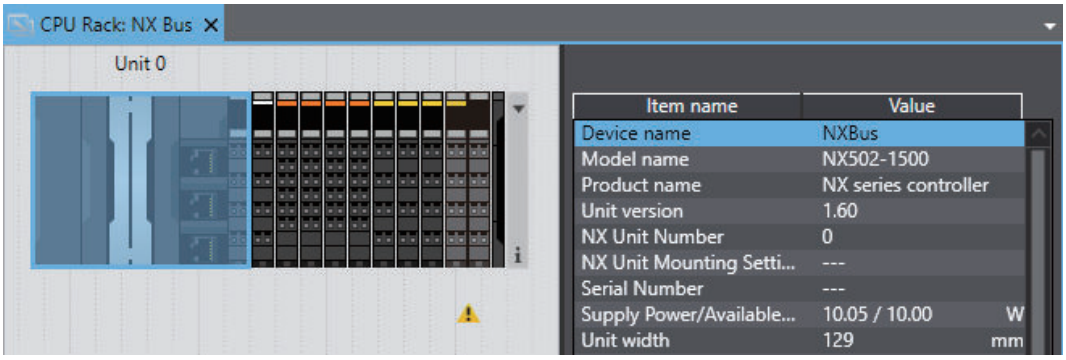

The Sysmac Studio does not consider the I/O power supply design conditions. When actually designing the power supply, refer to *4-3-2 Designing the I/O Power Supply from the NX Bus* on page 4-15.

4-3 Designing the I/O Power Supply System

This section describes how to design the I/O power supply to the NX Units connected to the NX-series NX502 CPU Unit.

4-3-1 I/O Power Supply Method

There are the following three methods to supply the I/O power supply to the NX Units depending on the type and model of the NX Units.

Supply method	Description
Supply from the NX bus	Power is supplied through the NX bus connectors by connecting an I/O power supply to the I/O power supply terminals on the Additional I/O Power Supply Units.
Supply from external source	Power is supplied to the Units from an external source. I/O power is supplied by connecting an I/O power supply to the terminal blocks on the Units.
No supply	The I/O power supply is not needed when the NX Unit does not use it for the connected external devices, or when power for the interface is generated inside the NX Unit.

Refer to the user's manuals for individual NX Units or to the *NX-series Data Reference Manual (Cat. No. W525)* for the power supply method for specific NX Units.

An example is shown below.

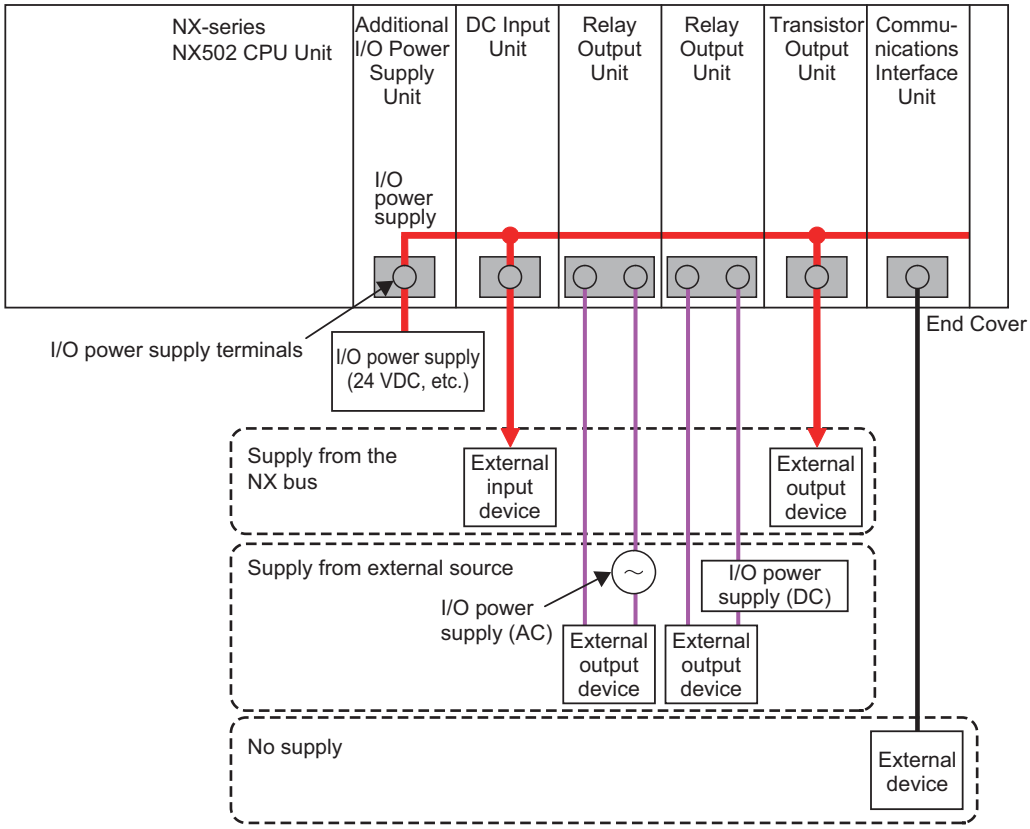

4-3-2 Designing the I/O Power Supply from the NX Bus

Procedure for Designing the I/O Power Supply

The procedure is explained under the precondition that an Additional I/O Power Supply Unit is connected to the right side of the CPU Unit because an NX Unit that requires the power supply from NX bus is mounted on the CPU Rack.

Make sure that the following design conditions are met when you design the I/O power supply from the NX bus.

- The total current consumption from the I/O power supply must not exceed the maximum I/O power supply current of the Unit that supplies the I/O power.
- The voltage drop in the I/O power supply must be within the voltage specifications of the I/O circuits of the NX Units and the connected external devices.

Use the following procedure to design the I/O power supply.

1 Calculate the total current consumption from the I/O power supply of the NX Units that are connected to the CPU Unit and the CPU Unit, and calculate the voltage drop in the I/O power supply.

2 Add an Additional I/O Power Supply Unit in either of the following cases, a) or b). Add the Additional I/O Power Supply Unit to the right of the NX Unit for which both a) and b) do not apply.

a) The total current consumption for the I/O power supply exceeds the I/O power supply capacity of the Additional I/O Power Supply Unit.

b) Voltage drop in the I/O power supply causes the voltage of the I/O power supply to go below the voltage specifications of the I/O circuits of the NX Units or the connected external devices.

3 Calculate the voltage drop in the I/O power supply after the Additional I/O Power Supply Unit and the total current consumption from the I/O power supply that is required by the Additional I/O Power Supply Unit and by the NX Units that are connected after the Additional I/O Power Supply Unit. Add another Additional I/O Power Supply Unit in either of the following cases, a) or b). Add the Additional I/O Power Supply Unit to the right of the NX Unit for which both a) and b) do not apply.

a) The total current consumption for the I/O power supply exceeds the I/O power supply capacity of the Additional I/O Power Supply Unit.

b) Voltage drop in the I/O power supply causes the voltage of the I/O power supply to go below the voltage specifications of the I/O circuits of the NX Units or the connected external devices.

4 Repeat step 3 until the design conditions for the I/O power supply are met.

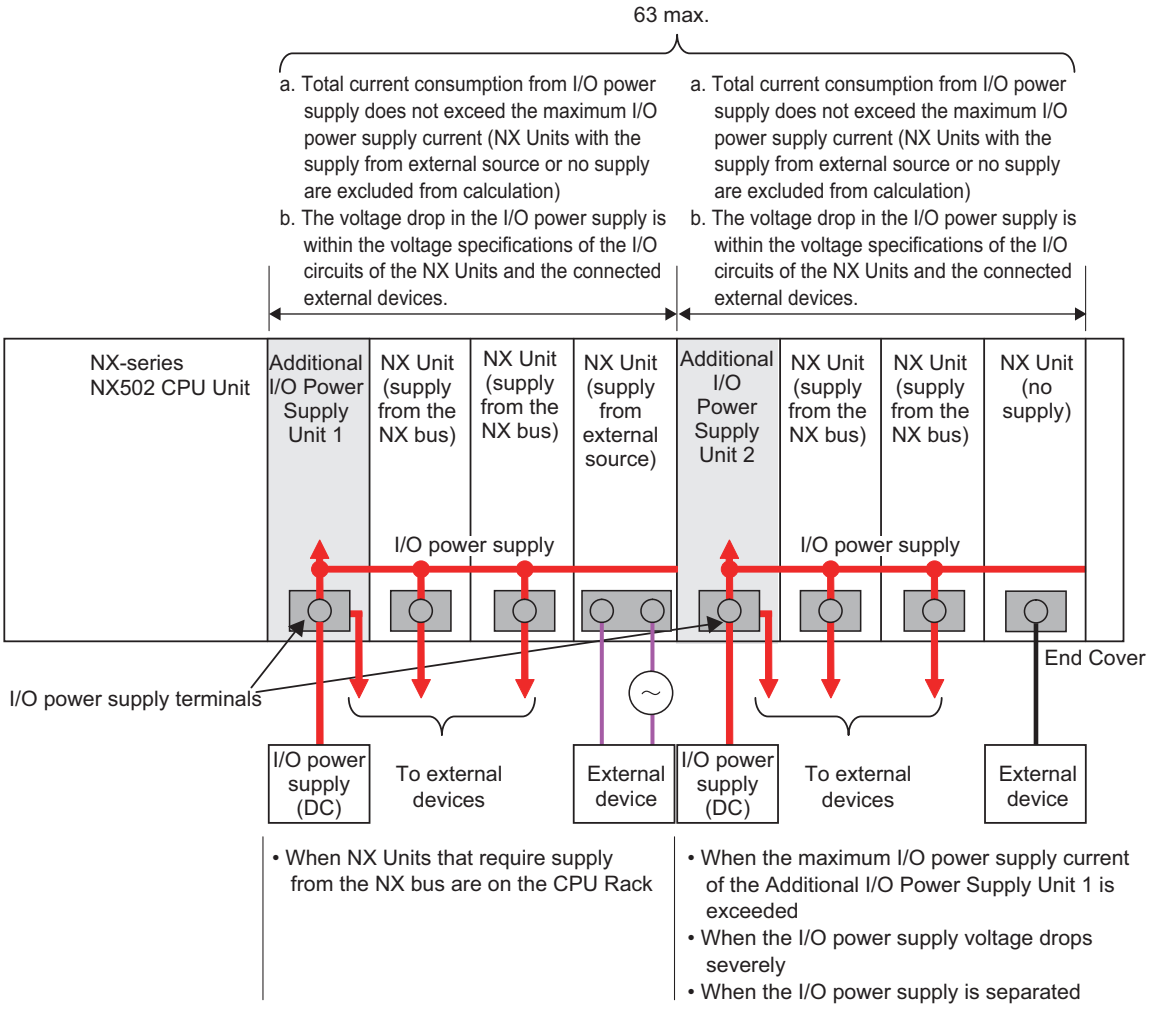

● Maximum I/O Power Supply Current

The maximum I/O power supply current is the maximum current that the I/O power supply that is connected to the Additional I/O Power Supply Unit can supply through the NX bus connectors to the NX Units.

For information on the maximum I/O power current supplied from the Additional I/O Power Supply Unit, refer to the *NX-series System Units User's Manual (Cat. No. W523)*.

Calculating the Total Current Consumption from the I/O Power Supply

The total current consumption from the I/O power supply from the NX bus is the total of the following current consumptions.

- The current consumption from the I/O power supply that is required for the Additional I/O Power Supply Unit and for the NX Units that are connected to the Additional I/O Power Supply Unit
- The current consumption between the NX Units and the connected external devices

Current consumption item	Description
Current consumption from I/O power supply	This is the current that is consumed by the internal circuits that operate on the I/O power supply. Specific values are given in the user's manuals for individual Units.

Current consumption item	Description
Current consumption between the NX Units and the connected external devices	This is the current that is consumed between the NX Units and the connected external devices. For example, this is the current consumed by a Digital Input Unit to supply power to photoelectric sensors or to turn ON the input circuits in the Digital Input Unit. The current consumption depends on the type of I/O circuit in the NX Unit, the number of I/O points that are used, and the current consumption of the connected external device. It must be calculated for each NX Unit.

● Calculation Example of I/O Power Supply Capacity

An example of calculating the required power supply capacity of the I/O power supply is given below.

Configuration and Conditions

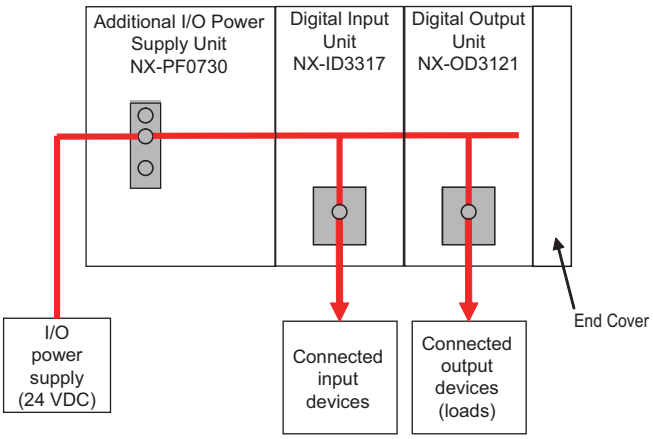

Item		Condition
I/O power supply voltage		24 VDC
Inputs	Number of inputs used (that turn ON simultaneously)	4 points
	Current consumption of connected input devices	50 mA/point
Outputs	Number of outputs (that turn ON simultaneously)	4 points
	Load current of connected loads	125 mA/point
	Current consumption of connected output devices	50 mA/point

I/O power is supplied to the NX-ID3317 and NX-OD3121 from the NX bus.

a. Unit Specifications

Model	Current consumption from I/O power supply	Input current
NX-PF0730	10 mA	---
NX-ID3317	0 mA	6 mA/point
NX-OD3121	10 mA	---

b. Calculations

The current consumption from the I/O power supply for each Unit is calculated as follows.

NX-PF0730 Current Consumption	=	Current consumption from I/O power supply
	=	10 mA

NX-ID3317 Current Consumption	=	Current consumption from I/O power supply + (Input current × Number of inputs used) + Total current consumption of connected input devices
	=	0 mA + (6 mA × 4 points) + (50 mA × 4 points)
	=	224 mA

NX-OD3121 Current Consumption	=	Current consumption from I/O power supply + Total load current of connected loads + Total current consumption of connected output devices
	=	10 mA + (125 mA × 4 points) + (50 mA × 4 points)
	=	710 mA

The required power supply capacity for the I/O power supply is calculated as follows.

Power supply capacity of I/O power supply	=	(Current consumed by NX-PF0730) + (Current consumed by NX-ID3317) + (Current consumed by NX-OD3121)
	=	10 mA + 224 mA +710 mA
	=	944 mA

Calculating the Voltage Drop in the I/O Power Supply

Voltage drop occurs in the CPU Units and NX Units due to the contact resistance at the points where Units are connected to each other. Design the I/O power supply system to maintain the voltage specifications of the NX Unit I/O circuits and connected external devices even if the voltage of the I/O power supply drops.

As shown in the following table, the voltage drop per Unit depends on the total current consumption from the I/O power supply.
In this case, the total current consumption from the I/O power supply must not exceed the maximum I/O power supply current of the Unit that supplies the I/O power.

Total current consumption from the I/O power supply	Voltage drop per Unit
10 A	0.20 V
8 A	0.16 V
6 A	0.12 V
4 A	0.08 V
3 A	0.06 V
2 A	0.04 V
1 A	0.02 V

The following is a calculation example of the I/O power supply range applicable to the additional I/O power supply unit that is located on the right side of CPU Unit based on a unit configuration example shown below. You can also use the same calculation procedure to calculate the I/O power supply range after you add more I/O power supply units in addition to the first one.

Example:

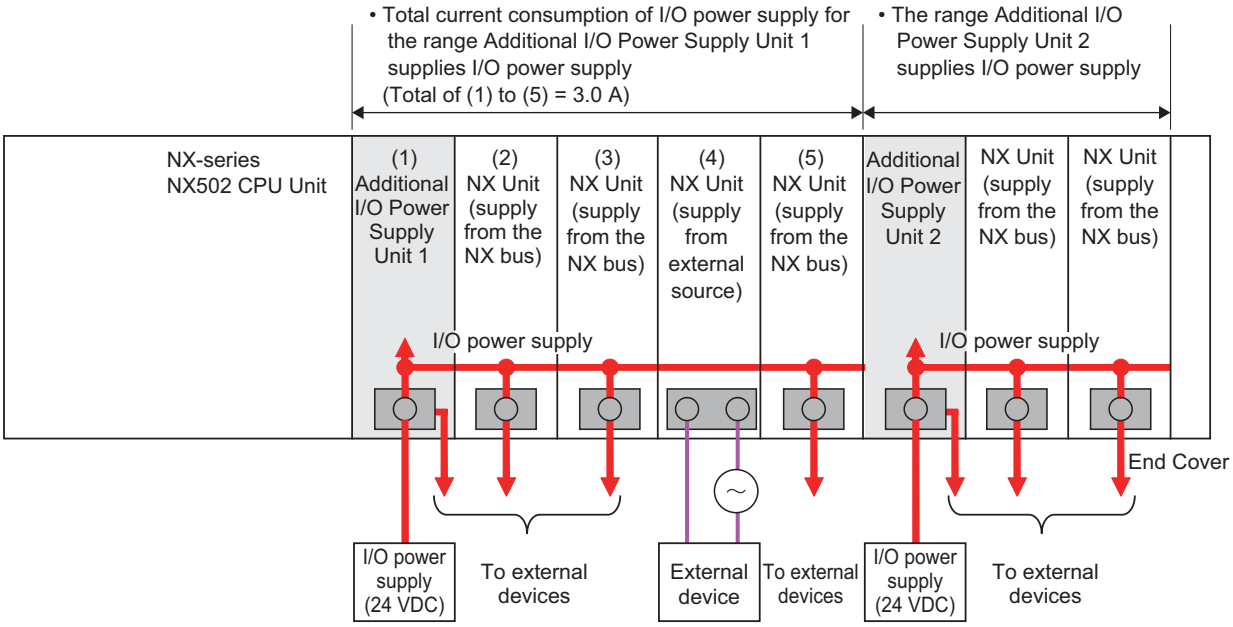

I/O power supply current consumption of each Unit

(1) : 0.0 A*1 (supply from the NX bus)
(2), (3) : 0.5 A each (supply from the NX bus)
(4) : 0.0 A (supply from external source)
(5) : 2.0 A (supply from the NX bus)

*1. The current consumption of the Additional I/O Power Supply Unit is not actually 0 A. However, a value of 0 A is used in this calculation example.
In actual calculations, add the current consumption from the I/O power supply that is given in the *NX-series Data Reference Manual (Cat. No. W525)*.

● Outline

Find the I/O power supply voltage of the NX Unit that is the farthest from the Additional I/O Power Supply Unit 1.
In this example, the I/O power supply voltage of Unit (E) is found.

● Conditions

Assume that an I/O power supply voltage of 24.00 VDC is supplied to the I/O power supply terminals on the Additional I/O Power Supply Unit 1.

● Procedure

1 Use the following formula to calculate the total current consumption from the I/O power supply.

Total current consumption from the I/O power supply	=	(1) + (2) + (3) + (4) + (5)
	=	0.0 A + 0.5 A + 0.5 A + 0.0 A + 2.0 A
	=	3 A

2 Find the I/O power supply voltage and make sure that it is within the voltage specifications of the I/O circuits of the NX Units and the connected external devices.

I/O power supply voltage at (5)	=	I/O power supply voltage on I/O power supply terminals − Voltage drop per Unit × Number of Units passed through
	=	24.00 V − 0.06 V × (5 − 1 Units)
	=	23.76 V

Design to Separate the I/O Power Supply

If the I/O power supply voltages of the connected external devices are different, connect an Additional I/O Power Supply Unit at the point where the I/O power supply voltage changes and then perform similar calculations to design a system that meets the power supply conditions. The same method is used to separate the power supply systems. Connect an Additional I/O Power Supply Unit at the point where the power supply systems to be separated and then perform similar calculations to design the overall system to meet the power supply conditions.

4-3-3 Designing the I/O Power Supply from External Sources

Unlike supplying power from the NX bus, there is no specific design method for supplying I/O power from external sources.
Calculate the total current consumption from the I/O power supply for the NX Units to be supplied power from an external source.
Refer to the user's manuals of the NX Units for the total current consumption from the I/O power supply.

4-3-4 Restrictions on Inrush Current for ON/OFF Operation

This section describes the restrictions on inrush current from the I/O power supply that occurs when connected external devices turn ON and OFF.

Inrush Current Restrictions

If inrush current to the I/O power supply occurs when a connected external device turns ON or OFF, do not allow the effective value of the I/O power supply current to exceed the following rated values when the inrush current is added to the current consumption from the I/O power supply.

- Maximum I/O power supply current
- Current capacity of power supply terminals for the I/O power supply

Also, maintain the peak inrush current 20 A maximum and maintain the pulse width 1 s maximum.
Refer to *4-4-3 Selecting Protective Devices* on page 4-25 for the rated values of the items when the CPU Rack is used.

Calculating the Effective Value of the I/O Power Supply Current

The formula to calculate the effective value of the I/O power supply current, Irms, is given below.

$$Irms=\sqrt{Ip^2 \times D+Ia^2 \times (1-D)}$$
$$(D=\tau/T)$$

- Ip: Peak inrush current (A)
- Irms: Effective value of I/O power supply current (A)

- Ia: Total current consumption from the I/O power supply (A)
- D: Inrush current duty
- τ: Inrush current pulse width (s)
- T: Inrush current period (s)

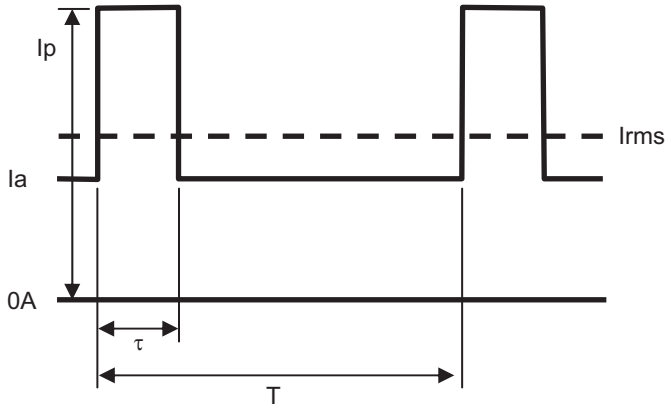

4-4 Selecting External Power Supplies and Protective Devices

This section describes how to select the Unit power supply and the I/O power supply which are the external power supplies for the CPU Rack, and how to select the protective devices.

4-4-1 Selecting the Unit Power Supply

This section describes how to select the Unit power supply for the CPU Rack.

Recommended Power Supplies

Use an SELV power supply that meets the following conditions for the Unit power supply.

- Has overcurrent protection.
- Has double or reinforced insulation between the input and output.
- Has an output voltage of 24 VDC (20.4 to 28.8 VDC).

Recommended Power Supplies: S8VK-S Series (manufactured by OMRON)

Calculating the Required Power Supply Capacity of the Unit Power Supply

● Formula

This section describes how to calculate the required capacity of the Unit power supply for the CPU Rack.

Required capacity of the Unit power supply for the CPU Rack	=	Total of required Unit power supply capacity for each block

Use the following formula to calculate the required Unit power supply capacity for each block in the CPU Rack.

Required Unit power supply capacity of the CPU Unit block = (A) + (B) + (C)/(D)

Required Unit power supply capacity of an Additional NX Unit Power Supply Unit block = ((E) + (F))/(G)

(A)	Unit power consumption of the CPU Unit
(B)	Total Unit power consumption of X Bus Units that are connected to the CPU Unit
(C)	Total NX Unit power consumption of NX Units that are connected to the CPU Unit
(D)	NX Unit power supply efficiency of the CPU Unit
(E)	NX Unit power consumption of the Additional NX Unit Power Supply Unit
(F)	Total NX Unit power consumption of NX Units that are connected to the Additional NX Unit Power Supply Unit
(G)	NX Unit power supply efficiency of the Additional NX Unit Power Supply Unit

Blocks

A block consists of the Unit that supplies the NX Unit power and the range of Units to which that Unit supplies the NX Unit power.

For example, in the configuration in the following figure there are two blocks in the CPU Rack: the block with the CPU Unit which contains the X Bus Unit and the block with the Additional NX Unit Power Supply Unit.

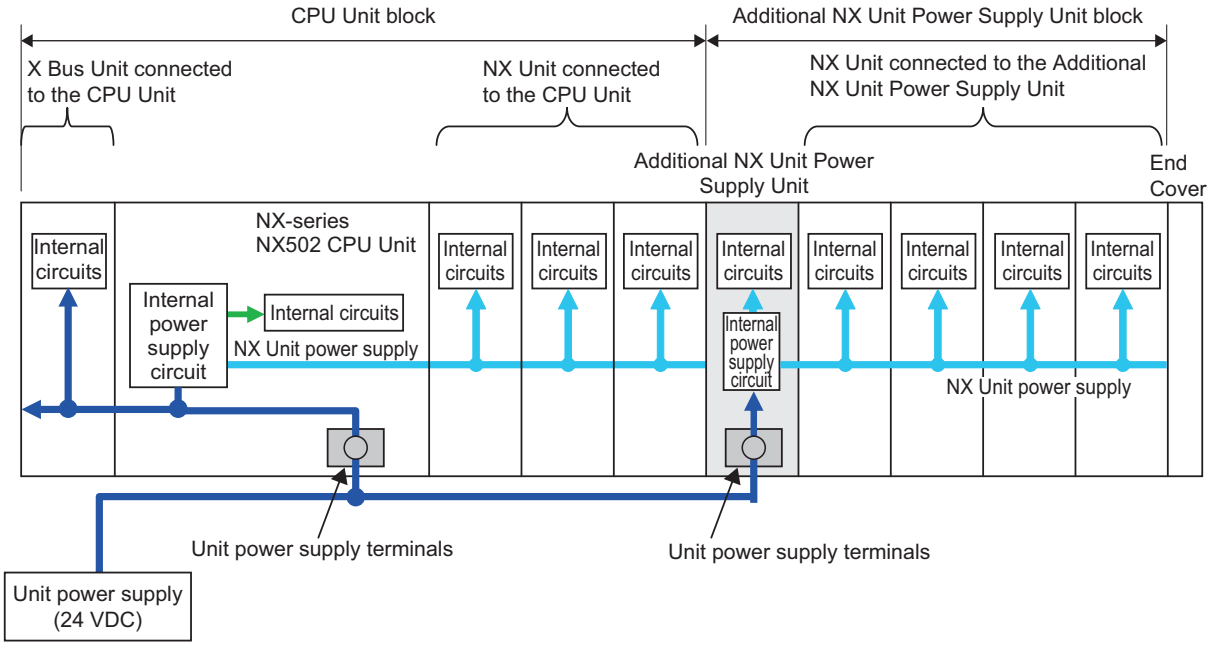

The total of the required Unit power supply capacity for these two blocks is the required power supply capacity of the Unit power supply for the CPU Rack.

Precautions for Correct Use

Use the same Unit power supply to supply the Unit power to one CPU Rack. If you supply power from different Unit power supplies, differences in electrical potential may cause unexpected currents in the NX Unit power supply, which may result in failure or malfunction.

Calculation Example

This section provides a calculation example for the configuration example that is given in *4-2-2 Calculation Example for the NX Unit Power Supply* on page 4-12.

Name	Model	Quantity	Power consumption/Unit
CPU Unit	NX502-1500	1	18.3 W
EtherNet/IP Unit	NX-EIP201	1	8.1 W
Additional I/O Power Supply Unit	NX-PF0630	1	0.85 W
Digital Input Unit	NX-ID3317	4	0.90 W
Relay Output Unit	NX-OC2633	3	1.20 W

- The NX Unit power supply efficiency of the CPU Unit is 80%.

In this configuration example, there is only one block, the CPU Unit block.

Required power supply capacity of Unit power supply to CPU Rack

= Required Unit power supply capacity of CPU Unit block
= (CPU Unit power consumption + Total power consumption from NX Unit power supply of NX Units connected to CPU Unit)/NX Unit power supply efficiency of CPU Unit
= 18.3 W + 8.1 W + (0.85 W × 1 + 0.90 W × 4 + 1.20 W × 3)/0.8
= Approx. 36.5 W

The above is the constant power consumption during operation. When you select the power supply, consider the inrush current that will flow when the power is turned ON.
Refer to *Electrical and Mechanical Specifications* on page 3-2 for information on inrush current specifications.

Precautions for Safe Use

Select an external power supply with sufficient capacity by considering the power supply capacity or inrush current when the power is turned ON that is specified in this manual. Otherwise, the external power supply may not be turned ON or malfunction due to unstable power supply voltage.

4-4-2 Selecting the I/O Power Supplies

This section describes how to select the I/O power supplies for the CPU Rack.

Recommended Power Supplies

Use an SELV power supply that meets the following conditions for the I/O power supply.

- Has overcurrent protection.
- Has double or reinforced insulation between the input and output.
- Has an output voltage of 5 to 24 VDC (4.5 to 28.8 VDC).*1

*1. Use an output voltage that is appropriate for the I/O circuits of the NX Units and the connected external devices.

Recommended Power Supplies: S8VK-S Series (manufactured by OMRON)

Calculating the Required Power Supply Capacity of the I/O Power Supply for NX Units

Use the calculation method that is described in *4-3-2 Designing the I/O Power Supply from the NX Bus* on page 4-15 and calculate the total current consumption from the I/O power supply and the required power supply capacity of the I/O power supply.
Unlike the Unit power supply, it is not necessary to use only one I/O power supply to supply power to all NX Units on the CPU Rack.

Precautions for Safe Use

Select an external power supply with sufficient capacity by considering the power supply capacity or inrush current when the power is turned ON that is specified in this manual. Otherwise, the external power supply may not be turned ON or malfunction due to unstable power supply voltage.

4-4-3 Selecting Protective Devices

This section describes how to select protective devices (e.g., breakers and fuses) to protect against short circuits and overcurrents in external circuits.
Overcurrent is the current that flows when an excessive load is connected and one of the following ratings is exceeded.

Unit	Item for rating	Rated value
CPU Unit	NX Unit power supply capacity	10 W max.
	Current capacity of power supply terminal	4 A max.
Additional NX Unit Power Supply Unit	NX Unit power supply capacity	Refer to the *NX-series System Units User's Manual (Cat. No. W523)*.
	Current capacity of power supply terminal	
Additional I/O Power Supply Unit	Maximum I/O power supply current	
	Current capacity of I/O power supply terminals	

Selecting Protective Devices

Consider the following items when you select protective devices.

- Protective device specifications (breaking/fusing, detection characteristics, steady current value, etc.)
- Inrush current when power is turned ON
- Inrush current when connected external devices turn ON and OFF*1

*1. Refer to *4-3-4 Restrictions on Inrush Current for ON/OFF Operation* on page 4-20 for information on the inrush current when connected external devices are turned ON and OFF.

For the breaking/fusing time, use protective devices that meet the conditions in the following table.

● For Unit Power Supply

Current	Breaking/fusing time
6 A	1 min max.
12 A	15 s max.
21 A	5 s max.
30 A	2.5 s max.

● For I/O Power Supply

The following values apply when the current capacity of power supply terminal is 10 A.

Current	Breaking/fusing time
14 A	1 min max.
28 A	9 s max.
56 A	1.5 s max.
70 A	0.8 s max.

The following values apply when the current capacity of power supply terminal is 4 A.

Current	Breaking/fusing time
6 A	1 min max.
12 A	15 s max.
21 A	5 s max.
30 A	2.5 s max.

Installation Locations for Protective Devices

Install protective devices for the Unit power supply and I/O power supply in the locations that are shown in the following figure.

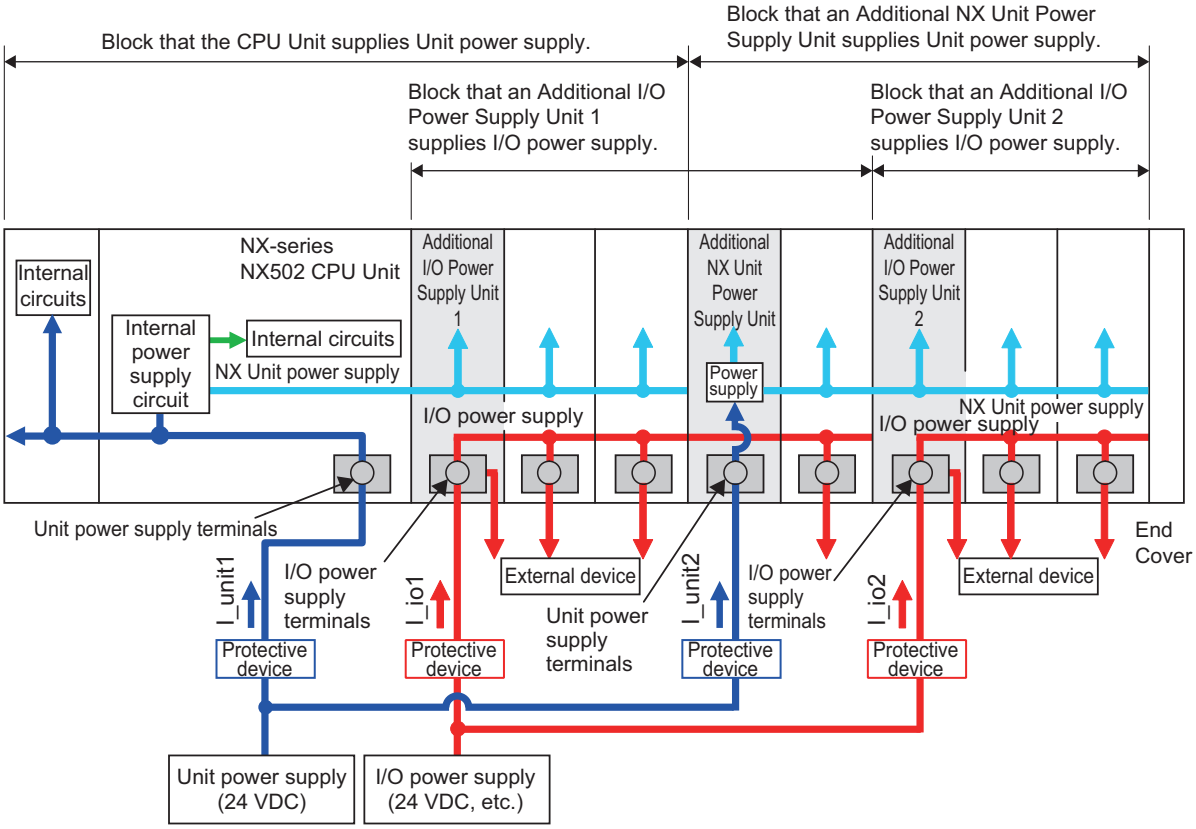

However, fewer protective devices may be required when the current consumption of each block does not exceed the rated current.
An example of this is provided below.

- Using Unwired Unit Power Supply Terminals
  In this example, the current consumption from each power supply is as follows:
  Current consumption from Unit power supply: I_unit1 + I_unit2 ≤ Lowest rated current
  Current consumption from I/O power supply for NX Units: I_io1 + I_io2 ≥ Lowest rated current*1

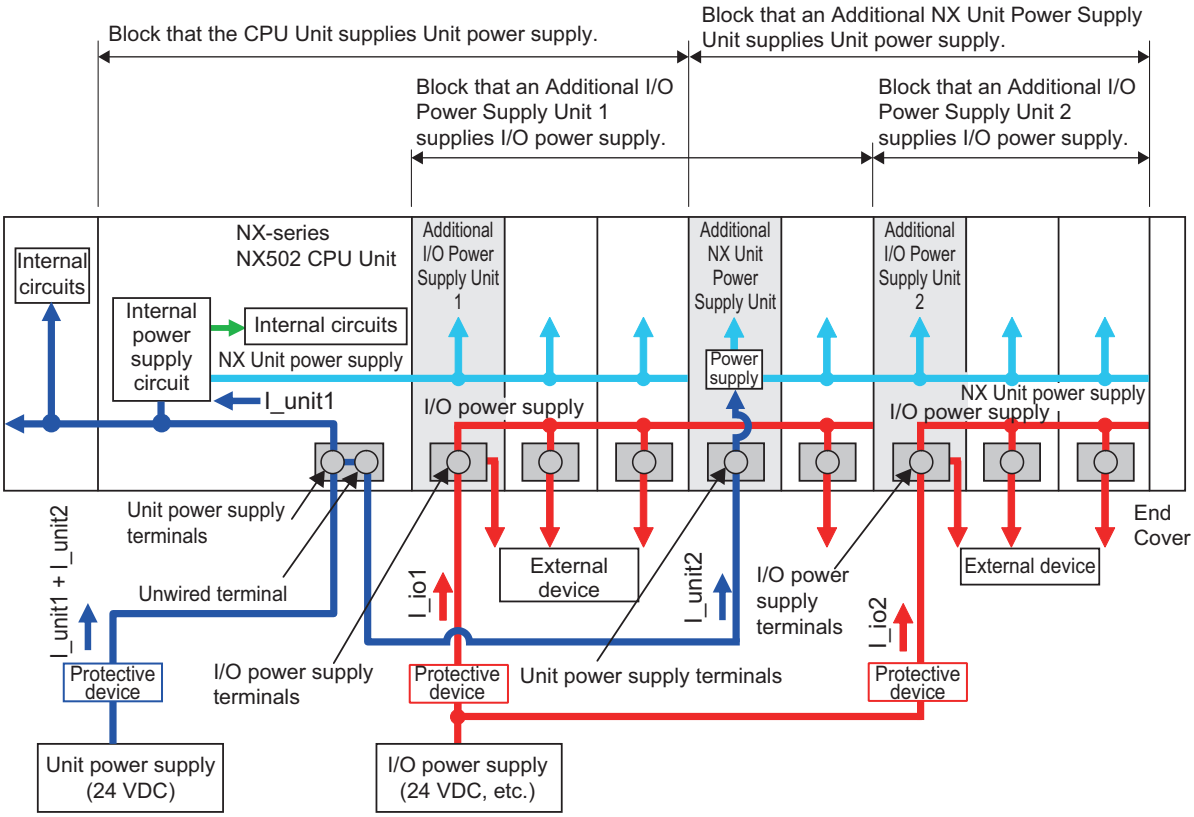

*1. The minimum value is selected among the rated currents of the multiple I/O Power Supply Units connected to the protective device. If, for example, two rated currents of 10 A and 4 A are used, 4 A will be selected.

- When Total Current Consumption for All Blocks Does Not Exceed the Rated Current

  In this example, the current consumption from each power supply is as follows:

  Current consumption from Unit power supply: I_unit1 + I_unit2 ≤ Lowest rated current

  Current consumption from I/O power supply for NX Units: I_io1 + I_io2 ≤ Lowest rated current*1

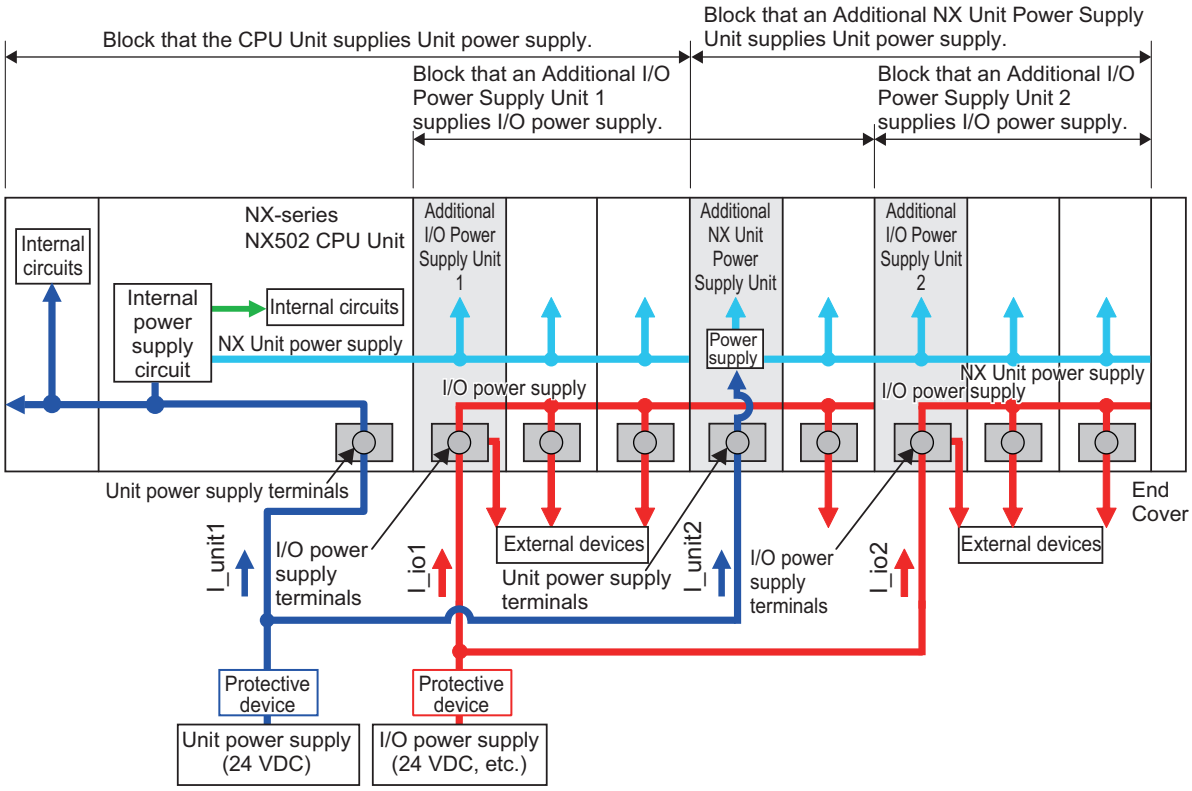

*1. The minimum value is selected among the rated currents of the multiple I/O power supply units connected to the protective device. If, for example, two rated currents of 10 A and 4 A are used, 4 A will be selected.

5

Installation and Wiring

This section describes how to install and wire the NX-series NX502 CPU Unit as well as details on installation locations.

5-1 Processing at Power ON and Power OFF 5-2
5-1-1 Power ON Operation 5-2
5-1-2 Power OFF Operation 5-3
5-1-3 Resetting the Controller from the Sysmac Studio 5-5

5-2 Fail-safe Circuits 5-6

5-3 Mounting and Removing Units 5-8
5-3-1 Installation in a Control Panel 5-8
5-3-2 Preparations for Installation 5-12
5-3-3 Installing the CPU Unit 5-14
5-3-4 Attaching Markers 5-17
5-3-5 Installing and Connecting NX Units 5-18
5-3-6 Installing and Connecting X Bus Units 5-21
5-3-7 Mounting the End Cover 5-22
5-3-8 Mounting the End Plates 5-23
5-3-9 Installing and Removing the SD Memory Card 5-24
5-3-10 Battery Installation 5-27
5-3-11 Removing CPU Unit 5-29
5-3-12 Removing NX Units 5-30
5-3-13 Removing X Bus Units 5-31
5-3-14 Assembled Appearance and Dimensions 5-32

5-4 Wiring 5-36
5-4-1 Wiring the Unit Power Supply 5-36
5-4-2 Wiring the Additional NX Unit Power Supply Unit 5-37
5-4-3 Wiring the Additional I/O Power Supply Unit 5-37
5-4-4 Wiring the Protective Devices 5-37
5-4-5 Grounding 5-37
5-4-6 Wiring the Built-in EtherCAT Port 5-41
5-4-7 Wiring the Built-in EtherNet/IP Port 5-41
5-4-8 Wiring to the CPU Unit Terminal Block 5-42

5-5 Control Panel Installation 5-57
5-5-1 Temperature 5-57
5-5-2 Humidity 5-58
5-5-3 Vibration and Shock 5-59
5-5-4 Atmosphere 5-59
5-5-5 Electrical Environment 5-59
5-5-6 Grounding 5-64

5-1 Processing at Power ON and Power OFF

⚠ WARNING

- Do not touch any of the terminals or terminal blocks while the power is being supplied.
  Doing so may result in electric shock.
- Do not attempt to take any Unit apart.
  In particular, high-voltage parts are present in the Power Supply Unit while power is supplied or immediately after power is turned OFF. Touching any of these parts may result in electric shock. There are sharp parts inside the Unit that may cause injury.

5-1-1 Power ON Operation

Precautions for Safe Use

It takes a certain time for startup to enter RUN mode after the power supply is turned ON, depending on the type and configuration of the Unit and its settings.
During startup, the outputs for NX Units on the CPU Rack will be OFF. Note that the outputs on the slaves will behave according to the setting values.
Therefore, use the system-defined variables and the device variables for each Unit in the user program to confirm that startup processing and I/O data communications are established before attempting control operations.
External communications are also not performed during startup.

Operation Until Operation Ready Status

Once the Unit power supply to the Unit power supply terminal starts, a certain time elapses depending on the type and configuration of the Unit and its settings before the CPU Unit enters the operation-ready status. This period is called the *startup status*.

The *startup* time depends on the slave/NX Unit configuration*1, user program, SD Memory Card usage, SD Memory Card self-diagnosis usage*2, etc.

While the CPU Unit is in the startup status, the RUN indicator flashes at a one second interval.

*1. Some EtherCAT slaves can set a maximum standby time of 1 to 200 seconds. For the CPU Unit, however, the operation-ready status exists as soon as the EtherCAT Master Function Module is functioning, regardless of the standby time of the EtherCAT slaves. For the EtherCAT Master Function Module, slaves that do not start within the maximum waiting time are treated as having an error.

*2. This function performs self-diagnosis on the inserted SD Memory Card. This is executed if the self-diagnosis at startup is enabled in the **Operation Settings** under **Configurations and Setup** − **Controller Setup** in the Sysmac Studio.

The following processing is performed during the *startup* status of the CPU Unit.

Process	Description
Self diagnosis at startup	Operation is monitored for the following errors: Power Supply Error, CPU Unit Error, Hardware Initialization Error, and System Initialization Error. *1

Process	Description
Data check	The *_RetainFail* (Retention Failure Flag) system-defined variable changes to TRUE when the values of variables for which the Retain attribute was set to retain the values were not retained after a power interruption.
Recording Power Turned ON and Power Interrupted events	The Power Turned ON and Power Interrupted events are recorded.

*1. Refer to the *NJ/NX-series Troubleshooting Manual (Cat. No. W503)* for information on the Power Supply Error, CPU Unit Error, Hardware Initialization Error, and System Initialization Error.

Operating Mode at Startup

The system will immediately enter RUN mode if RUN mode (default) is set as the startup operating mode. The system will immediately enter PROGRAM mode if PROGRAM mode is set as the startup operating mode.

• RUN Mode Set as Startup Mode

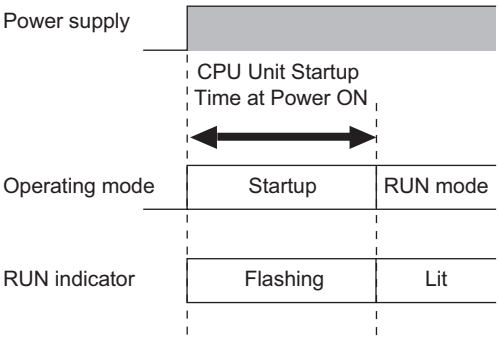

• PROGRAM Mode Set as Startup Mode

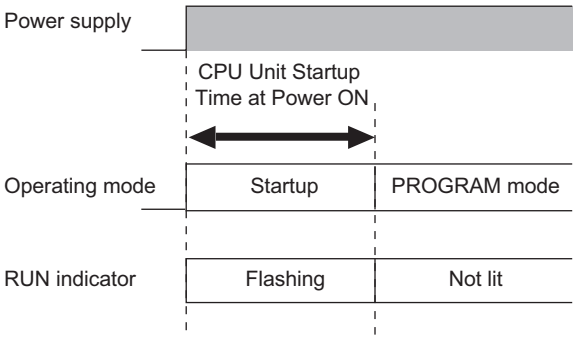

5-1-2 Power OFF Operation

⚠ WARNING

The NX-series Controller continues normal operation for a certain period of time when a momentary power interruption occurs. This means that the NX-series Controller may receive incorrect signals from external devices that are also affected by the power interruption.
Accordingly, take suitable actions, such as external fail-safe measures and interlock conditions, to monitor the power supply voltage of the external device as required.

A power OFF status is detected when the Unit power supply drops to the following voltage or lower or when the following time has elapsed due to a momentary power interruption.

Momentary power interruption voltage	Power OFF detection time
20.4 VDC or less	2 ms min.*1 to 4 ms max.

*1. A power OFF status may be detected when a momentary power interruption of 2 ms or less occurs consecutively.

Operation at Power OFF

Execution of the user program is ended if a power interruption exceeds the time shown in the table below. The processing after power interruption confirmation (described below) is performed, and then the system (i.e., CPU Unit) stops.

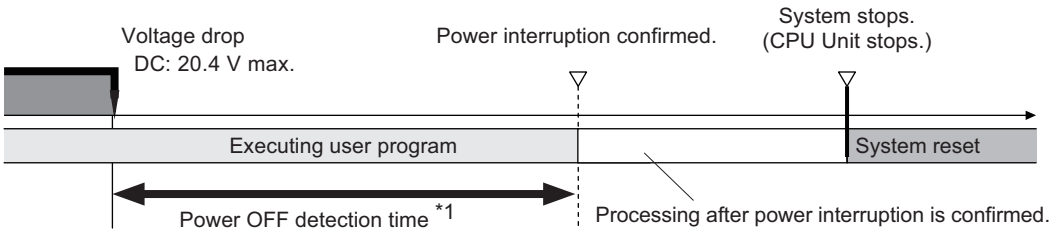

*1. The power OFF detection time is 2 to 4 ms.

As shown in the following figure, the system (i.e. CPU Unit) will stop even if the voltage recovers after the power interruption detection time.

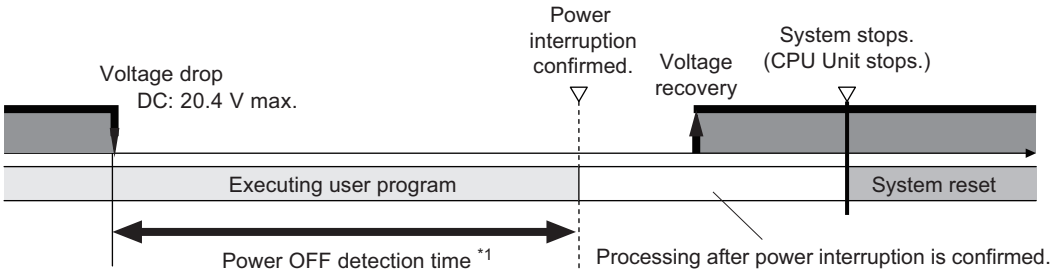

*1. The power OFF detection time is 2 to 4 ms.

After stopping, the system will restart if the power supply remains recovery.

The table below defines the time that is used in the above two figures.

Item	Description
Power OFF detection time	The time from when the power supply voltage drops until the CPU Unit starts processing after the power interruption is confirmed. The CPU Unit continues to operate normally until the power interruption is confirmed.

Momentary Power Interruption with Continued Operation

Execution of the user program will continue if a momentary power interruption is less than the following times.

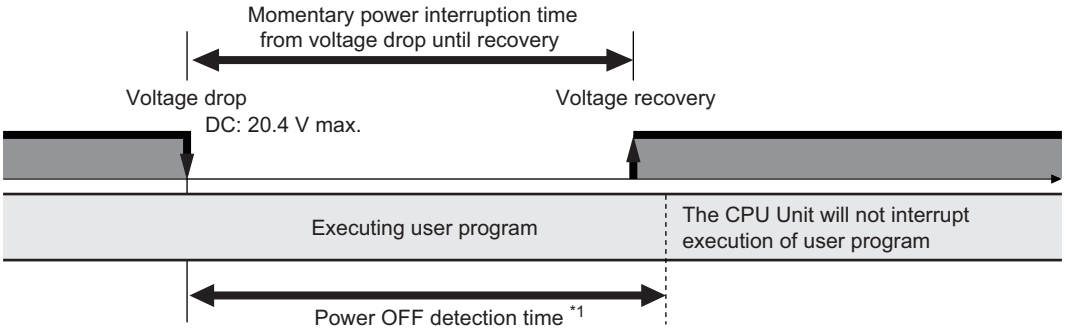

*1. The power OFF detection time is 2 to 4 ms.

Processing after Power Interruption Is Confirmed

After a power interruption is confirmed, the CPU Unit performs the following processing and then stops.

Item		Description
I/O refresh		I/O refresh stops, and all outputs are turned OFF. Tag data links via the EtherNet/IP stop.
Processing	SD Memory Card access in progress	Any writing is interrupted, files are closed, and the Card is unmounted.
	Transferring user program (including online editing)	Interrupted. As a result, an error will occur the next time that the power is turned ON. The Controller will not operate.
	User program execution	User program execution is aborted even during execution of an instruction.
Saving event log		The time that a power interruption occurs and the cause (primary power interruption) of the interruption are recorded.

5-1-3 Resetting the Controller from the Sysmac Studio

You can reset the CPU Unit from the Sysmac Studio.
A reset from the Sysmac Studio follows the same operation as cycling the power supply of the Unit power.
Resetting is possible, however, only when the CPU Unit is in PROGRAM mode.
Confirm the following status before the CPU Unit Reset.

- Check the status of output loads.
- Make sure that SD Memory Card access is not in progress.

5-2 Fail-safe Circuits

⚠ WARNING

Provide safety measures in external circuits to ensure safety in the system if an abnormality occurs due to malfunction of the CPU Unit, slaves, or Units or due to other external factors affecting operation. Not doing so may result in serious accidents due to incorrect operation.

- Emergency stop circuits, interlock circuits, limit circuits, and similar safety measures must be provided in external control circuits.
- The Controller outputs may remain ON or OFF due to deposition or burning of the output relays or destruction of the output transistors. As a countermeasure for such problems, external safety measures must be provided to ensure safe operation of the system.

⚠ WARNING

The CPU Unit will turn OFF digital outputs on the CPU Rack in the following cases.

- While the CPU Unit is on standby until RUN mode is entered after the power is turned ON
- If an error occurs in the power supply
- If a system initialization error occurs

Digital outputs on the CPU Rack will produce outputs according to the settings in the following cases.

- If a CPU Unit error or CPU Unit reset occurs
- If a major fault level Controller error occurs

External safety measures must be provided to ensure safe operation of the system in such cases.

⚠ WARNING

- If there is interference in remote I/O communications or if a major fault level error occurs, output status will depend on the products that are used.
  Confirm the operation that will occur when there is interference in communications or a major fault level error, and implement safety measures.
  Correctly set all of the settings in the slaves and Units.
- If external power supplies for Units, slaves or other devices are overloaded or short-circuited, the voltage will drop, outputs will turn OFF, and the system may be unable to read inputs. Provide external safety measures in controls with monitoring of external power supply voltage as required so that the system operates safely in such a case.
- Unintended outputs may occur when an error occurs in variable memory. As a countermeasure for such problems, external safety measures must be provided to ensure safe operation of the system.
- Provide measures in the communications system and user program to ensure safety in the overall system even if errors or malfunctions occur in data link communications or remote I/O communications.
- You must take fail-safe measures to ensure safety in the event of incorrect, missing, or abnormal signals caused by broken signal lines, momentary power interruptions, or other causes.
  Not doing so may result in serious accidents due to incorrect operation.

Order of Powering On and Off the Controller and Controlled System

Outputs from Units, such as DC Output Units, may malfunction momentarily when the Unit power supply is turned ON. This may cause problems in the system if the Unit power supply is turned ON after the I/O power supply (i.e. controlled system's power supply) is turned ON. To prevent possible malfunctions, configure an external circuit that prevents the power supply to the controlled system from turning ON before the power supply to the Controller itself.
Also, the external circuit must be configured so that the Unit power supply turns OFF only after the power supply to the controlled system has turned OFF.

Precautions for Safe Use

It takes a certain time for startup to enter RUN mode after the power supply is turned ON, depending on the type and configuration of the Unit and its settings.
During startup, the outputs for NX Units on the CPU Rack will be OFF. Note that the outputs on the slaves will behave according to the setting values.
Therefore, use the system-defined variables and the device variables for each Unit in the user program to confirm that startup processing and I/O data communications are established before attempting control operations.
External communications are also not performed during startup.

Failure of the Output Section of the Output Unit

It is possible for an output to remain ON due to a malfunction in the internal circuit of the Output Unit, such as a relay or transistor in the output section. Be sure to add any circuits necessary outside of the Controller to ensure the safety of the system in the event that an output section fails to go OFF.

Interlock Circuits

When the Controller controls an operation such as the clockwise and counterclockwise operation of a motor, provide an external interlock such as the one shown in the following example to prevent both the forward and reverse outputs from turning ON at the same time if required by the application.

Example:

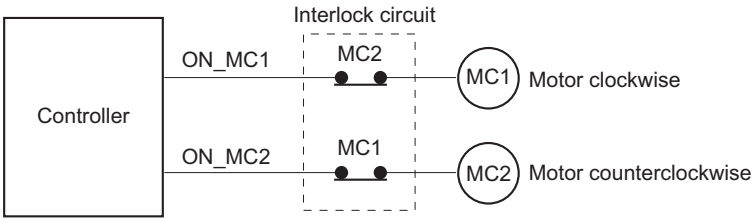

This circuit prevents outputs MC1 and MC2 from both being ON at the same time even if both Controller outputs ON_MC1 and ON_MC2 are ON due to a malfunction.

5-3 Mounting and Removing Units

This section describes how to mount and remove NX-series Units.

Precautions for Safe Use

Always turn OFF the power supply to the Controller before you attempt any of the following.
- Mounting or removing the Units
- Assembling the Units
- Setting DIP switches or rotary switches
- Connecting cables or wiring the system
- Connecting or disconnecting the terminal blocks or connectors

The power supply circuit in the CPU Unit may continue to supply power to the Controller for a few seconds after the power supply turns OFF. The POWER indicator is lit during this time. Confirm that the POWER indicator is not lit before you perform any of the above.

Precautions for Correct Use

- Follow the instructions in this manual to correctly perform installation.
- Do not operate or store the Controller in the following locations. Doing so may result in burning, in operation stopping, or in malfunction.
  a) Locations subject to direct sunlight
  b) Locations subject to temperatures or humidity outside the range specified in the specifications
  c) Locations subject to condensation as the result of severe changes in temperature
  d) Locations subject to corrosive or flammable gases
  e) Locations subject to dust (especially iron dust) or salts
  f) Locations subject to exposure to water, oil, or chemicals
  g) Locations subject to shock or vibration
- Take appropriate and sufficient countermeasures when installing the Controller in the following locations.
  a) Locations subject to strong, high-frequency noise
  b) Locations subject to static electricity or other forms of noise
  c) Locations subject to strong electromagnetic fields
  d) Locations subject to possible exposure to radioactivity
  e) Locations close to power lines

5-3-1 Installation in a Control Panel

Installation in Cabinets or Control Panels

When the NX-series Controller is being installed in a cabinet or control panel, be sure to provide proper ambient conditions as well as access for operation and maintenance.

● Temperature Control

The ambient operating temperature of the NX-series Controller must be within the range of 0 to 55°C. When necessary, take the following steps to maintain the proper temperature.
- Provide enough space for good air flow.
- Do not install the Controller above equipment that generates a large amount of heat such as heaters, transformers, or high-capacity resistors.
- If the ambient temperature exceeds 55°C, install a cooling fan or air conditioner.

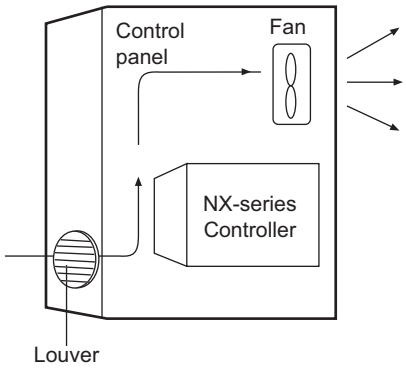

● Accessibility for Operation and Maintenance

- To ensure safe access for operation and maintenance, separate the Controller as much as possible from high-voltage equipment and power machinery.
- It will be easy to operate the Controller if it is mounted at a height of 1.0 to 1.6 m above the floor.

● Improving Noise Resistance

- Do not mount the Controller in a control panel containing high-voltage equipment.
- Install the Controller at least 200 mm away from power lines.

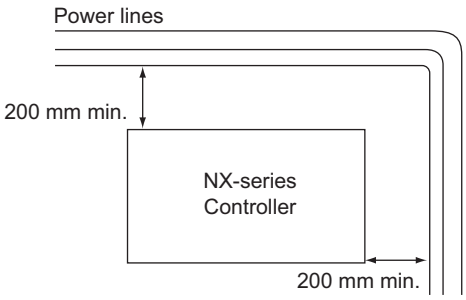

- Ground the mounting plate between the Controller and the mounting surface.

● Controller Orientation

- Each Rack must be mounted in the following position to provide proper cooling. This position is called an upright position.

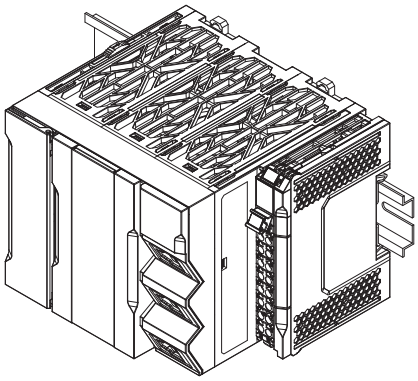

- Do not install a Rack in any of the following positions.

Mounting with the DIN Track on the Bottom

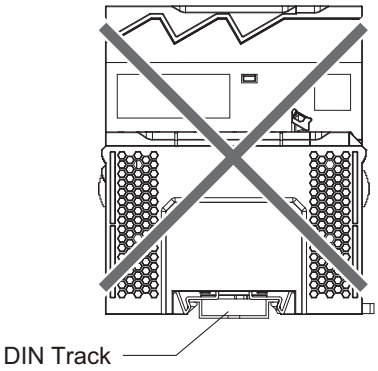

Mounting with the DIN Track on the Top

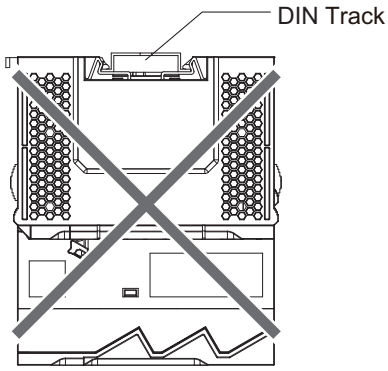

Mounting with the Rack Upside Down

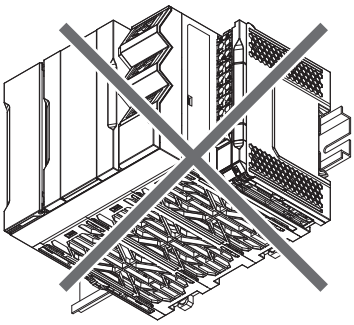

Mounting with the DIN Track Installed Vertically

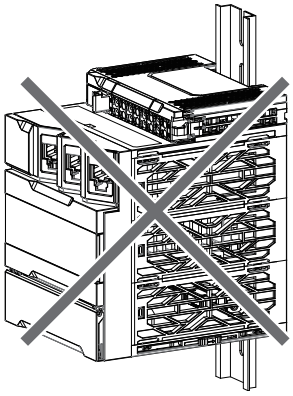

Installation Method in Control Panels

An NX-series Controller must be mounted inside a control panel on DIN Track.

- Consider the width of wiring ducts, wiring, ventilation, and Unit replacement when determining the space between the CPU Rack and other devices.

Additional Information

A Controller must be mounted on DIN Track.
It cannot be mounted with screws.

● Wiring Ducts

Whenever possible, route I/O wiring through wiring ducts.
Install mounting bracket so that it is easy to fish wire through the duct. It is handy to have the duct at the same height as the CPU Rack.

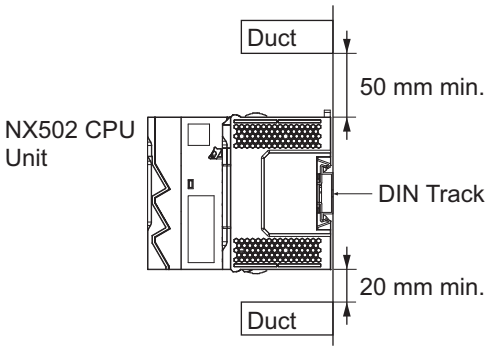

● Wiring Duct Example

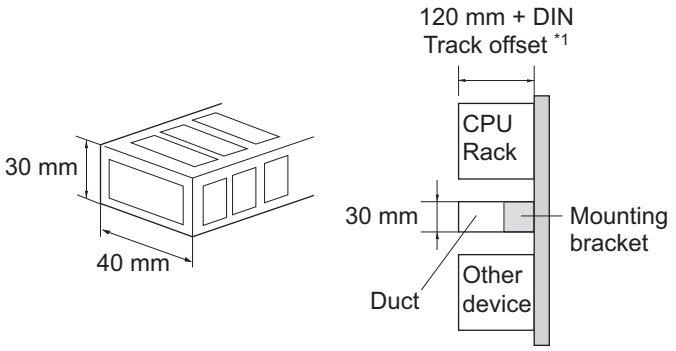

*1. It varies depending on the DIN Track to be used. Refer to *Installation Dimensions* on page 5-32 under *5-3-14 Assembled Appearance and Dimensions* on page 5-32 for details. It corresponds to the dimension (B).

● Routing Wiring Ducts

Install the wiring ducts at least 50 mm away from the tops of the Rack and any other objects (e.g., ceiling, wiring ducts, structural supports, devices, etc.) to provide enough space for air circulation and replacement of Units.

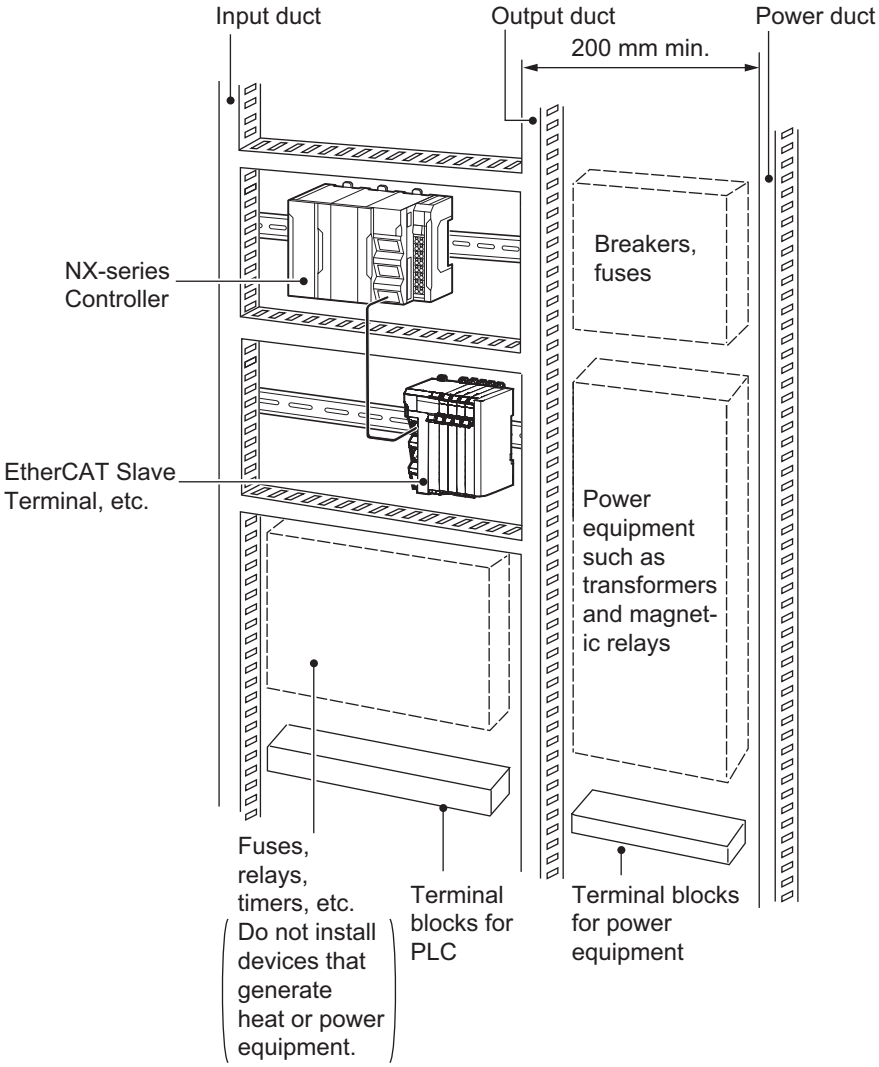

5-3-2 Preparations for Installation

We recommend using the following products to install the Unit on a DIN Track.

Name	Model	Manufacturer	Remarks
35-mm DIN Track	PFP-50N	OMRON Corporation	• Length: 50 cm • Material: Aluminum • Surface treatment: Insulated
	PFP-100N	OMRON Corporation	• Length: 100 cm • Material: Aluminum • Surface treatment: Insulated
	NS 35/ 7,5 PERF	Phoenix Contact	• Length: 75.5, 95.5, 115.5, or 200 cm • Material: Steel • Surface treatment: Conductive
	NS 35/ 15 PERF	Phoenix Contact	• Length: 75.5, 95.5, 115.5, or 200 cm • Material: Steel • Surface treatment: Conductive
End Plate	PFP-M	OMRON Corporation	Two End Plates are required for each CPU Rack.
	CLIPFIX 35	Phoenix Contact	Two End Plates are required for each CPU Rack.

Not all of the combinations of the DIN Tracks and End Plates listed above are possible.
Confirm applicability of the combinations in the following table.

DIN Track model	PFP-M (OMRON)	CLIPFIX 35 (Phoenix Contact)
PFP-50N	Possible	Possible
PFP-100N	Possible	Possible
NS 35/ 7,5 PERF	Possible	Possible
NS 35/ 15 PERF	Not possible	Possible

Also, use screws and washers of the following sizes to fix the DIN Tracks.

(a): Dimensions from the screw head to the fastening surface

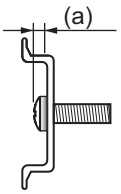

DIN Track model	Applicable screw size	(a)
PFP-50N	M4	4.1 mm max.
NS 35/ 7,5 PERF	M6	4.6 mm max.
NS 35/ 15 PERF	M6	10 mm max.

If you use any DIN Track other than those listed in the table above, refer to the dimensions shown in *5-3-14 Assembled Appearance and Dimensions* on page 5-32 and use proper screws and washers.

● DIN Tracks

PFP-100N/50N DIN Track

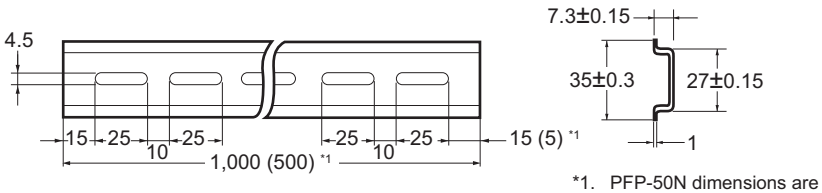

*1. PFP-50N dimensions are given in parentheses.

NS 35/ 7,5 PERF

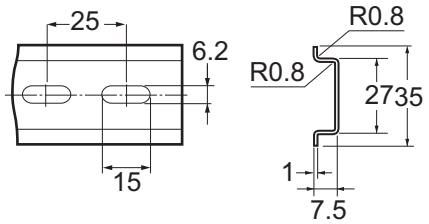

NS 35/ 15 PERF

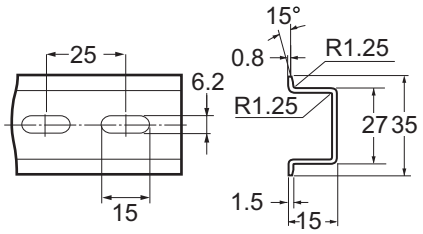

- **End Plate**

PFP-M (Two)

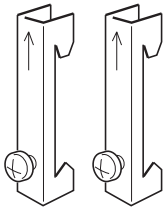

CLIPFIX 35 (Two)

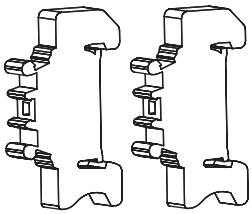

5-3-3 Installing the CPU Unit

This section describes how to install the CPU Unit.

Precautions for Safe Use

- Do not apply labels or tape to the Unit. When the Unit is installed or removed, adhesive or scraps may adhere to the pins in the NX bus connector, which may result in malfunctions.
- Do not touch the pins in the NX bus connector on the Unit. Dirt may adhere to the pins in the NX bus connector, which may result in malfunctions.

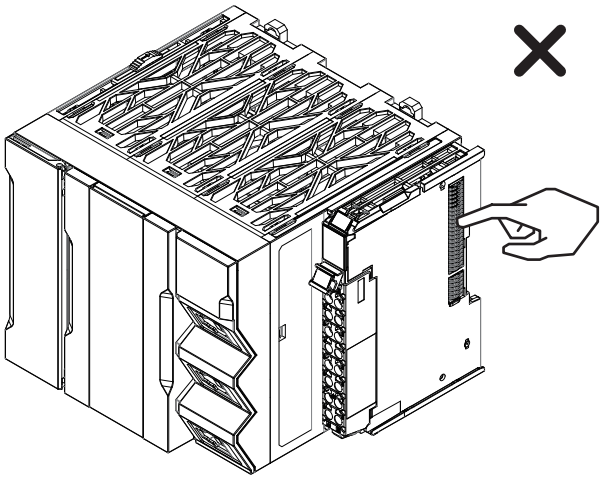

- Do not write anything with ink within the restricted region of the CPU Unit that is shown in the following figure. Also do not get this area dirty. When the Unit is installed or removed, ink or dirt may adhere to the pins in the NX bus connector, which may result in malfunctions in the Unit.
  Refer to the user's manual for the connected NX Unit for information on the restricted region for the NX Unit.

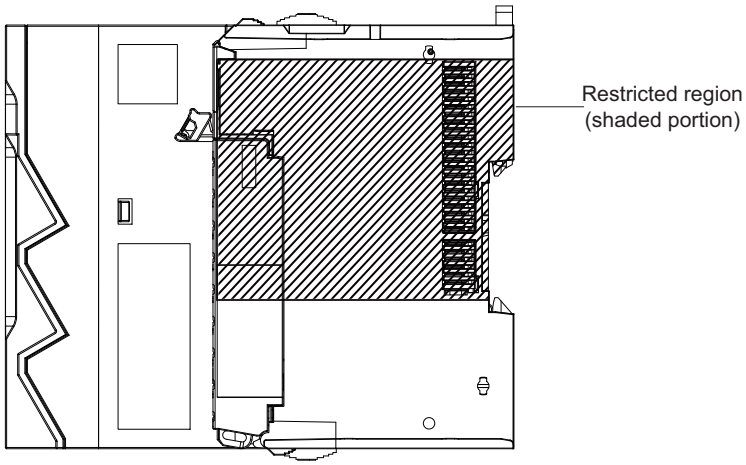

Precautions for Correct Use

- When you handle the Unit, be careful not to apply stress to the pins in the NX bus connector and X Bus connector.
  If the Unit is installed and the power supply is turned ON when the pins in the connector are deformed, contact failure may cause malfunctions.

1 Install the DIN Track.

- Using a PFP-50N/100N DIN Track

Use one M4 screw for each three holes in the DIN Track. There must be a screw for each interval of 105 mm or less. The screw tightening torque is 1.2 N·m.

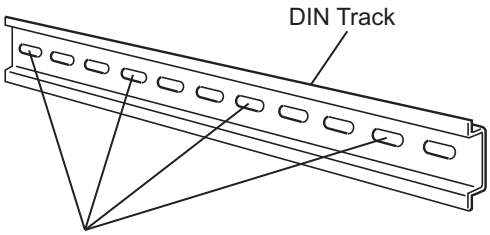

Use one screw for each three holes.

• Using an NS 35/7,5 PERF or NS 35/15 PERF DIN Track

Use one M6 screw for each four holes in the DIN Track. There must be a screw for each interval of 100 mm or less. The screw tightening torque is 5.2 N·m.

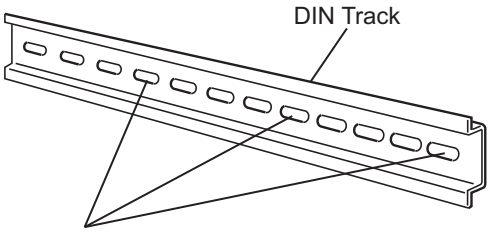

Use one screw for each four holes.

2 Make sure that the DIN Track mounting hook on the CPU Unit is in the unlock position.

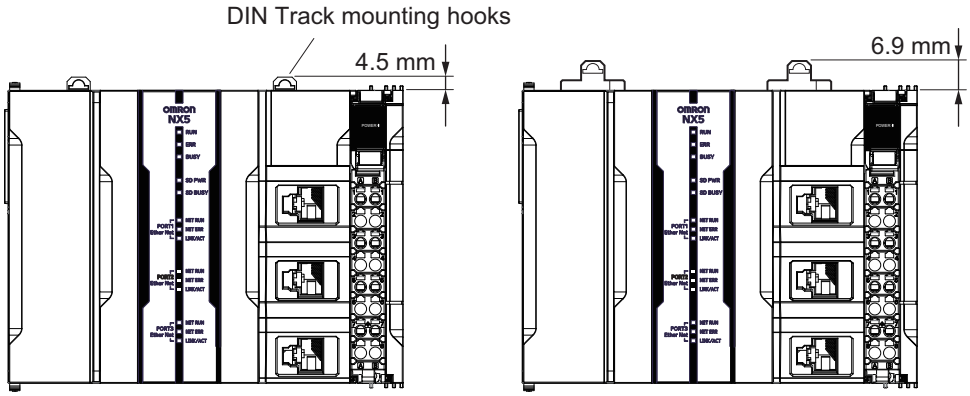

DIN Track Mounting Hooks in Locked Position

DIN Track Mounting Hooks in Unlocked Position

If the DIN Track mounting hooks are pulled up, they are in the unlocked position.
If the DIN Track mounting hooks are pressed down, they are in the locked position.
Use a flat-blade screwdriver to pull up the DIN Track mounting hook on the Unit to release the locked position.

3 Press the CPU Unit straight against the DIN Track.

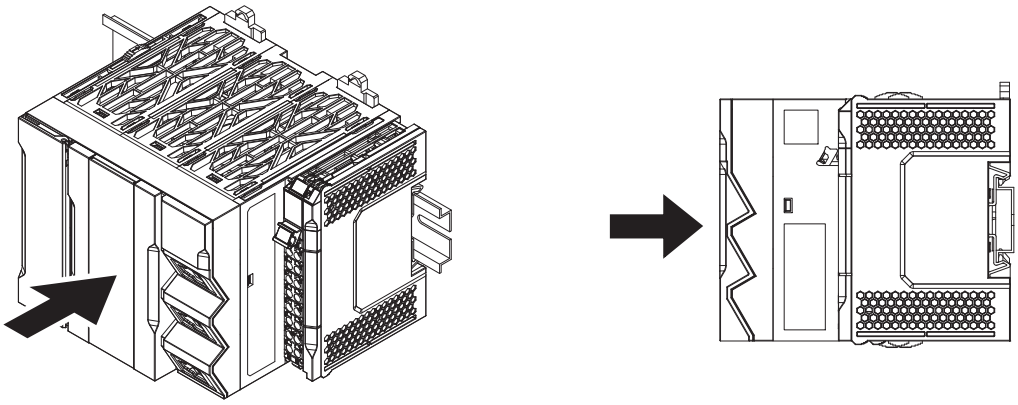

4 Press the DIN Track mounting hooks down to the locked position.
After mounting, make sure that the CPU Unit and the End Cover are securely mounted on the DIN Track.

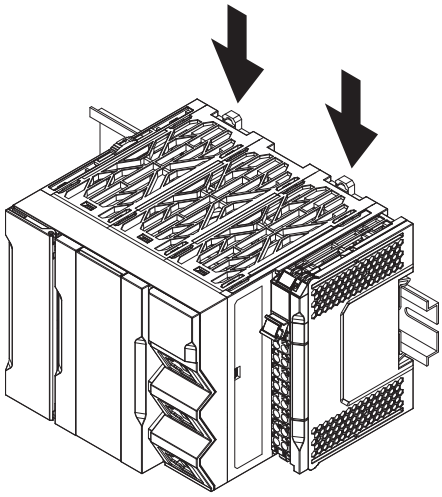

5-3-4 Attaching Markers

Markers can be attached to NX Units and their terminal blocks to identify them.
The plastic markers made by OMRON are installed for the factory setting. The ID information can be written on them.
Commercially available markers can also be installed.
Replace the markers made by OMRON if you use commercially available markers now.

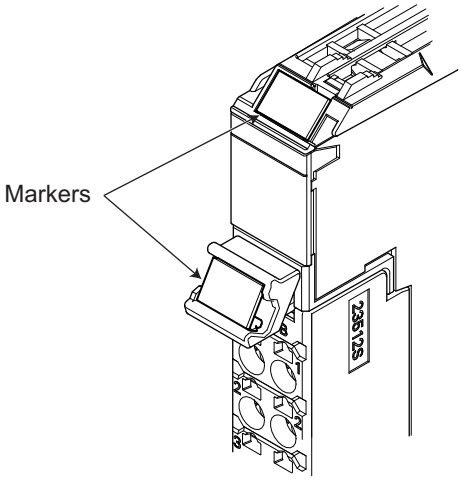

The marker attachment locations on the NX Units depend on the type of external connection terminals. Refer to the user's manual for the NX Units that you will use for the marker attachment locations.

● Installation Method

Insert the protrusions on the markers into the marker attachment locations on the NX Units and terminal blocks on NX Units.

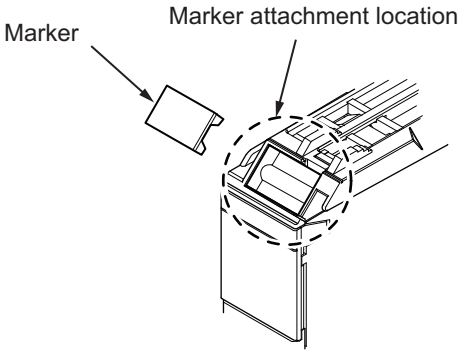

<Unit>

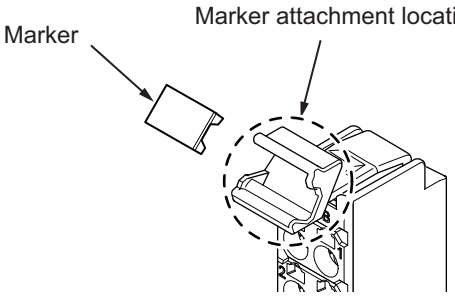

<Terminal block>

● Commercially Available Markers

Commercially available markers are made of plastic and can be printed on with a special printer. To use commercially available markers, purchase the following products.

Product name	Model number	
	Manufactured by Phoenix Contact	Manufactured by Weidmuller
Markers	UC1-TMF8	DEK 5/8
Special marker printer	UM EN BLUEMARK X1	PrintJet PRO

The markers made by OMRON cannot be printed on with commercially available special printers.

5-3-5 Installing and Connecting NX Units

This section describes how to mount NX Units to the CPU Unit and how to connect NX Units to each other.

Precautions for Safe Use

- Always turn OFF the power supply before mounting the Units. If the power supply is not OFF, the Unit may result in malfunction or may be damaged.
- Do not apply labels or tape to the Unit. When the Unit is installed or removed, adhesive or scraps may adhere to the pins in the NX bus connector, which may result in malfunctions.
- Do not touch the pins in the NX bus connector on the Unit. Dirt may adhere to the pins in the NX bus connector, which may result in malfunctions.

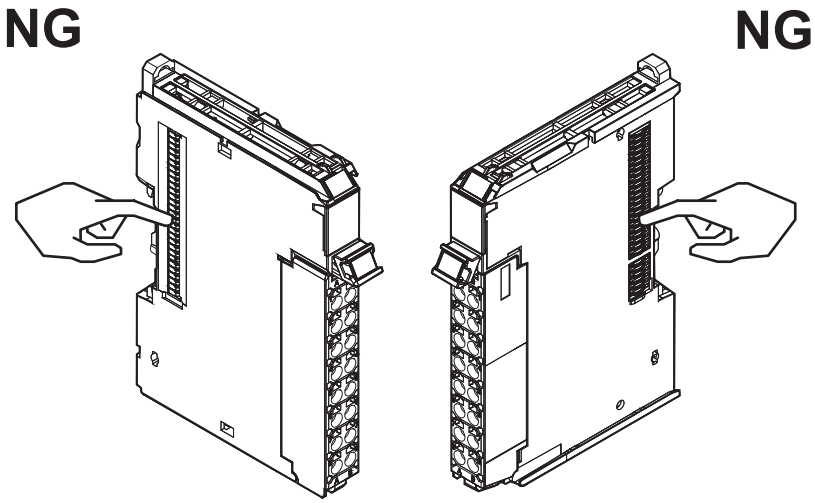

Example: NX Unit (12 mm width)

- Do not write on an NX Unit with ink within the restricted region that is shown in the following figure. Also do not get this area dirty. When the Unit is installed or removed, ink or dirt may adhere to the pins in the NX bus connector, which may result in malfunctions in the CPU Rack.

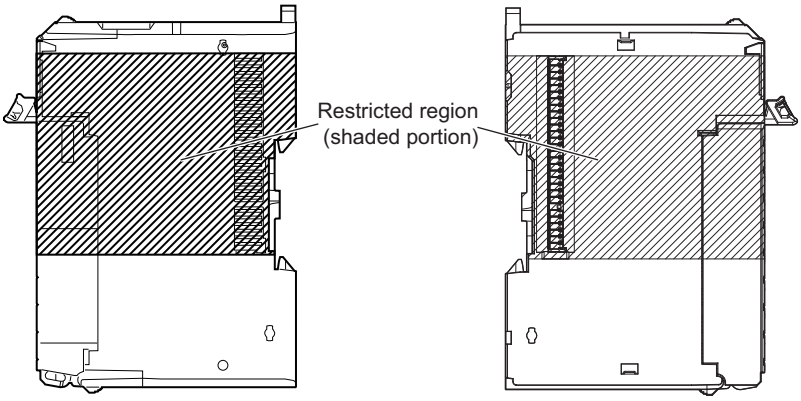

Precautions for Correct Use

- When you mount an NX Unit to the CPU Unit or when you connect NX Units to each other, always mount the Units one at a time on the DIN Track.
  If you connect NX Units to each other and attempt to mount them together to the DIN Track at the same time, the Units may separate from each other and fall.
- When you handle a Unit, be careful not to apply stress to the pins in the NX bus connector.
  If the Unit is installed and the power supply is turned ON when the pins in the NX bus connector are deformed, contact failure may cause malfunctions.
- When you handle a Unit, be careful not to touch or bump the pins in the NX bus connector.

Mounting NX Unit to CPU Unit

Mount the NX Unit to the CPU Unit after removing the End Cover.

1 From the front of the CPU Unit, engage the Unit hookup guides on the NX Unit with the Unit hookup guides on the Communication Control Unit.

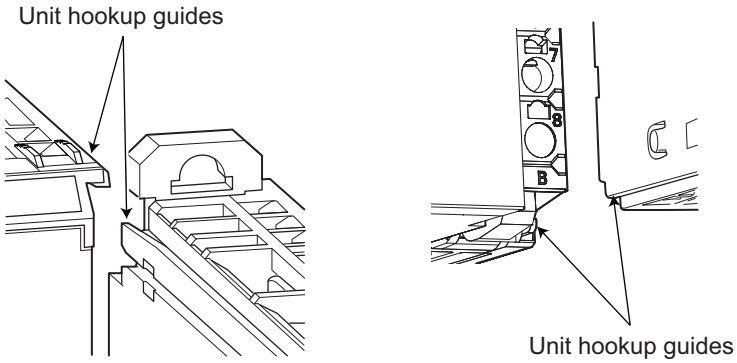

2 Slide the NX Unit on the hookup guides.

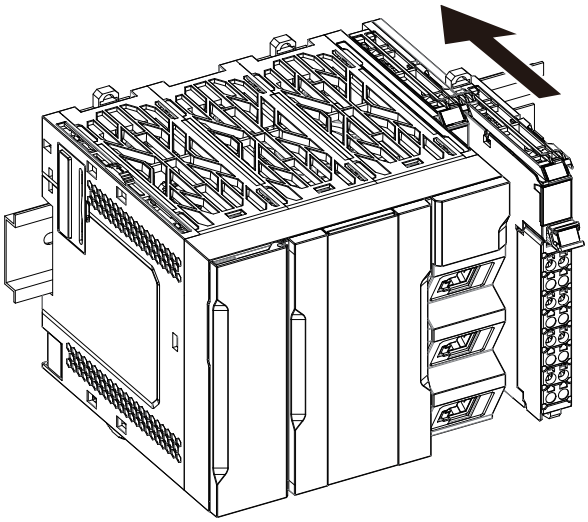

3 Press the NX Unit with a certain amount of force against the DIN Track until you hear the DIN Track mounting hook lock into place.
When you mount the NX Unit, it is not necessary to release the DIN Track mounting hook on the NX Unit. After you mount the NX Unit, make sure that it is locked to the DIN Track.

Additional Information

It is not normally necessary to unlock the DIN Track mounting hook when you mount the NX Unit. However, if you mount the NX Unit on a DIN Track that is not one of the recommended DIN Tracks, the DIN Track mounting hook may not lock properly. If that happens, unlock the DIN Track mounting hook at the start of the procedure, mount the NX Unit to the DIN Track, and then lock the DIN Track mounting hook.

Mounting NX Units to Each Other

Use the following procedure to mount NX Units to each other.

1 From the front of the previously mounted NX Unit, engage the Unit hookup guides on a new Unit with the Unit hookup guides on the previously mounted NX Unit.

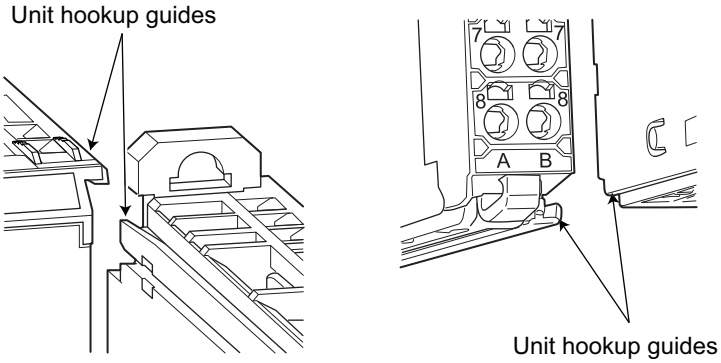

2 Slide the NX Unit on the hookup guides.

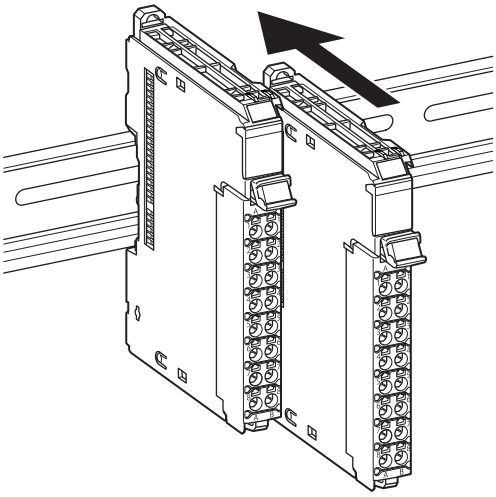

3 Press the NX Unit with a certain amount of force against the DIN Track until you hear the DIN Track mounting hook lock into place.
When you mount the NX Unit, it is not necessary to release the DIN Track mounting hook on the NX Unit.
After you mount the NX Unit, make sure that it is locked to the DIN Track.

Additional Information

It is not normally necessary to unlock the DIN Track mounting hook when you mount the NX Unit. However, if you mount the NX Unit on a DIN Track that is not one of the recommended DIN Tracks, the DIN Track mounting hook may not lock properly. If that happens, unlock the DIN Track mounting hook at the start of the procedure, mount the NX Unit to the DIN Track, and then lock the DIN Track mounting hook.

5-3-6 Installing and Connecting X Bus Units

This section describes how to mount X Bus Units to the CPU Unit and how to connect X Bus Units to each other.

Precautions for Safe Use

- Always turn OFF the power supply before mounting the Units. If the power supply is not OFF, the Unit may result in malfunction or may be damaged.

Precautions for Correct Use

- When you mount an X Bus Unit to the CPU Unit or when you connect X Bus Units to each other, always mount the Units one at a time on the DIN Track. If you connect X Bus Units to each other and attempt to mount them together to the DIN Track at the same time, the Units may separate from each other and fall.
- When you handle a Unit, be careful not to apply stress to the pins in the X Bus connector. If the Unit is installed and the power supply is turned ON when the pins in the X Bus connector are deformed, contact failure may cause malfunctions.
- When you handle a Unit, be careful not to touch or bump the pins in the X Bus connector.

Installing X Bus Unit to CPU Unit

If the CPU Unit has a connector cover, mount the X Bus Unit to the CPU Unit after you remove the connector cover.

1 Release the DIN Track mounting hooks and the upper and lower sliders of the Unit in advance.

2 Slide the Unit to the right on the DIN Track to connect each other.

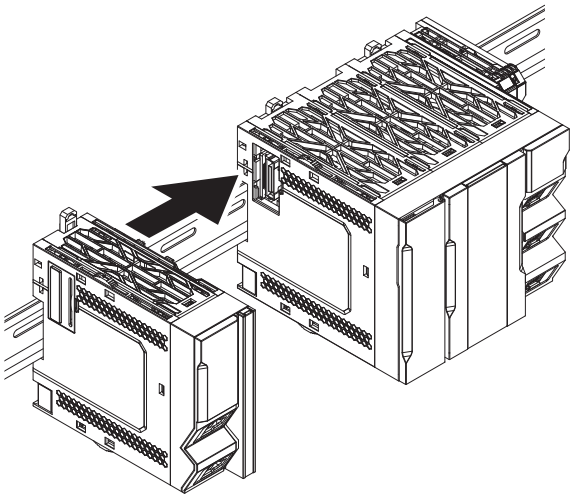

3 Slide and lock the DIN Track mounting hooks and the upper and lower sliders of the Unit until they click.

5-3-7 Mounting the End Cover

Always mount the End Cover (NX-END02) provided with the product to the right end of the CPU Rack (on the NX Unit side).
In addition, the attached cover is provided with the connector to the left end of the CPU Unit (on the X Bus Unit side). If the X Bus Unit is not connected, do not remove the attached cover.

Precautions for Safe Use

The End Cover has a metal portion and is heavier than it looks. Be careful not to drop it when handling.

Precautions for Correct Use

Always mount an End Cover to the end of the CPU Rack to protect the last Unit on the CPU Rack. Not mounting the End Cover may result in malfunction or failure of the CPU Unit.

1 From the front of the rightmost Unit, slide the End Cover along the Unit hookup guides on the rightmost Unit on the CPU Rack.

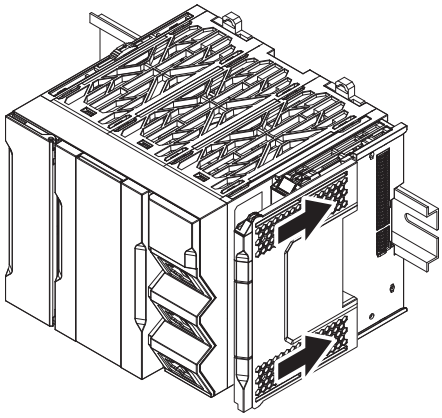

2 Press the End Cover firmly against the DIN Track until you hear it lock into place on the DIN Track.
After you mount the End Cover, make sure that it is securely mounted on the DIN Track.

5-3-8 Mounting the End Plates

After you mount the End Cover, always secure the Unit with End Plates at both sides.

Precautions for Correct Use

After you mount the Unit on the DIN Track, always secure it with End Plates at both sides. If you do not secure it, the Unit may be damaged or malfunction.

● Using PFP-M (OMRON)

To mount an End Plate, 1) hook the bottom of it on the bottom of the DIN Track and 2) rotate the End Plate to hook the top of it on the top of the DIN Track.
Then tighten the screw to lock the End Plate in place.

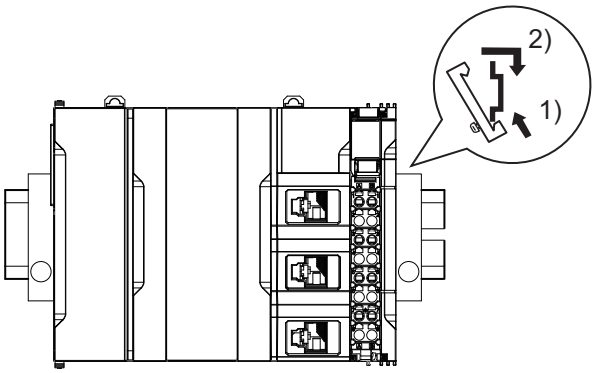

- **Using CLIPFIX 35 (Phoenix Contact)**

  To mount an End Plate, 1) hook the top of it on the top of the DIN Track and 2) rotate the Plate to hook the bottom of it on the bottom of the DIN Track. Press in until you hear the End Plate lock into place.

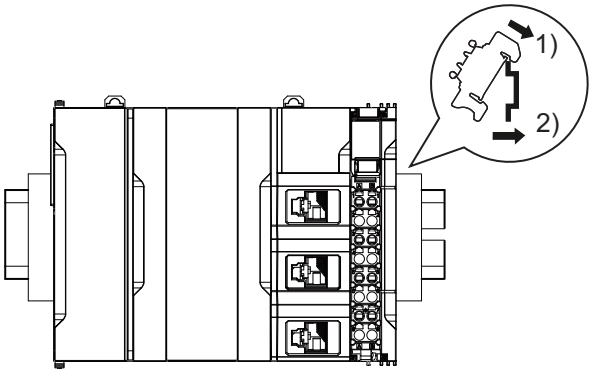

To remove an End Plate 1) insert the tip of a flat-blade screwdriver into groove “a” and 2) use “b” as a fulcrum and lift the end of the screwdriver, as shown in the following diagram.

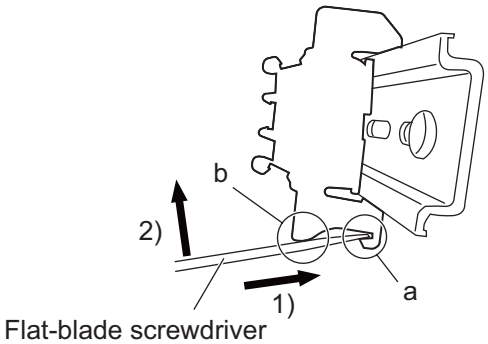

5-3-9 Installing and Removing the SD Memory Card

Before Using an SD Memory Card

- Keep the following precautions because an SD Memory Card may become unusable.
  a) Do not turn OFF the power supply to the Controller while the SD BUSY indicator is lit (i.e., while SD Memory Card access is in progress).
     The SD BUSY indicator is lit when the SD Memory Card is accessed from the user program or from a computer through FTP.

b) Do not remove the SD Memory Card while the SD BUSY indicator is lit or the SD PWR indicator is lit (i.e., while SD Memory Card power is supplied).
Press the SD Memory Card power supply switch and confirm that the SD BUSY indicator or SD PWR indicator is not lit before you remove the SD Memory Card.

- Never insert the SD Memory Card facing the wrong way.
  If the SD Memory Card is inserted forcibly, it may become unusable.
- To format the SD Memory Card (e.g., to delete all of the data), insert the SD Memory Card in the CPU Unit and perform the operation from the Sysmac Studio.
- The SD Memory Card uses flash memory, and so its service life is limited. When the end of the SD Memory Card's service life approaches, the ability to write data is lost, and data is sometimes not retained after writing. The service life depends on the size of the data that is written and on the ambient temperature. For the unlikely event that data is lost, it is recommended to periodically back up data.
- The service life may be extremely short if a non-OMRON SD Memory Card is used. Also, operation may be affected due to deterioration in writing performance.
- If you use an OMRON SD Memory Card, the end of the life of the SD Memory Card can be detected in the following ways.
  a) *_Card1Deteriorated* (SD Memory Card Life Warning Flag) system-defined variable
  b) *SD Memory Card Life Exceeded* event in the event log

Version Information

Combination of the CPU Unit version and SD Memory Card determines whether the SD memory card life expiration detection function can be used or not. Refer to *Specification of Supported SD Memory Cards, Folders, and Files* in the *NJ/NX-series CPU Unit Software User's Manual (Cat. No. W501)* for details.

Installing the SD Memory Card

1 Place your finger on the memory card cover located in the left side of the CPU Unit and open it to the right.

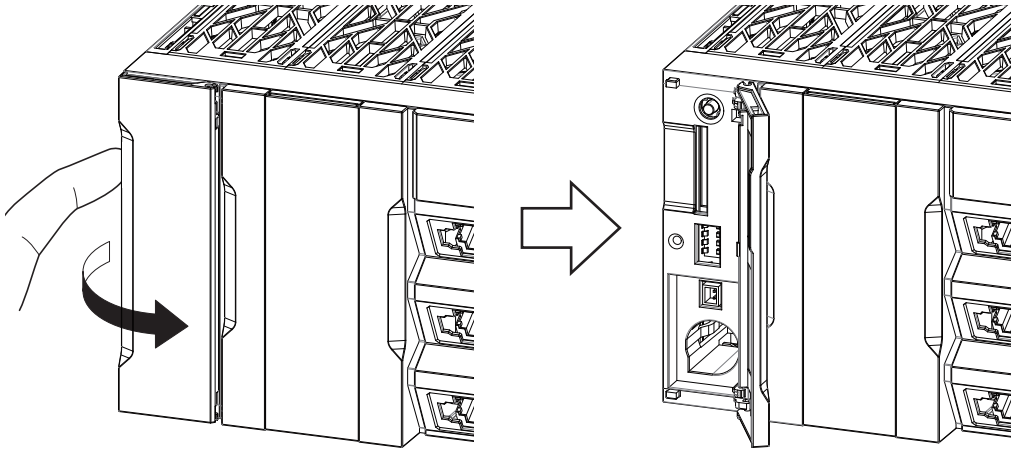

2 Insert the SD Memory Card with the label facing to the right.

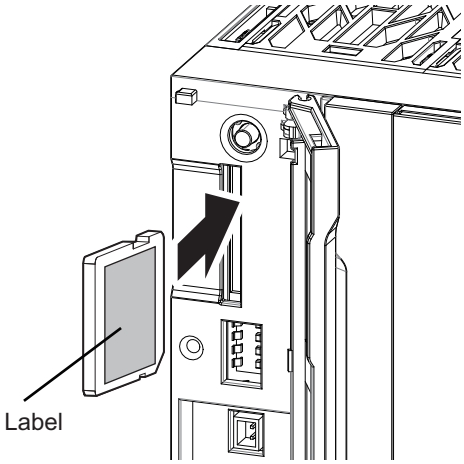

3 Push the SD Memory Card securely into the compartment.

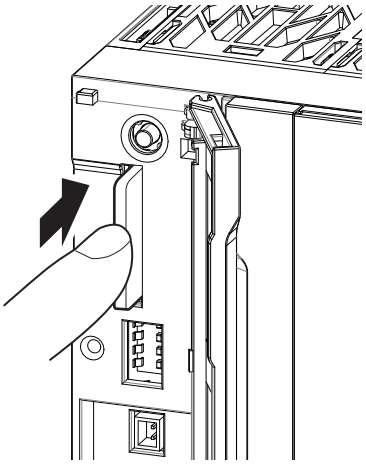

4 Close the Memory Card cover.

Removing the SD Memory Card

1 Press the SD Memory Card power supply switch.

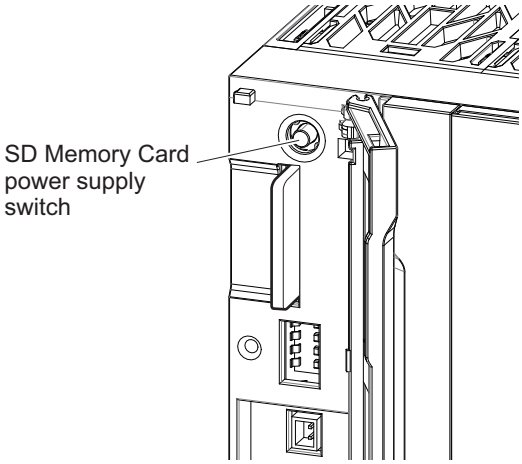

2 Press the SD Memory Card after you confirm that the SD BUSY indicator (lit while SD Memory Card access is in progress) and SD PWR indicator (lit while SD Memory Card power is supplied) are no longer lit.

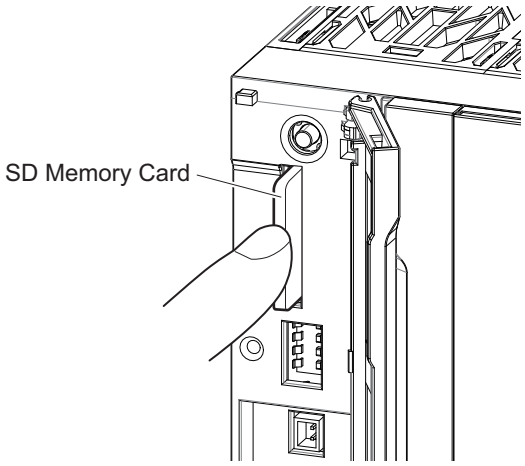

The SD Memory Card will be ejected from the compartment.

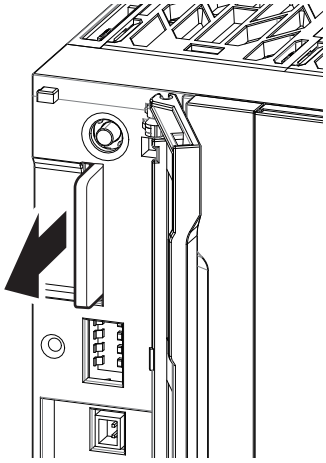

3 Pull out the SD Memory Card.

4 Close the Memory Card cover.

5-3-10 Battery Installation

Battery to Use

Use the Battery CJ1W-BAT01 which is sold separately.

Precautions for Correct Use

Be sure to install a Battery within two years of the production date shown on the Battery label.

Production Date

OMRON
CJ1W-BAT01
18-03

Manufactured in March 2018.

Battery Installation Procedure

Use the following procedure to install the Battery.

Precautions for Safe Use

We recommend mounting or replacing the Battery with the power turned OFF to prevent the CPU Unit's sensitive internal components from being damaged by static electricity and to prevent malfunctions. The Battery can be mounted or replaced without turning OFF the power supply. To do so, always touch a grounded piece of metal to discharge static electricity from your body before you start the procedure.
If the Low Battery Voltage error occurs after you mount the Battery, connect the Sysmac Studio and clear the error.

Additional Information

UL standards require that batteries be replaced by experienced technicians. Always place an experienced technician in charge of battery replacement.

1 Turn OFF the power supply to the Controller.
If the CPU Unit has not been ON, turn it ON for at least five minutes and then turn it OFF.

2 Place your finger on the memory card cover located in the left side of the CPU Unit and open it to the right.

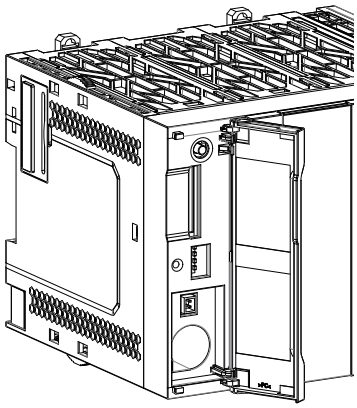

3 Connect the connector of the battery to the battery connector and insert the battery in the battery slot.

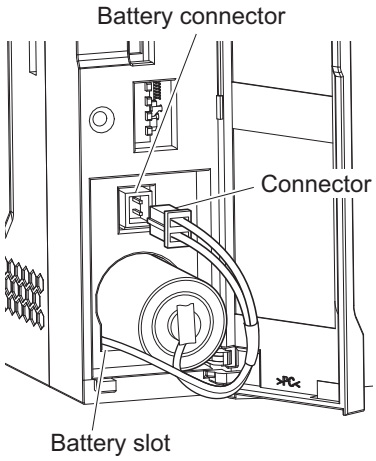

4 Press in the battery harness by twisting and close the memory card cover.

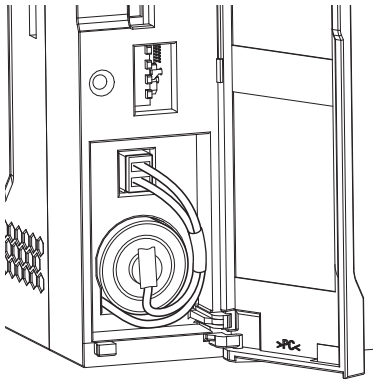

5 Set the **Battery-related error detection** to **Use** and adjust the CPU Unit's clock data to the current time.
Refer to the *Sysmac Studio Version 1 Operation Manual (Cat. No. W504)* for how to make the setting.

Precautions for Safe Use

- The Battery may leak, rupture, heat, or ignite. Never short-circuit, charge, disassemble, heat, or incinerate the Battery or subject it to strong shock.
- Dispose of any Battery that has been dropped on the floor or otherwise subjected to excessive shock. Batteries that have been subjected to shock may leak if they are used.

5-3-11 Removing CPU Unit

This section describes how to remove the CPU Unit.
If an NX Unit is mounted, remove the CPU Unit after removing the NX Unit next to the CPU Unit. Refer to *5-3-12 Removing NX Units* on page 5-30 for details on how to remove the NX Units.
If an X Bus Unit is mounted, remove the X Bus Unit or slide it to the left. Refer to *5-3-13 Removing X Bus Units* on page 5-31 for details on how to remove the X Bus Units.

Precautions for Correct Use

When you remove a Unit, be careful not to touch or bump the pins in the NX bus connector.

1 Unlock the DIN Track mounting hook.
Use a flat-blade screwdriver to pull up the DIN Track mounting hook to unlocked position.
At this point, be sure not to drop the CPU Unit.

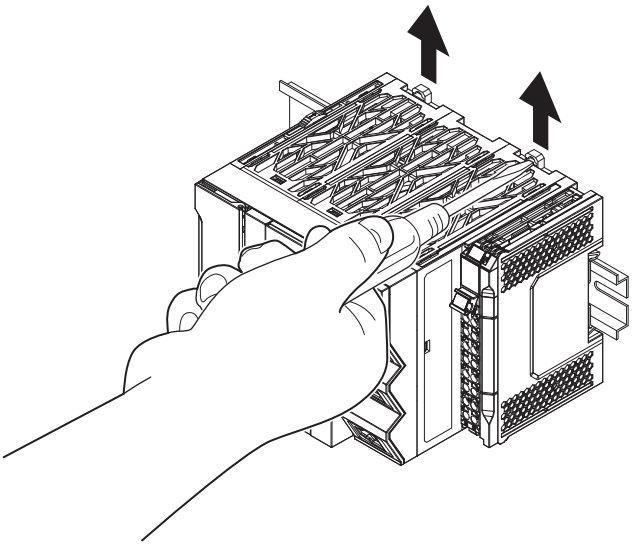

2 Remove the CPU Unit from the DIN Track.
Tilt the Unit diagonally upwards and pull it up slightly, then pull it out to remove. Be careful not to drop it.

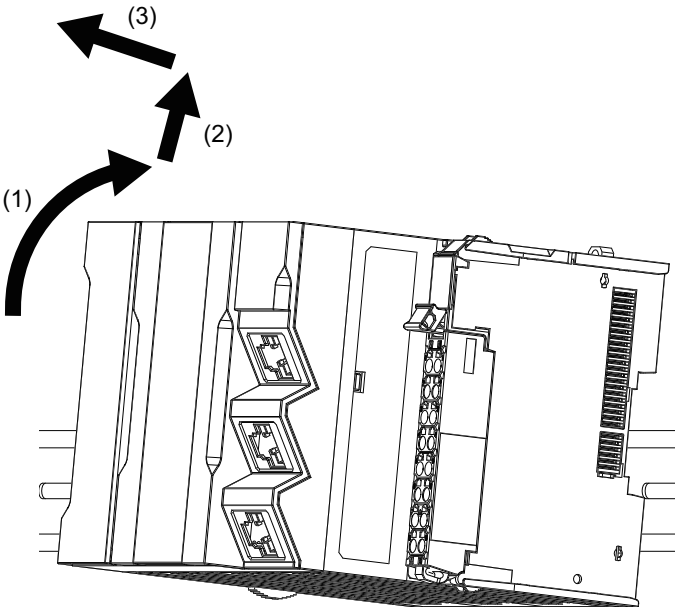

5-3-12 Removing NX Units

Precautions for Safe Use

Always turn OFF the Unit power supply and I/O power supply before you remove the NX Unit.

1 Use a flat-blade screwdriver to pull up the DIN Track mounting hook on the Unit to remove.

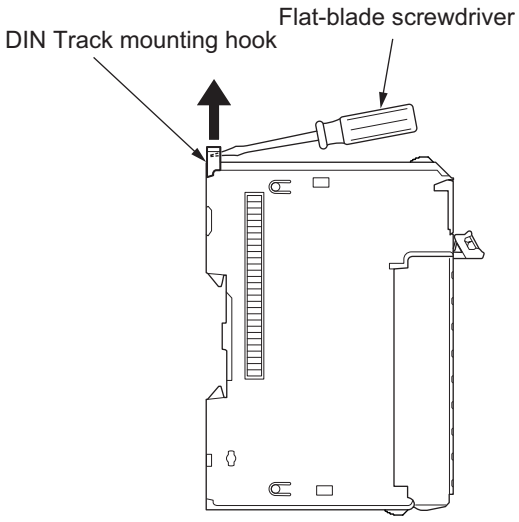

2 Put your fingers on the protrusions for removing multiple NX Units including the Unit to be removed, then pull out straight forward to remove.

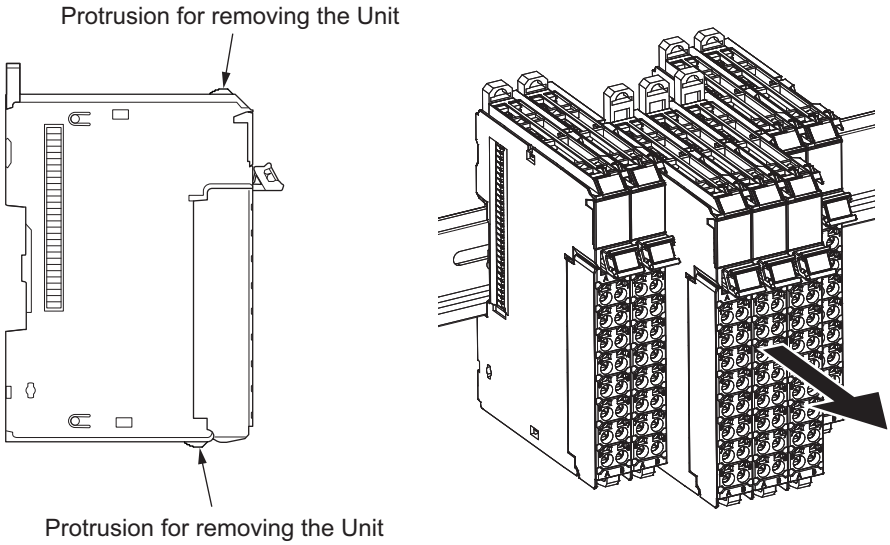

Precautions for Correct Use

- When removing an NX Unit, remove multiple Units together which include the one you want to remove. If you attempt to remove only one Unit, it is stuck and hard to pull out.
- Do not unlock the DIN Track mounting hooks on all of the NX Units at the same time. If you unlock the DIN Track mounting hooks on all of the NX Units at the same time, all of the Units may come off.
- When you remove a Unit, be careful not to touch or bump the pins in the NX bus connector.

5-3-13 Removing X Bus Units

Precautions for Safe Use

Always turn OFF the power supply before you remove the X Bus Unit.

1 Slide the DIN Track mounting hooks and the upper and lower sliders of the Unit to unlock them.

2 Slide the Unit to the left on the DIN Track to remove it.

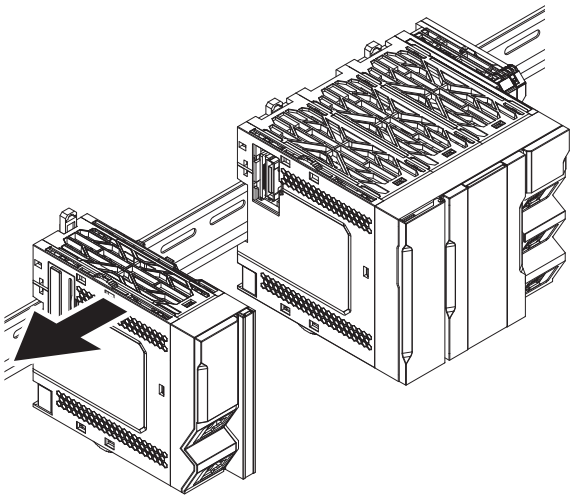

3 Remove the Unit from the DIN Track.
Tilt the Unit diagonally upwards and pull it up slightly, then pull it out to remove. Be careful not to drop it.

5-3-14 Assembled Appearance and Dimensions

Installation Dimensions

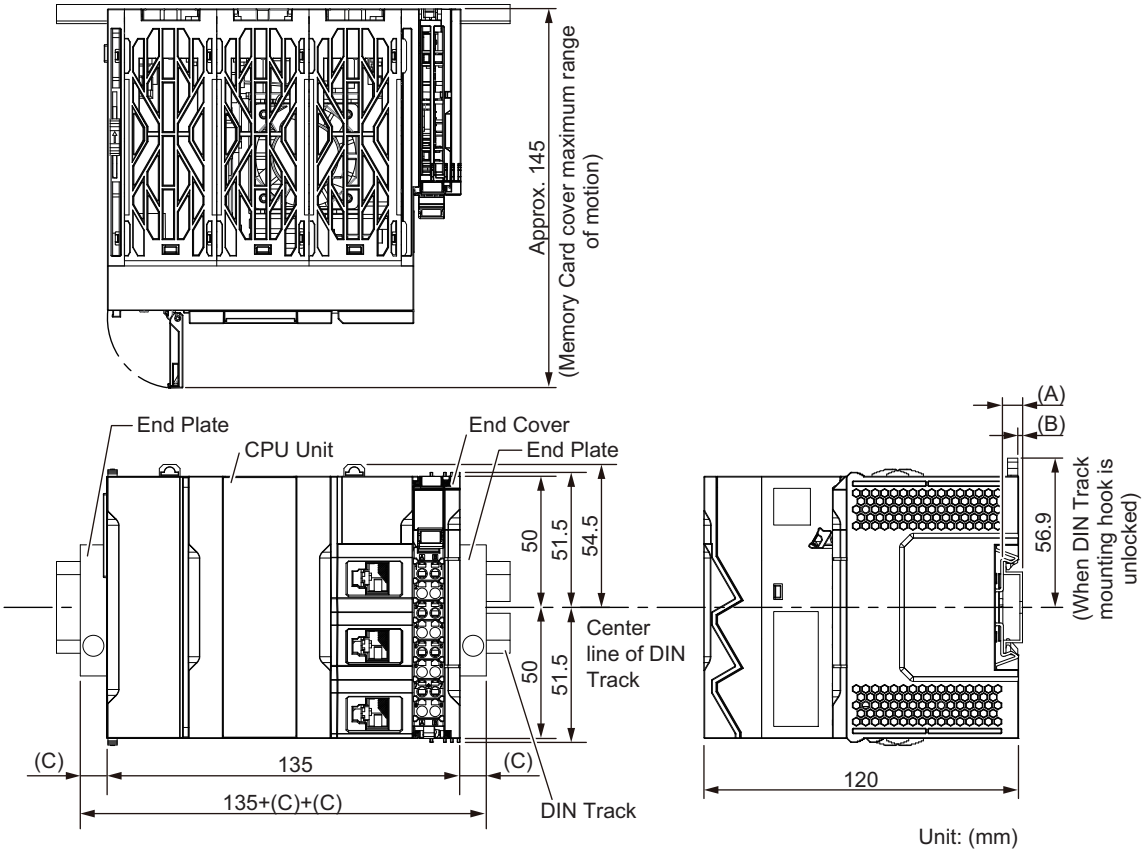

W: Width of CPU Unit (including the End Cover)

- Unit width

Model	Unit width [mm]
NX502-□□□□	135

- DIN Track dimension

DIN Track model	(A) DIN Track dimension	(B) Dimension from the back of the Unit to the back of the DIN Track
PFP-100N	7.3 mm	1.5 mm
PFP-50N	7.3 mm	1.5 mm
NS 35/7,5 PERF	7.5 mm	1.7 mm
NS 35/15 PERF	15 mm	9.2 mm

- End Plate dimension

End Plate model	(C) End Plate dimension
PFP-M	10 mm
CLIPFIX 35	9.5 mm

● Calculation Example of CPU Rack Configuration Width

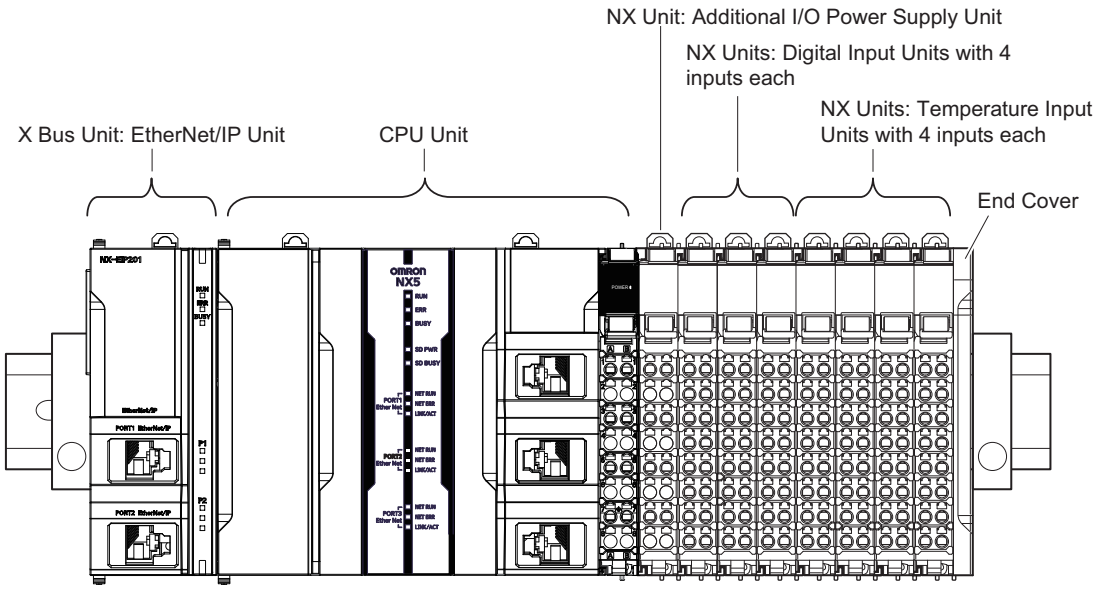

The widths of the Units in the example CPU Rack configuration and the total configuration width are given below.

Unit name	Model	Unit width	Qty	Subtotal unit width
CPU Unit	NX502-1500	135 mm*1	1	135 mm*1
X Bus Unit: EtherNet/IP Unit	NX-EIP201	39 mm	1	39 mm
Additional I/O Power Supply Unit	NX-PF0630	12 mm	1	12 mm
NX Units: Digital Input Units	NX-ID3317	12 mm	3	36 mm

Unit name	Model	Unit width	Qty	Subtotal unit width
NX Units: Temperature Input Units	NX-TS3101	24 mm	2	48 mm
Total (W=)				270 mm

*1. It includes End Cover (6 mm) dimension.

Additional Information

You can check the width of the CPU Rack when you create the Unit configuration on the CPU and Expansion Racks Tab Page on the Sysmac Studio. On the CPU and Expansion Racks Tab Page on the Sysmac Studio, click on the right end of the CPU Rack to display the width.
However, since CPU Rack is displayed on the Sysmac Studio separately as **CPU Rack: X Bus** and **CPU Rack: NX Bus**, it is not possible to display both the X Bus Unit and the NX Bus Unit. Also, the dimension without the End Cover (6 mm) is displayed for the CPU Unit on the X Bus Unit side.

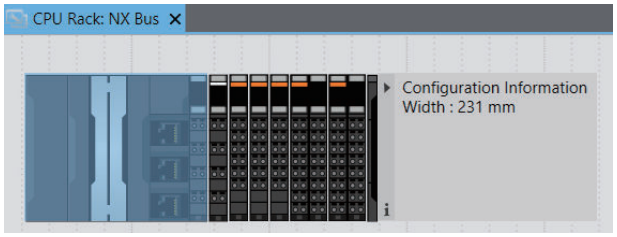

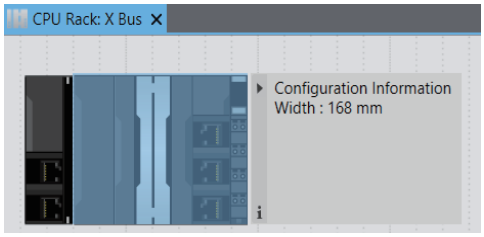

Installation Height

The installation height of the CPU Rack depends on the model of DIN Track and on the models of NX Units that are mounted.
Also, additional space is required for the cables that are connected to the Unit. Allow sufficient depth in the control panel and allow extra space when you mount the CPU Rack.

The following figure shows the dimensions from the cables connected to the CPU Rack to the back of the Unit. The unit of dimension is millimeter.
The height from the mounting surface of the DIN Track varies depending on the DIN Track to be used. Refer to *Installation Dimensions* on page 5-32 for the height of individual DIN Track type.

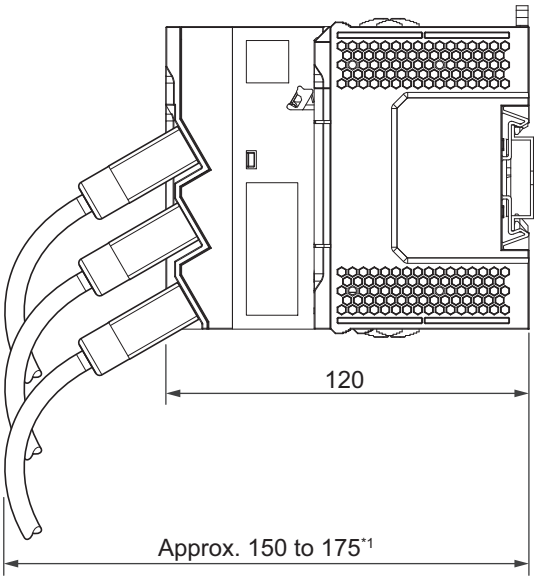

Unit: (mm)

*1. This is the dimension from the back of the Unit to the communications cables.
Approx. 150 mm: When MPS588-C connector is used
Approx. 175 mm: When XS6G-T421-1 connector is used

Precautions for Safe Use

Do not pull on the cables or bend the cables beyond their natural limit.
Doing so may break the cables.

5-4 Wiring

⚠ WARNING

- Make sure that the voltages and currents that are input to the slaves and Units are within the specified ranges.
  Inputting voltages or currents that are outside of the specified ranges may cause accidents or fire.

⚠ CAUTION

- Be sure that all terminal screws and cable connector screws are tightened to the torque specified in the relevant manuals. Loose screws may result in fire or malfunction.
- Do not touch any Unit when power is being supplied or immediately after the power supply is turned OFF. Doing so may result in burn injury.

Precautions for Safe Use

Use the methods that are specified in this manual for wiring the terminal blocks.

Precautions for Correct Use

Do not allow wire clippings, shavings, or other foreign material to enter any Unit. Otherwise, Unit burning, failure, or malfunction may occur. Cover the Units or take other suitable countermeasures, especially during wiring work.

5-4-1 Wiring the Unit Power Supply

This section describes the wiring of the Unit power supply to the Unit power supply terminals on the CPU Unit.

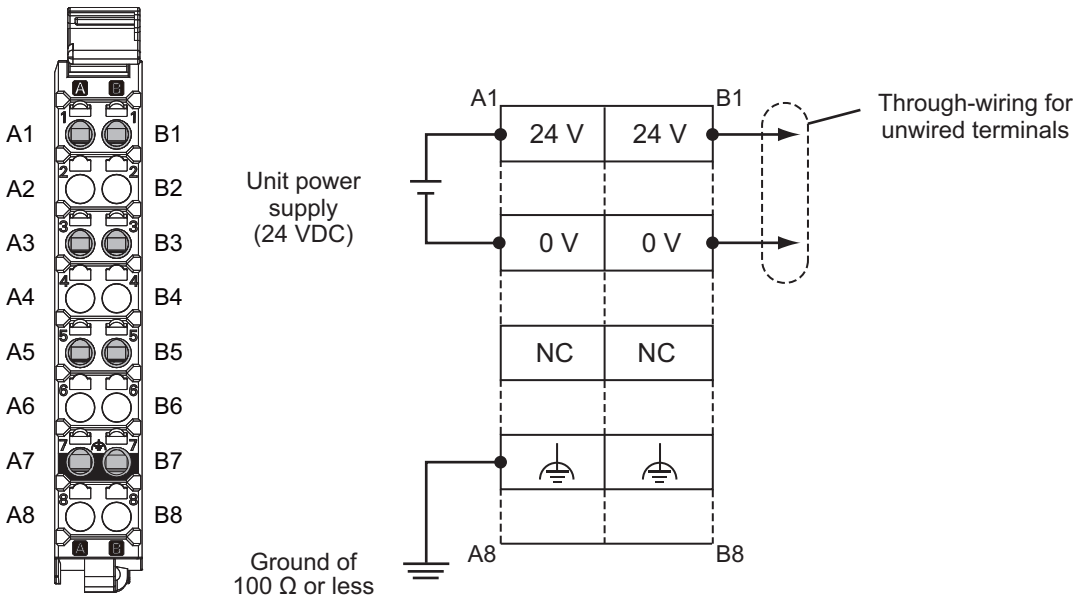

Connect the DC power supply to the Unit power supply terminals.

Terminal number indication	Terminal name	Description
A1, B1	24 V	Connect the + terminal (24 VDC) of the Unit power supply to A1 or B1.
A3, B3	0 V	Connect the - terminal (0 VDC) of the Unit power supply to A3 or B3.

The 24-V terminals and 0-V terminals are internally connected to each other.
You can use the unwired terminals for through-wiring to an Additional NX Unit Power Supply Unit or to the Unit power supply terminals on another NX502 CPU Unit.
When you supply the Unit power through the unwired terminals, be careful not to exceed 4 A, the current capacity of power supply terminals.

5-4-2 Wiring the Additional NX Unit Power Supply Unit

For information on wiring the Additional NX Unit Power Supply Unit, refer to the *NX-series System Units User's Manual* (Cat. No. W523-E1-05 or later).

5-4-3 Wiring the Additional I/O Power Supply Unit

For information on wiring the Additional I/O Power Supply Unit, refer to the *NX-series System Units User's Manual* (Cat. No. W523-E1-05 or later).

5-4-4 Wiring the Protective Devices

For information on wiring the protective devices to protect against short circuits and overcurrents of external circuits, refer to *4-4-3 Selecting Protective Devices* on page 4-25.

5-4-5 Grounding

This section describes how to ground the CPU Rack.

⚠ CAUTION

When you connect a computer or other peripheral device to a Controller that has a non-isolated DC power supply, either ground the 0-V side of the external power supply for the Unit power supply or do not ground it at all.
If the peripheral devices are grounded incorrectly, the external power supply for the Unit power supply may be short-circuited. Never ground the 24-V side of the power supply, as shown in the following figure.

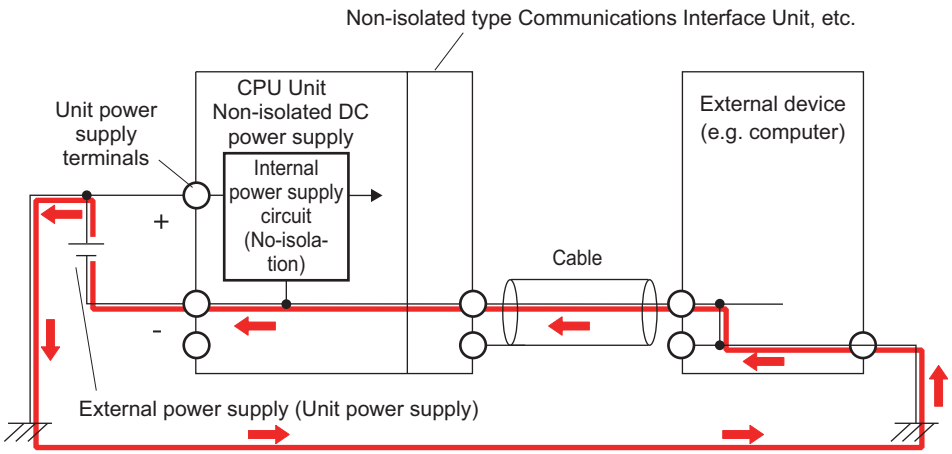

Units with Ground Terminals and Type of Ground Terminals

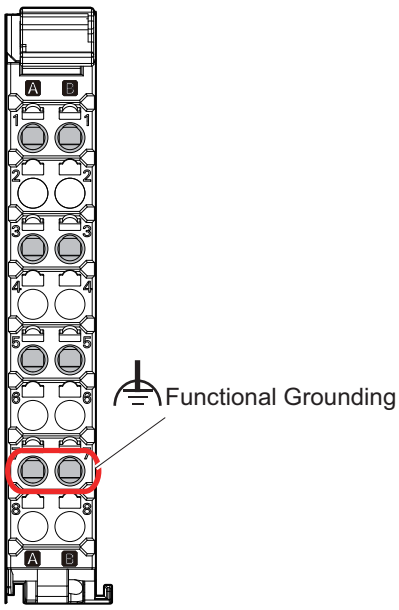

CPU Unit,
NX Unit

● Units with Ground Terminals

- CPU Unit
- Additional NX Unit Power Supply Unit
- Shield Connection Unit

Grounding type	Symbol	Function
A7, B7		Functional grounding is done to protect device and system functions, including prevention of noise from external sources, or prevention of noise from devices or equipment that could have harmful effects on other devices or equipment.

DIN Track Contact Plates

A Unit that has a ground terminal also has a DIN Track contact plate on the back of the Unit.
The DIN Track contact plate is connected internally to the ground terminal on the Unit.
This means that the ground terminal will be electrically connected to the DIN Track.

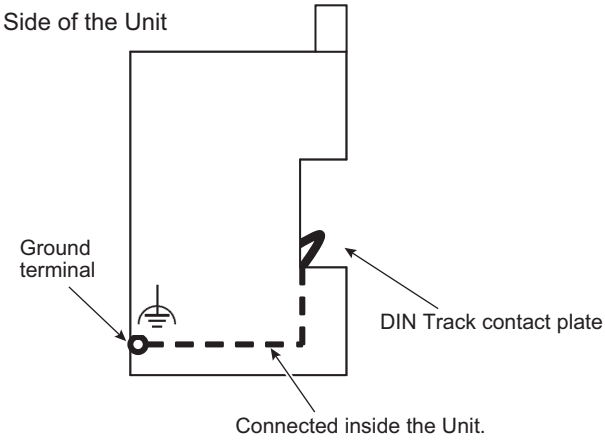

Grounding the CPU Rack

This section describes how to ground the ground terminals on the CPU Rack.
The functional ground terminals that are provided on some Units and the DIN Track are grounded.

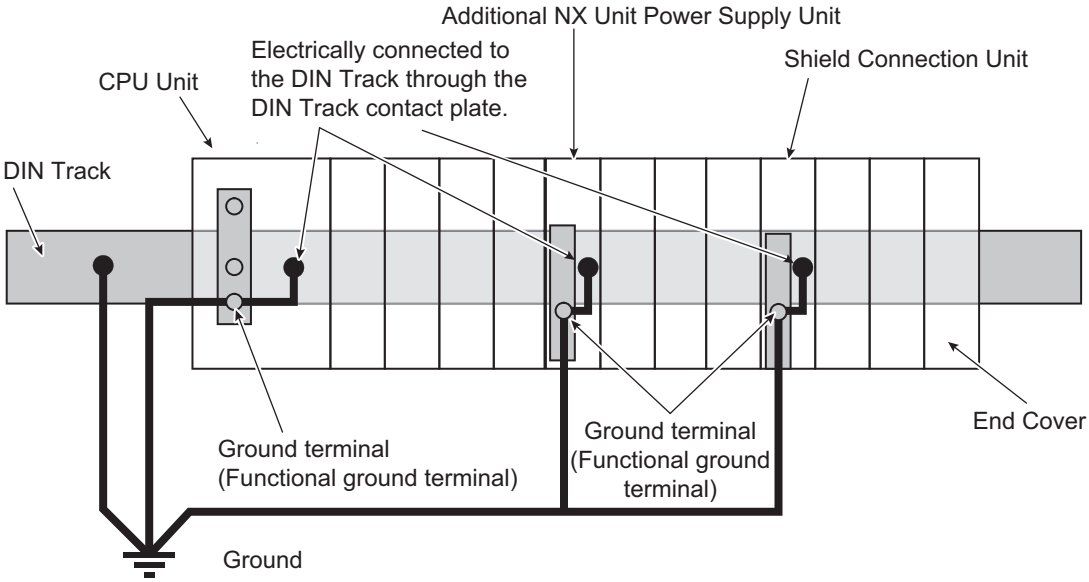

- Using a dedicated ground wire, ground the ground terminals and DIN Track with a ground resistance of 100 Ω or less.
- The ground wire should not be more than 20 m long.

- Use a ground wire that is 2.0 mm^2 or larger. Refer to *5-4-8 Wiring to the CPU Unit Terminal Block* on page 5-42 for information on ground wires that are applicable to the functional ground terminal on the CPU Unit.
  For information on ground wires that are applicable to the functional ground terminals on the Additional NX Unit Power Supply Unit or Shield Connection Unit, refer to the *NX-series System Units User's Manual (Cat. No. W523)*.

If the DIN Track is made of steel and the surface is not treated to produce an insulating material, you can omit grounding the functional ground terminal on any Unit that has one, as shown in the following figures.

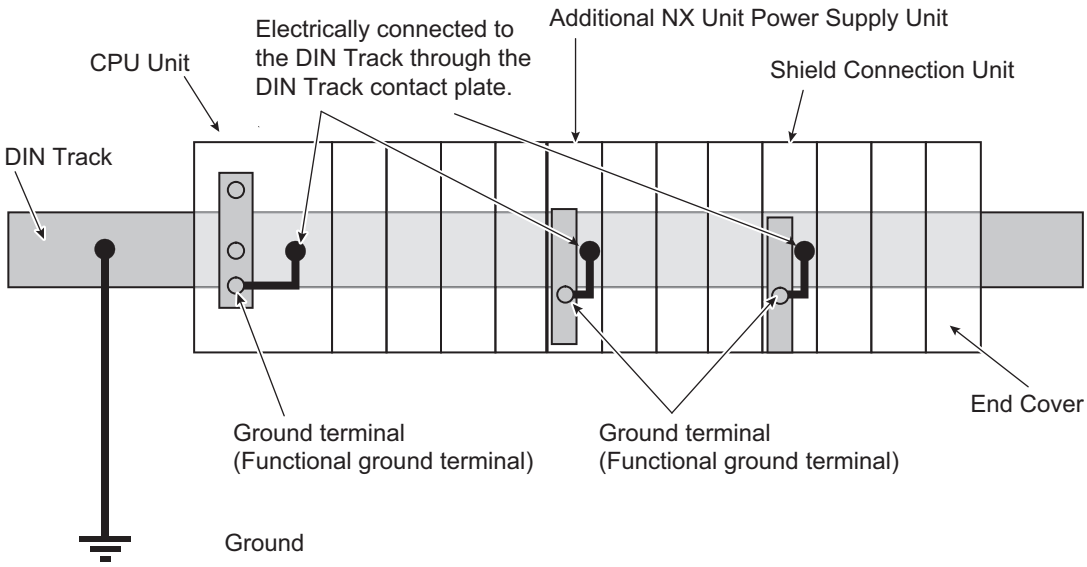

If the surface of the DIN Track is treated to produce an insulating material (e.g., anodized aluminum), the DIN Track contact plate will not be electrically connected to the DIN Track even if they are in physical contact.

Grounding the DIN Track

Attach a crimped terminal to the ground wire and then connect it to mounting hole on the DIN Track with a screw to ground the DIN Track.

Grounding the CPU Rack with Peripheral Devices and in Control Panels

Refer to *5-5-6 Grounding* on page 5-64 for the grounding procedures for the CPU Rack with peripheral devices and in control panels.

Isolating the CPU Rack from the Control Panel

If the ground wire for a Unit with a ground terminal is shared with power equipment, noise will adversely affect the Units.
You can use OMRON NX-AUX01 DIN Track Insulation Spacers with PFP-50N or PFP-100N DIN Tracks to isolate the CPU Rack from the control panel.

● Installing DIN Track Insulation Spacers and DIN Track

Secure the DIN Track Insulation Spacers to the control panel with screws, and then secure the DIN Track to the DIN Track Insulation Spacers. The recommended tightening torque for M4 screws is 1.2 N·m.

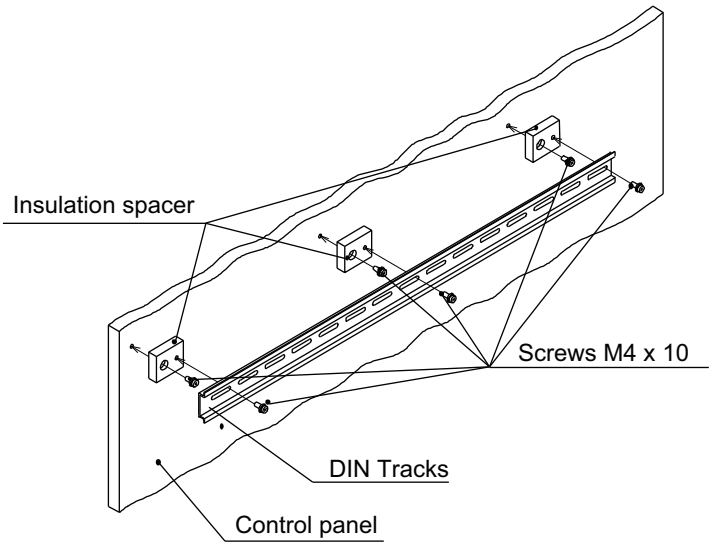

- DIN Track Insulation Spacers
  NX-AUX01 (OMRON Corporation)
  Three Spacers are included in one model.

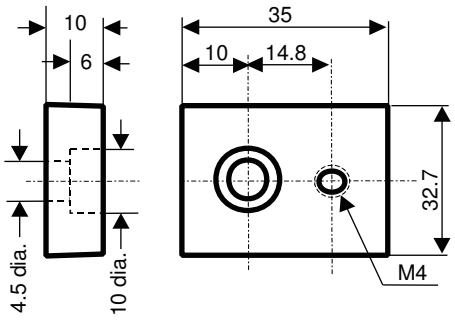

Precautions for Correct Use

If you use DIN Track Insulation Spacers to install a CPU Rack, the height will be increased by approximately 10 mm. Make sure that the CPU Rack and connecting cables do not come into contact with other devices.

5-4-6 Wiring the Built-in EtherCAT Port

For information on wiring the built-in EtherCAT port, refer to the *NJ/NX-series CPU Unit Built-in EtherCAT Port User's Manual (Cat. No. W505)*.

5-4-7 Wiring the Built-in EtherNet/IP Port

For information on wiring the built-in EtherNet/IP port, refer to the *NJ/NX-series CPU Unit Built-in EtherNet/IP Port User's Manual (Cat. No. W506)*.

5-4-8 Wiring to the CPU Unit Terminal Block

This section describes how to connect wires to the screwless clamping terminal block on the CPU Unit, the installation and removing methods, and functions for preventing incorrect attachment.

You can connect ferrules that are attached to the twisted wires to the screwless clamping terminal block. You can also connect the twisted wires or the solid wires to the screwless clamping terminal block. If you connect the ferrules, all you need to do to connect the wires is to insert the ferrules into the terminal holes.

⚠ WARNING

Make sure that the voltages and currents that are input to the slaves and Units are within the specified ranges.
Inputting voltages or currents that are outside of the specified ranges may cause accidents or fire.

Precautions for Safe Use

Use the correct wiring parts and tools when you wire the system. Otherwise, cables may be disconnected to cause short-circuit or wire breakage.

Applicable Wires

The wires that you can connect to the screwless clamping terminal block are twisted wires, solid wires, and ferrules that are attached to the twisted wires. The following section describes the dimensions and processed methods for applicable wires.

● Dimensions of Wires Connected to the Terminal Block

The dimensions of wires that you can connect into the terminal holes of the screwless clamping terminal block are as in the figure below.
Process the applicable wires that are specified in the following description to apply the dimensions.

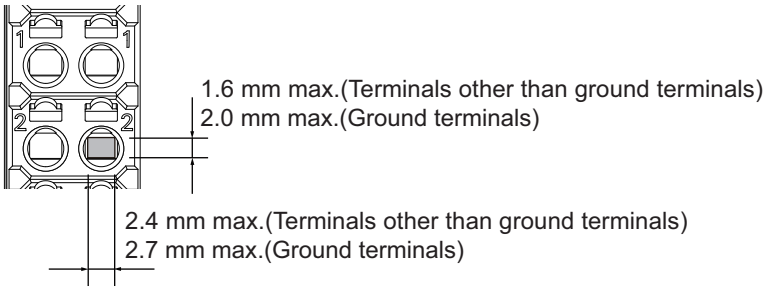

● Using Ferrules

If you use ferrules, attach the twisted wires to them.
Observe the application instructions for your ferrules for the wire stripping length when attaching ferrules.
Always use plated one-pin ferrules. Do not use unplated ferrules or two-pin ferrules.

The applicable ferrules, wires, and crimping tools are listed in the following table.

Terminal types	Manufacturer	Ferrule model*1	Applicable wire (mm^2 (AWG))	Crimping tool
All terminals except ground terminals	Phoenix Contact	AI0,34-8	0.34 (#22)	Phoenix Contact (Applicable wire size given in parentheses) CRIMPFOX 6 (0.25 to 6 mm^2, AWG24 to 10)
		AI0,5-8	0.5 (#20)	
		AI0,5-10		
		AI0,75-8	0.75 (#18)	
		AI0,75-10		
		AI1,0-8	1.0 (#18)	
		AI1,0-10		
		AI1,5-8	1.5 (#16)	
		AI1,5-10		
Ground terminals		AI2,5-10	2.0*2	
All terminals except ground terminals	Weidmuller	H0.14/12	0.14 (#26)	Weidmuller (Applicable wire size given in parentheses) PZ6 Roto (0.14 to 6 mm^2, AWG26 to 10)
		H0.25/12	0.25 (#24)	
		H0.34/12	0.34 (#22)	
		H0.5/14	0.5 (#20)	
		H0.5/16		
		H0.75/14	0.75 (#18)	
		H0.75/16		
		H1.0/14	1.0 (#18)	
		H1.0/16		
		H1.5/14	1.5 (#16)	
		H1.5/16		

*1. This represents a typical model. Actually, colored codes and other information is added.

*2. Although wires exceeding 2.0 mm^2 are available for AWG14, they cannot be used for the screwless clamping terminal block.

When you use any ferrules other than those in the above table, crimp them to the twisted wires so that the following processed dimensions are achieved.

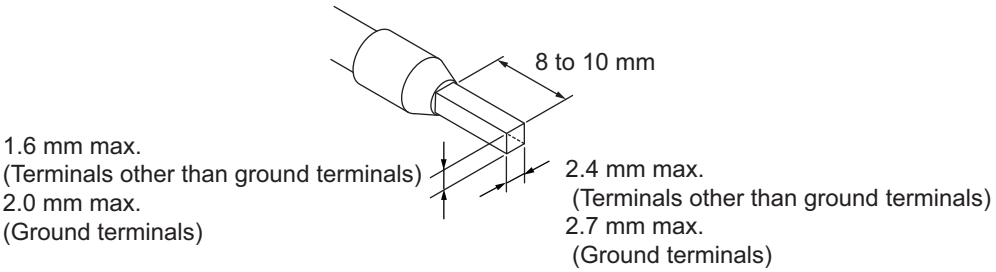

● Using Twisted or Solid Wires

If you use twisted wires or solid wires, use the following table to determine the correct wire specifications.

Terminals		Wire type				Wire size	Conductor length (stripping length)
		Twisted wires		Solid wire			
Classification	Current capacity	Plated	Unplated	Plated	Unplated		
All terminals except ground terminals	2 A max.	Possible	Possible	Possible	Possible	0.08 to 1.5 mm^2 (AWG 28 to 16)	8 to 10 mm
	Greater than 2 A and 4 A or less		Not possible	Possible *1	Not possible		
Ground terminals	---	Possible	Possible	Possible	Possible	2.0 mm^2	10 to 12 mm

*1. Secure wires to the screwless clamping terminal block. Refer to *Securing Wires* on page 5-47 for how to secure wires.

Precautions for Correct Use

- Use cables with suitable wire sizes for the carrying current. There are also restrictions on the current due to the ambient temperature. Refer to the manuals for the cables and use the cables correctly for the operating environment.
- For twisted wires, strip the sheath and twist the conductor portion. Do not unravel or bend the conductor portion of twisted wires or solid wires.

NG

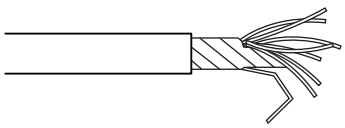

Unravel wires

NG

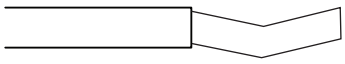

Bend wires

Additional Information

If more than 2 A will flow on the wires, use plated wires or use ferrules.

Connecting/Removing Wires

This section describes how to connect and remove wires.

Terminal Block Parts and Names

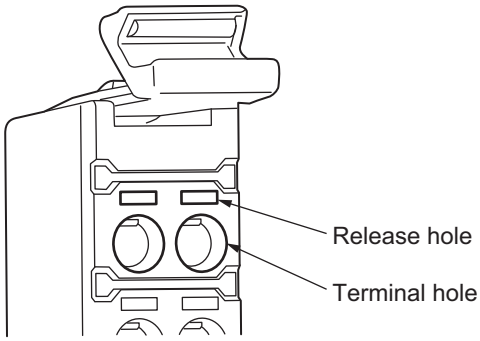

Required Tools

Use a flat-blade screwdriver to connect and remove wires.
Use the following flat-blade screwdriver.

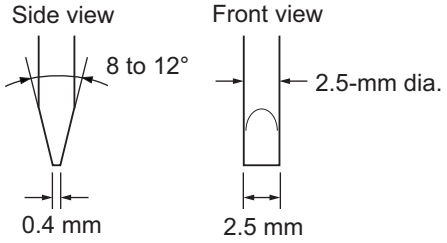

Recommended screwdriver model

Model	Manufacturer
XW4Z-00B*1	OMRON Corporation
SZF 0-0,4×2,5	Phoenix Contact

*1. The minimum standard number of package is 10 pcs.

Connecting Ferrules

Insert the ferrule straight into the terminal hole.
It is not necessary to press a flat-blade screwdriver into the release hole.

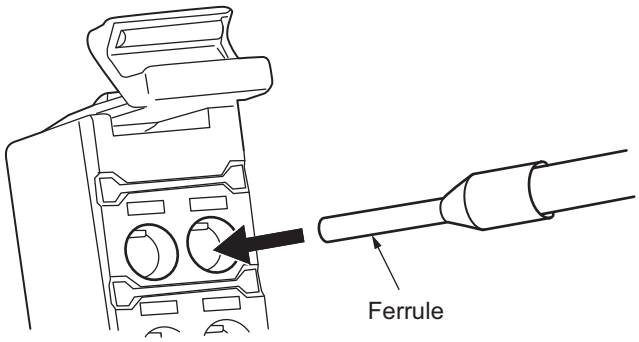

After you make a connection, make sure that the ferrule is securely connected to the terminal block.

Connecting Twisted Wires/Solid Wires

Use the following procedure to connect the twisted wires or solid wires to the terminal block.

1 Press a flat-blade screwdriver at an angle into the release hole.
The appropriate angle of the screwdriver is 10 to 15° to the horizontal.
If you press in the screwdriver correctly, you will feel the springback in the release hole.

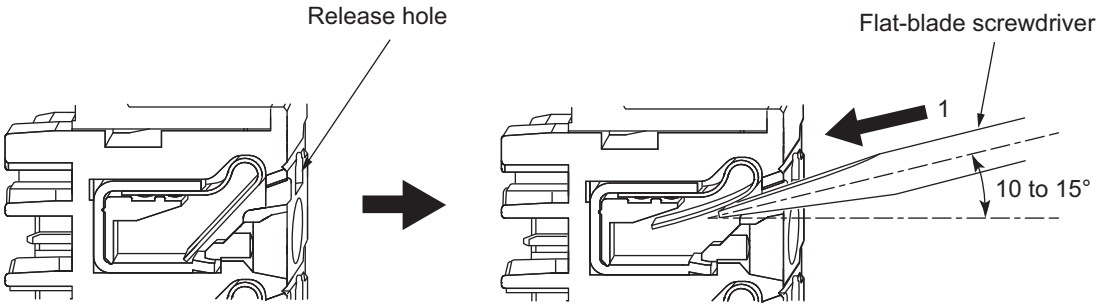

2 Leave the flat-blade screwdriver pressed into the release hole and insert the twisted wire or the solid wire into the terminal hole.
Insert the twisted wire or the solid wire until the stripped portion is no longer visible in the terminal hole to prevent shorting.

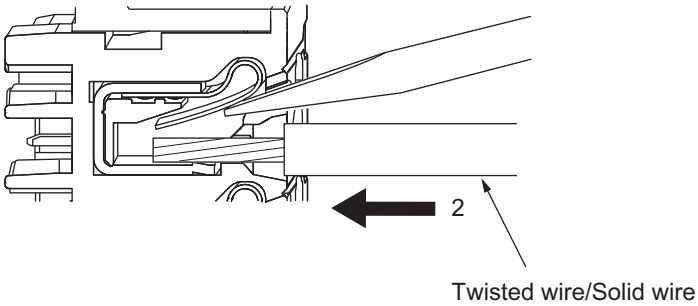

3 Remove the flat-blade screwdriver from the release hole.

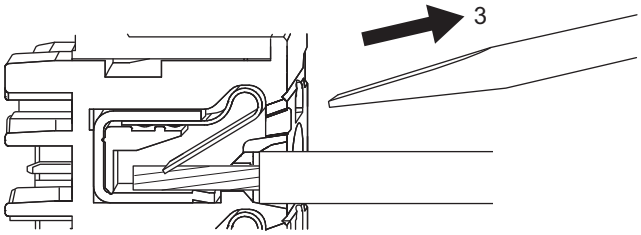

After you make a connection, lightly pull the twisted wire or the solid wire to make sure that the wire is securely connected to the terminal block.

Precautions for Safe Use

- Do not press a flat-blade screwdriver straight into the release hole on a screwless clamping terminal block. Doing so may break the terminal block.

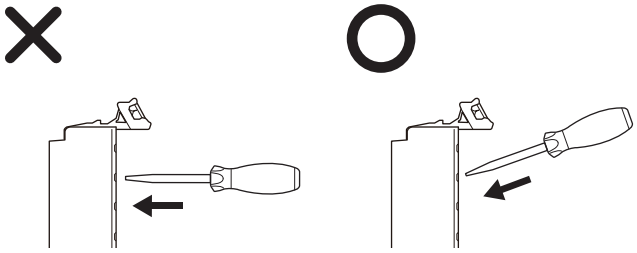

- When you insert a flat-blade screwdriver into a release hole on a screwless clamping terminal block, press it down with a force of 30N or less. Applying excessive force may damage the terminal block.
- Do not incline or twist the flat-blade screwdriver while it is in a release hole on a screwless clamping terminal block. Doing so may break the terminal block.

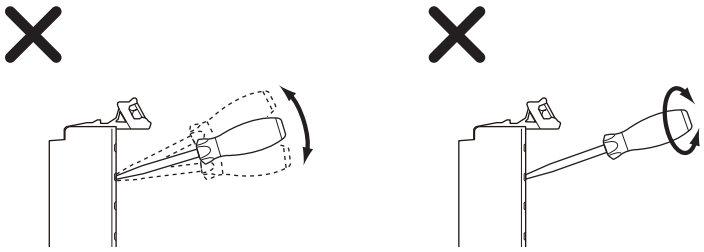

- Follow the instructions in this manual to correctly perform wiring.
- Do not pull on the cables or bend the cables beyond their natural limit.
  Doing so may break the cables.

Securing Wires

It is necessary to secure wires to the screwless clamping terminal block depending on the wire types that are used or the current flows on the wires.
The following table gives the necessity for securing wires.

Terminals		Wire type				
		Ferrule	Twisted wires		Solid wire	
Classification	Current capacity		Plated	Unplated	Plated	Unplated
All terminals except ground terminals	2 A max.	No	No	No	No	No
	Greater than 2 A and 4 A or less			Not possi-ble	Yes	Not possible
Ground terminals	---		No	No	No	No

Use the following procedure to secure the wires.

1 Prepare a cable tie.
A cable tie can be used with a width of 4 mm or less and a thickness of 1.5 mm or less.
Select a cable tie correctly for the operating environment.

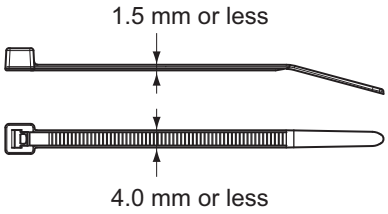

2 Pass a cable tie through the holes for securing wires on the upper and lower sides of the screwless clamping terminal block.

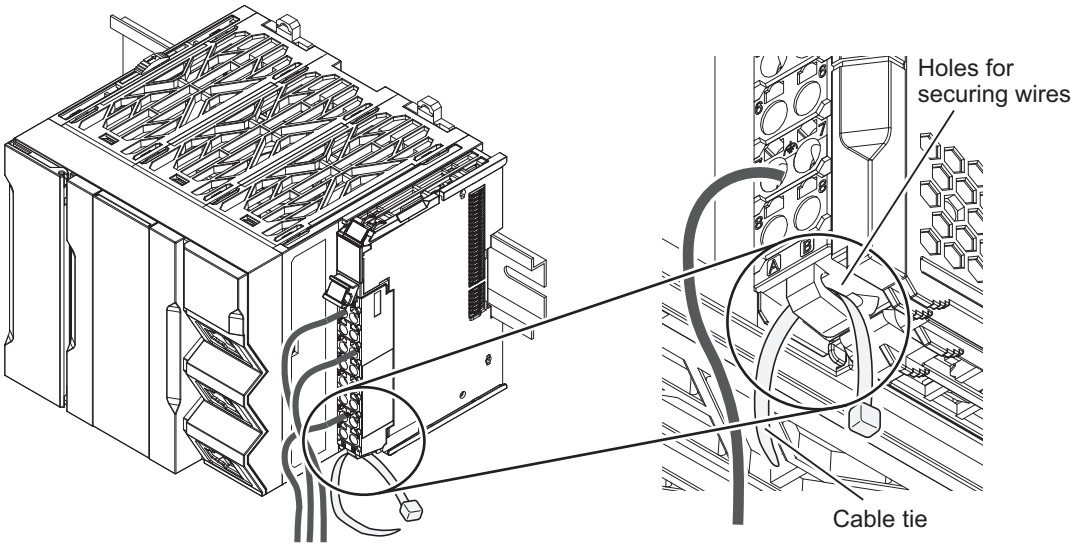

3 Bundle wires with a cable tie and secure them to the screwless clamping terminal block.

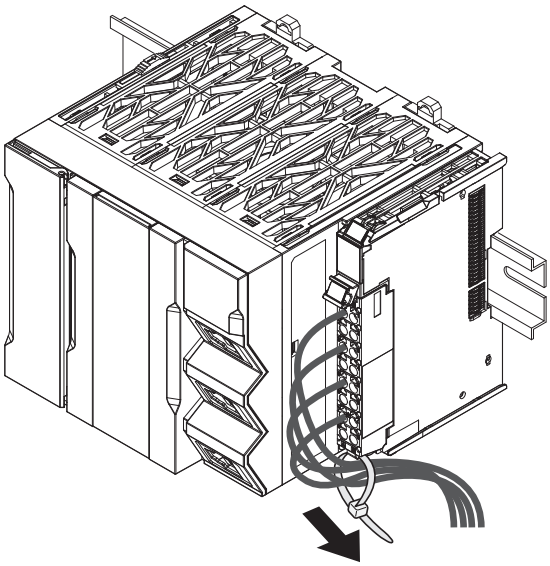

In such a case, secure wires within the range of 30 mm from the screwless clamping terminal block. Also, leave spaces below the CPU Rack to ensure ventilation, as shown in the following figure.

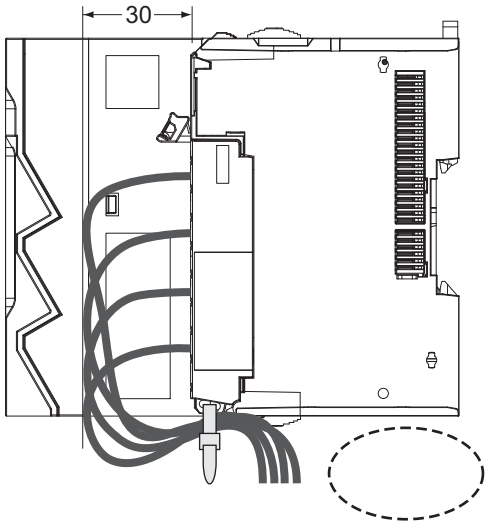

Space to ensure ventilation

● Removing Wires

Use the following procedure to remove the wires from the terminal block.
The removal method is the same for ferrules, twisted wires, and solid wires.

If wires are secured firmly to the terminal block, release them first.

1 Press a flat-blade screwdriver at an angle into the release hole.
The appropriate angle of the screwdriver is 10 to 15° to the horizontal.
If you press in the screwdriver correctly, you will feel the springback in the release hole.

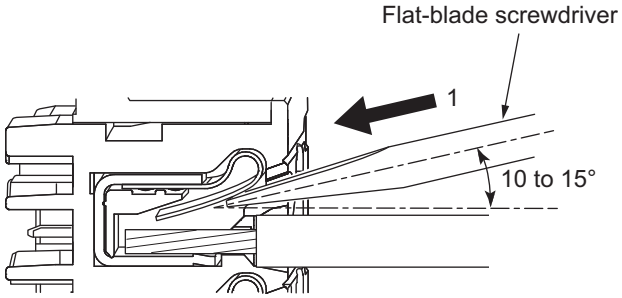

2 Leave the flat-blade screwdriver pressed into the release hole and pull out the wire.

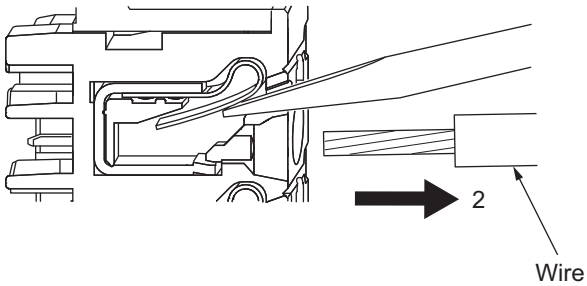

3 Remove the flat-blade screwdriver from the release hole.

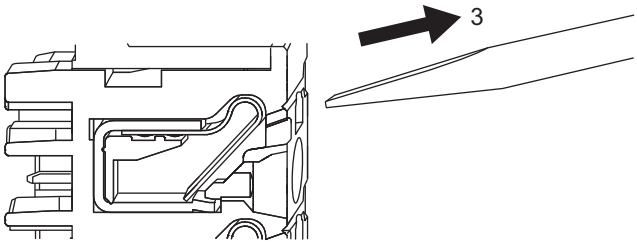

Precautions for Safe Use

- Do not press a flat-blade screwdriver straight into the release hole on a screwless clamping terminal block. Doing so may break the terminal block.

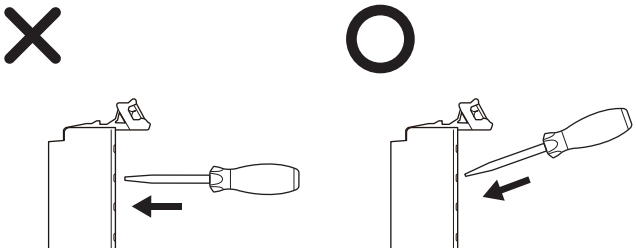

- When you insert a flat-blade screwdriver into a release hole on a screwless clamping terminal block, press it down with a force of 30N or less. Applying excessive force may damage the terminal block.
- Do not incline or twist the flat-blade screwdriver while it is in a release hole on a screwless clamping terminal block. Doing so may break the terminal block.

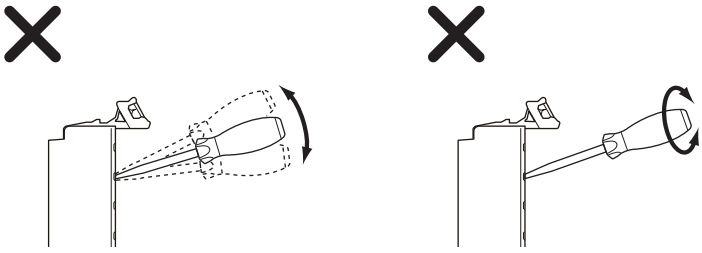

- Follow the instructions in this manual to correctly perform wiring.
- Do not pull on the cables or bend the cables beyond their natural limit.
  Doing so may break the cables.

Additional Information

Procedure to Remove Tight Ferules

Use the following procedure to remove tight ferrules.

1. Press a flat-blade screwdriver at an angle into the release hole.
   The appropriate angle of the screwdriver is 10 to 15° to the horizontal.
   The tip of the flat-blade screwdriver contacts the ferrule if you press the driver too deep, and this makes the ferrule difficult to be pulled out. Press the flat-blade screwdriver lightly and stop there when you feel some resistance.

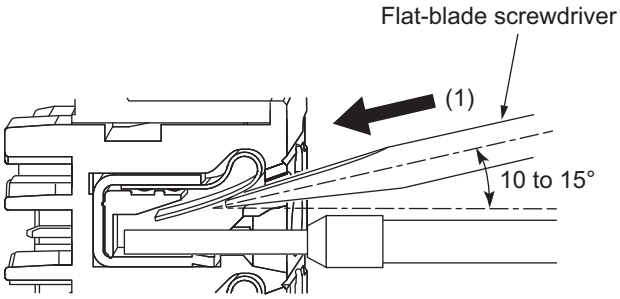

2. Leave the flat-blade screwdriver pressed into the release hole and tilt the flat-blade screwdriver approximately 5° to the direction of the ferrule.
   The position of spring in the release hole changes by the tilted flat-blade screwdriver, and this creates a gap between the ferrule and the spring.

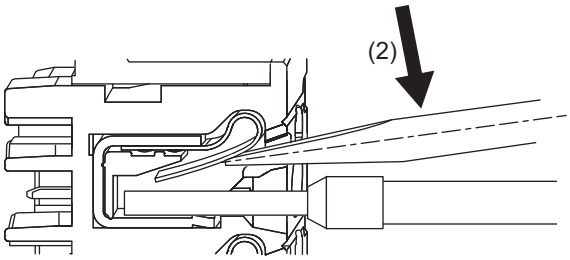

3. Leave the flat-blade screwdriver tilted and pull out the ferrule.

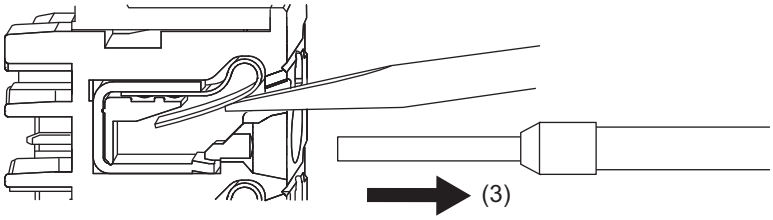

4. Remove the flat-blade screwdriver from the release hole.

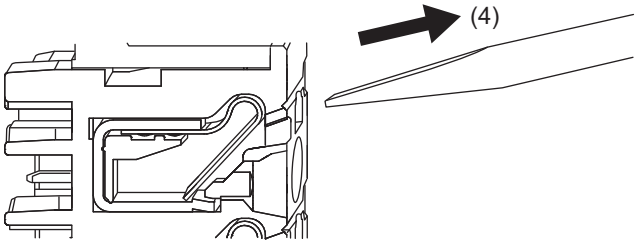

Removing a Terminal Block

1 While pressing the terminal block lock lever, pull the terminal block and remove it.

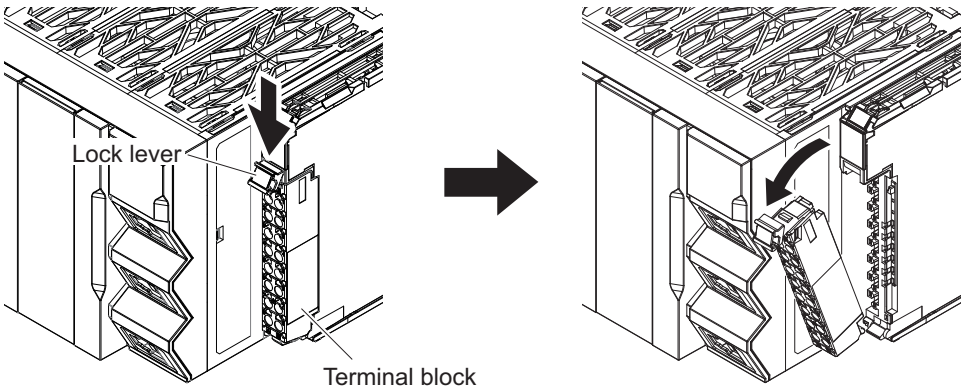

Attaching a Terminal Block

1 Put the hook of the terminal block on the guide at the bottom of the CPU Unit, raise the terminal block, and press it until it clicks.
The terminal block is fixed in place to the Unit when it clicks.
After you mount the terminal block, make sure that it is fixed to the Unit.

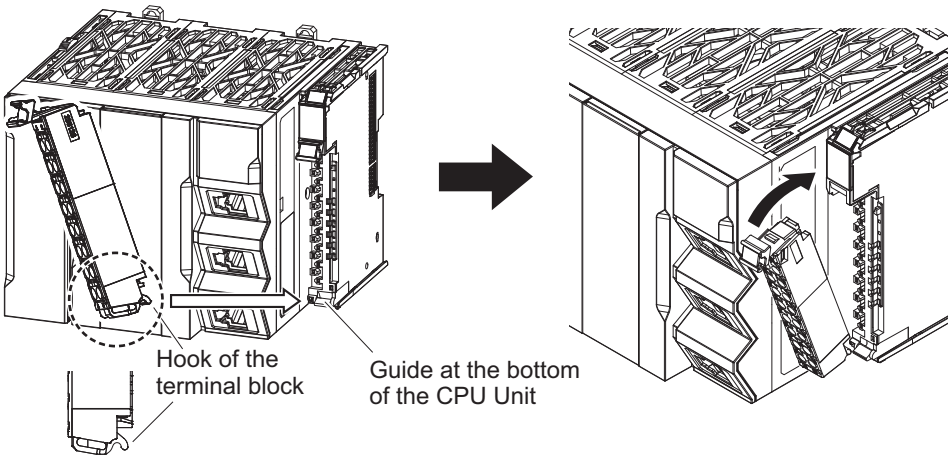

Preventing Incorrect Attachment of Terminal Blocks

In order to prevent unintentional installing of wrong terminal blocks, you can limit the combinations between Units and terminal blocks.
Insert three Coding Pins (NX-AUX02) into three of the six incorrect attachment prevention holes on the Unit and on the terminal block. Insert these pins into positions so that they do not interfere with each other when the Unit and terminal block are connected to each other.
You can use these pins to create a combination in which the wrong terminal block cannot be attached because the pin patterns do not match.

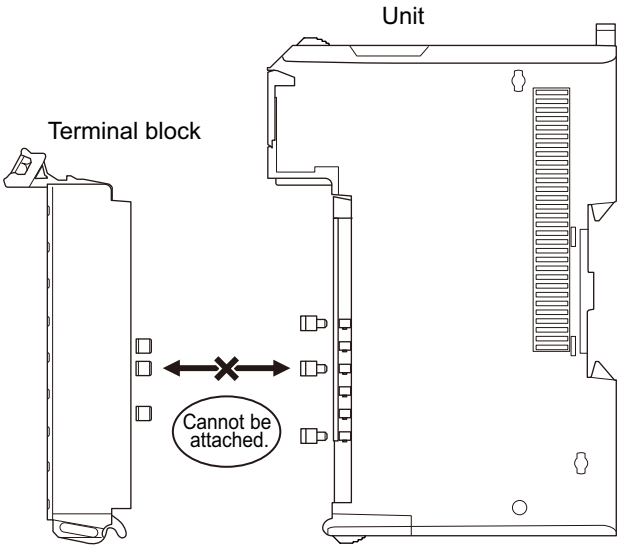

Types of Coding Pins

There are two types of Coding Pins, both with their own unique shape: one for terminal blocks and one for Units.
Three pins comes with each runner.

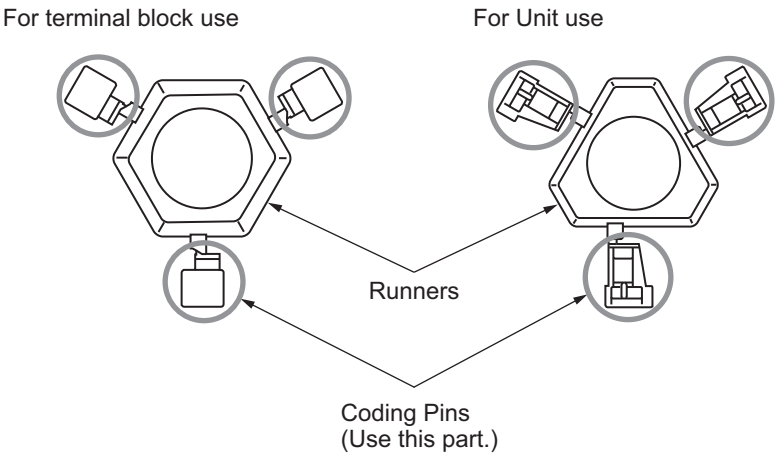

Use the following Coding Pins.

Name	Model	Specification
Coding Pin	NX-AUX02	For 10 Units (Terminal block: 30 pins, Unit: 30 pins)

Insertion Locations and Patterns of Coding Pins

Insert three Coding Pins of each on the terminal block and on the Unit at the positions designated by the numbers 1 through 6 in the figure below.
As shown in the following table, there are 20 unique pin patterns that can be used.

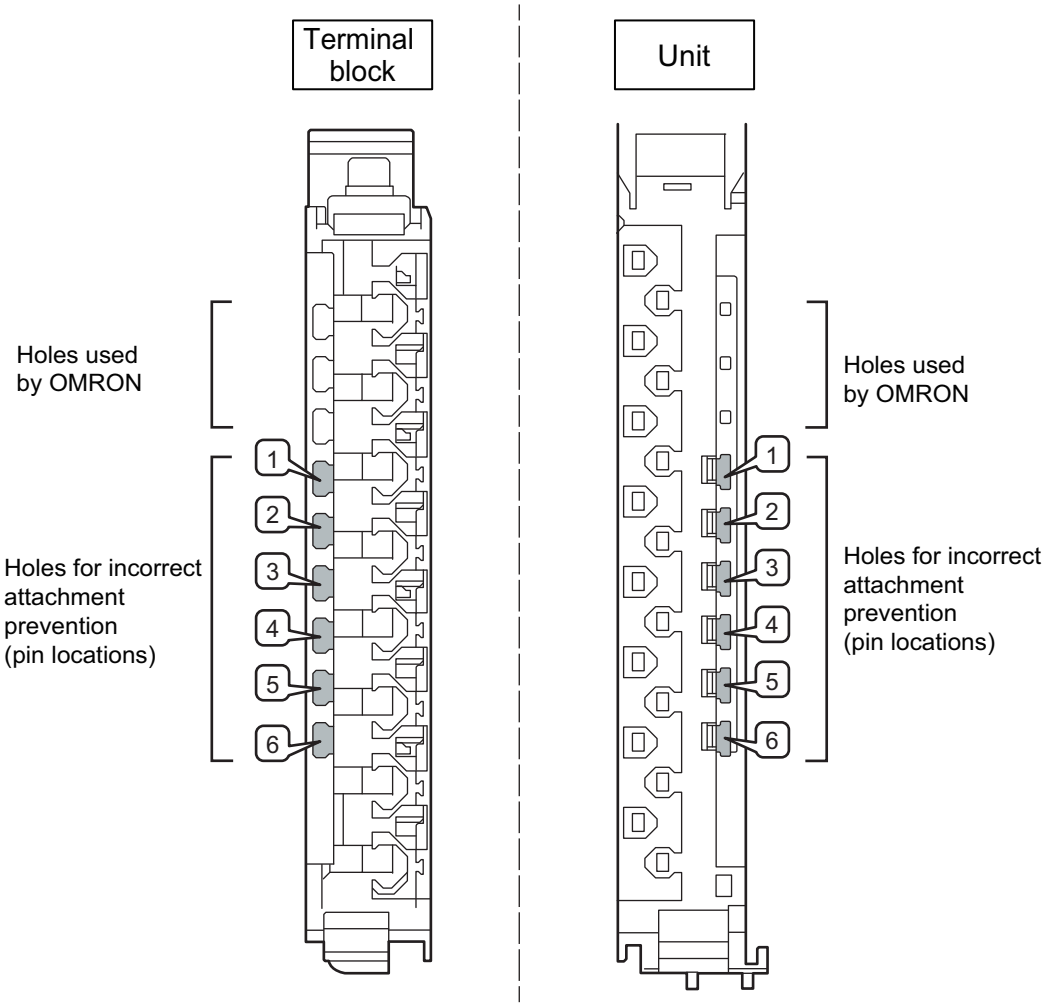

○: Pin inserted

Pattern	Pin locations for terminal block						Pin locations for Unit					
	1	2	3	4	5	6	1	2	3	4	5	6
No. 1	○	○	○							○	○	○
No. 2	○	○		○					○		○	○
No. 3	○	○			○				○	○		○
No. 4	○	○				○			○	○	○	
No. 5	○		○	○				○			○	○
No. 6	○		○		○			○		○		○
No. 7	○		○			○		○		○	○	
No. 8	○			○	○			○	○			○
No. 9	○			○		○		○	○		○	
No. 10	○				○	○		○	○	○		
No. 11		○	○	○			○				○	○
No. 12		○	○		○		○			○		○
No. 13		○	○			○	○			○	○	
No. 14		○		○	○		○		○			○
No. 15		○		○		○	○		○		○	
No. 16		○			○	○	○		○	○		
No. 17			○	○	○		○	○				○
No. 18			○	○		○	○	○			○	
No. 19			○		○	○	○	○		○		
No .20				○	○	○	○	○	○			

To create the maximum 20 patterns of combinations, you need two NX-AUX02 sets (for 10 Units).

Precautions for Correct Use

- OMRON uses the holes other than No. 1 to 6 in the figure above. If you insert a Coding Pin into one of the holes used by OMRON on the terminal block side, this makes it impossible to mount the terminal block on a Unit.
- Do not use Coding Pins that have been attached and removed. Doing so may cause it to drop.

● Inserting the Coding Pins

1 Hold the pins by the runner and insert a pin into one of the incorrect attachment prevention holes on the terminal block or on the Unit.

Terminal block

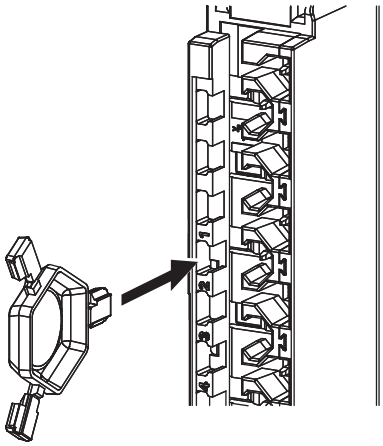

Unit

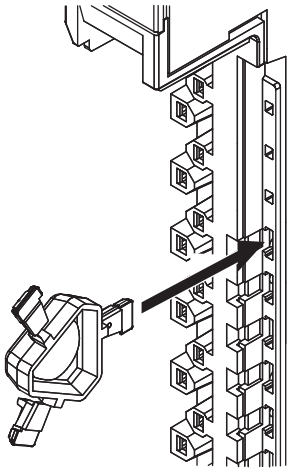

2 Rotate the runner to break off the Coding Pin.

Terminal block

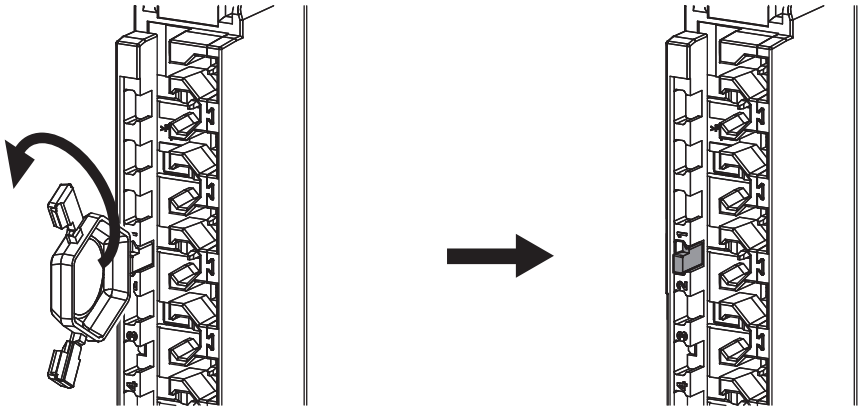

Unit

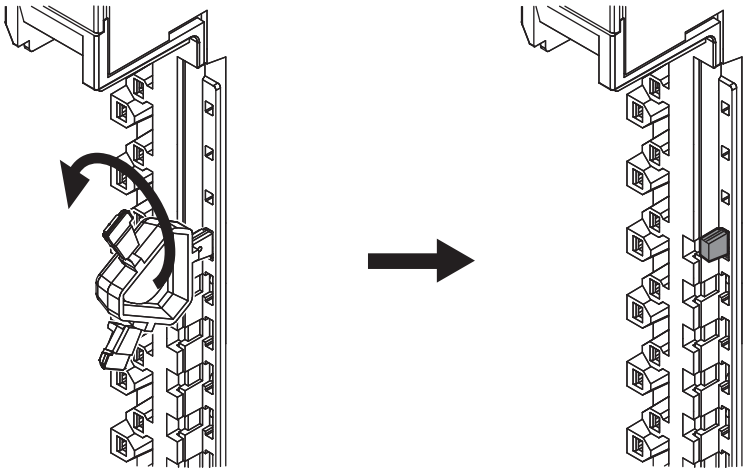

5-5 Control Panel Installation

To ensure system reliability and safety, the system must be designed and configured according to the installation environment (temperature, humidity, vibration, shock, corrosive gases, overcurrent, noise, etc.).

5-5-1 Temperature

Panels have been reduced in size due to space-saving and miniaturization in devices and systems, and the temperature inside the panel may be at least 10 to 15°C higher than outside the panel. Implement the following measures against overheating at the installation site and in the panel, and allow a sufficient margin for the temperature before use.

High Temperatures

Use the following cooling methods as required, taking into account the ambient temperature and the amount of heating inside the panel.

● Natural Cooling

- Natural cooling relies on natural ventilation through slits in the panel, rather than using cooling devices such as fans or coolers. When using this method, observe the following points.
- Do not install the Controller at the top of the panel, where hot air tends to stagnate.
- To provide ventilation space above and below the Controller, leave sufficient distance from other devices, wiring ducts, etc.
- Do not mount the Units in the wrong direction (e.g., vertically or upside down). Doing so may cause abnormal heating in the Controller.
- Do not install the Controller directly above any heat-generating equipment, such as heaters, transformers, and devices with high resistance.
- Do not install the Controller in a location exposed to direct sunlight.

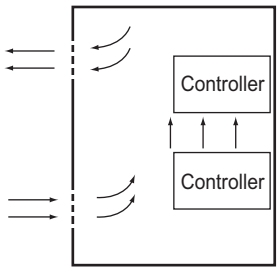

Natural Cooling

- **Forced Ventilation (by Fan at Top of Panel)**

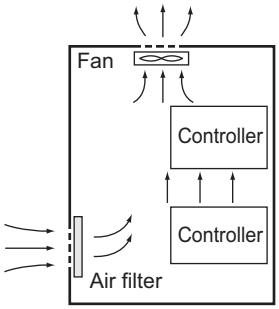

Forced Ventilation Method

- **Forced Air Circulation (by Fan in Closed Panel)**

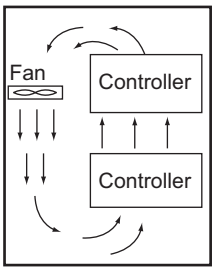

Forced Air Circulation

- **Room Cooling (Cooling the Entire Room Where the Control Panel Is Located)**

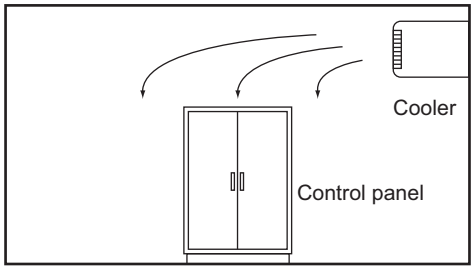

Room Cooling

Low Temperatures

The Controller may not start normally if the temperature is below 0°C when the power is turned ON. Maintain an air temperature of at least approximately 5°C inside the panel, by implementing measures such as installing a low-capacity space heater in the panel.
Alternatively, leave the Controller power ON to keep the Controller warm.

5-5-2 Humidity

Rapid temperature changes can cause condensation to occur, resulting in malfunctioning due to short-circuiting.
When there is a possibility of this occurring, take measures against condensation, such as leaving the Controller power ON at night or installing a heater in the control panel to keep it warmer.

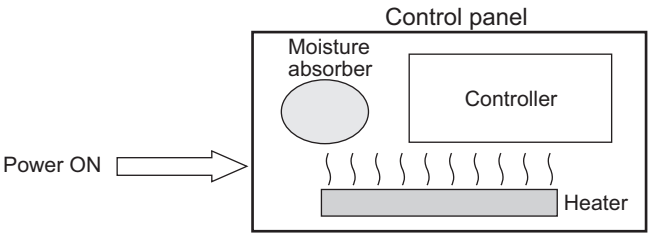

Examples of Measures against Condensation

5-5-3 Vibration and Shock

The Controller is tested for conformity with the sine wave vibration test method (IEC 60068-2-6) and the shock test method (IEC 60068-2-27) of the Environmental Testing for Electrotechnical Products. It is designed so that malfunctioning will not occur within the specifications for vibration and shock. If, however, the Controller is to be used in a location in which it will be directly subjected to regular vibration or shock, then implement the following countermeasures:

- Separate the control panel from the source of the vibration or shock.
  Or secure the Controller and the panel with rubber padding to prevent vibration.
- Make the building or the floor vibration-resistant.
- To prevent shock when other devices in the panel such as electromagnetic contactors operate, secure either the source of the shock or the Controller with rubber padding.

5-5-4 Atmosphere

Using the Controller in any of the following locations can cause defective contact with connectors and corrosion of components. Implement countermeasures such as purging the air as required.

- In locations exposed to dust, dirt, salt, metal powder, soot, or organic solvents, use a panel with an airtight structure. Be careful of temperature increases inside the panel.
- In locations exposed to corrosive gas, purge the air inside the panel to clear the gas and then pressurize the inside of the panel to prevent gas from entering from outside.
- In locations where flammable gas is present, either use an explosion-protected construction or do not use the Controller.

5-5-5 Electrical Environment

When installing or wiring devices, make sure that there will be no danger to people and that noise will not interfere with electrical signals.

Controller Installation Location

Install separately the Controller from high-voltage (600 V or higher) and power devices to ensure safe operation and maintenance. Install the Controller as far away as possible in case of unavoidable circumstances.

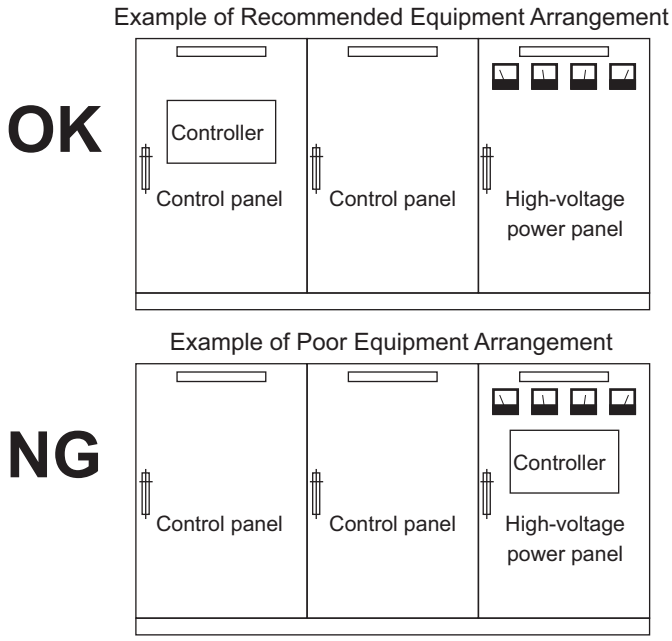

Examples of Equipment Arrangement in Panel with High-voltage Devices

Arrangement of Controller and Units

The coils and contacts in electromagnetic contacts and relays in an external circuit are sources of noise. Do not install them close to the Controller. Locate them at least 100 mm away from the Controller.

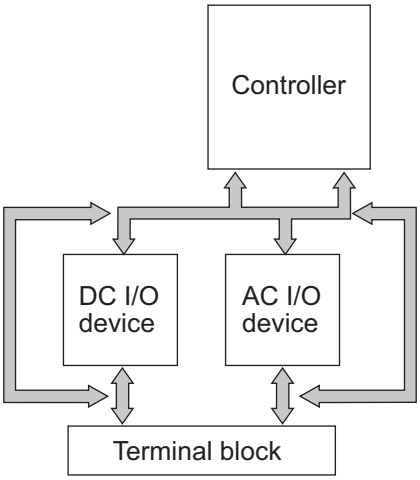

Example of Arrangement in Panel

Wire Layout for the Power Supply System

Observe the following points when wiring the power supply system.

- Separate the Controller power supply from the I/O device power supply and install a noise filter near the Controller power supply feed section.

- Use an isolating transformer to significantly reduce noise between the Controller and the ground. Install the isolating transformer between the Controller power supply and the noise filter, and do not ground the secondary coil of the transformer.
- Keep the wiring between the transformer and the Controller as short as possible, twist the wires well, and keep the wiring separate from high-voltage and power lines.

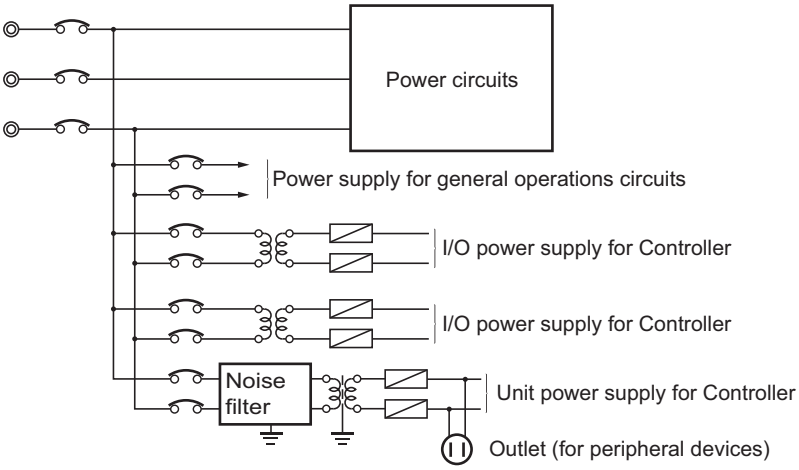

Power Supply System Diagram

Wiring External I/O Signal Lines

Observe the following points when wiring external I/O signal lines.

- To absorb reverse electromotive force when an inductive load is connected to an output signal, connect a surge suppressor near the inductive load in an AC circuit, or connect a diode near the inductive load in a DC circuit.

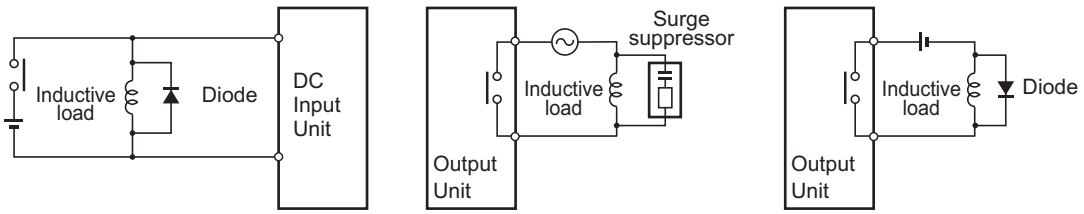

Connect a diode in a DC circuit.

Connect a surge suppressor in an AC circuit.

Connect a diode in a DC circuit.

Input Signal Noise Countermeasures

Output Signal Noise Countermeasures

- Never bundle output signal lines with high-voltage or power lines, and do not route them in close proximity or parallel to such lines.
  If output signal lines must be routed in close proximity to such lines, place them in separate ducts or conduits. Be sure to ground the ducts or conduits.

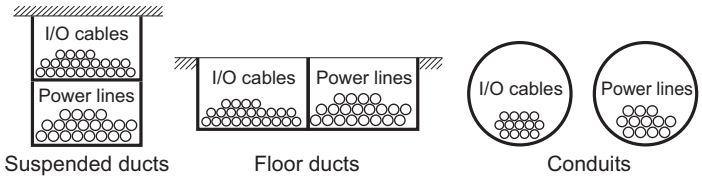

Suspended ducts

Floor ducts

Conduits

I/O Cable Arrangement

- If the signal lines and power lines cannot be routed in separate ducts, use shielded cable. Connect the shield to the ground terminal at the Controller, and leave it unconnected at the input device.
- Wire the lines so that common impedance does not occur.
  Such wiring will increase the number of wires, so use common return circuits.
  Use thick wires with sufficient allowance for the return circuits, and bundle them with lines of the same signal level.
- For long I/O lines, wire the input and output signal lines separately.
- Use twisted-pair wires for pilot lamps (and particularly lamps with filaments).
- Use countermeasures, such as CR surge absorbers and diodes, for input device and output load device noise sources, as required.

External Wiring

Wiring, and noise countermeasures in particular, are based on experience, and it is necessary to closely manage wiring based on experience and information in the manuals.

● Wiring Routes

Each of the following combinations includes different signal types, properties, or levels. They will cause the signal-to-noise ratio to drop due to factors such as electrical induction. As a general rule when wiring, either use separate cables or separate wiring routes for these items. Future maintenance operations and changes to the system will also be made easier by carefully organizing the wiring from the start.

- Power lines and signal lines
- Input signals and output signals
- Analog signals and digital signals
- High-level signals and low-level signals
- Communications lines and power lines
- DC signals and AC signals
- High-frequency devices (such as Inverters) and signal lines (communications)

● Wiring

Observe the following points when wiring power supply and signal cables.

- When routing signal cables with differing characteristics through the same duct, always keep them separated.
- As much as possible, avoid routing multiple power supply lines through the same duct.
  If it cannot be avoided, then construct a partition between them in the duct and ground the partition.

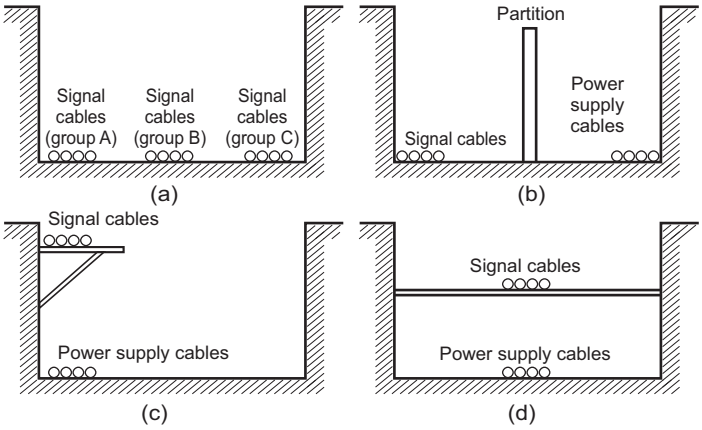

Partitioning Methods for Signal and Power Supply Cables

- To avoid overheating the conduits when using conduits for wiring, do not place wires for a single circuit in separate conduits.

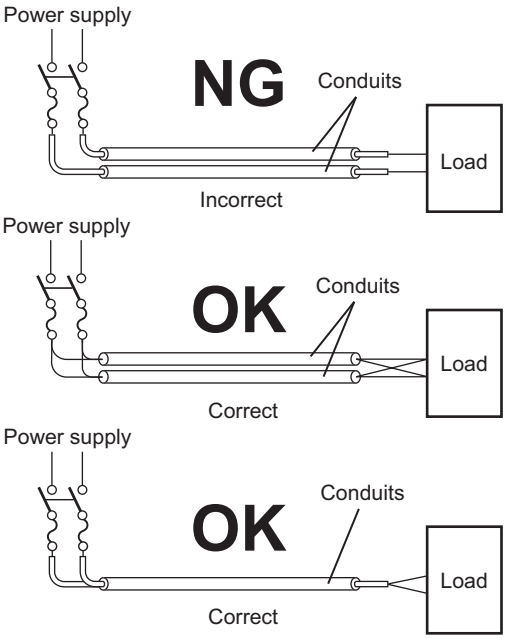

Parallel Wiring (Single Phase)

- Power cables and signal cables adversely affect each other. Do not wire them in parallel.
- Noise induction may occur if the Controller is installed in a panel that includes high-voltage devices. Wire and install them as far apart as possible. (Refer to *Controller Installation Location* on page 5-59.)
- Either install the Controller a minimum of 200 mm away from high-voltage lines or power lines, or place the high-voltage lines or power lines in metal tubing and completely ground the metal tubing to 100 Ω or less.

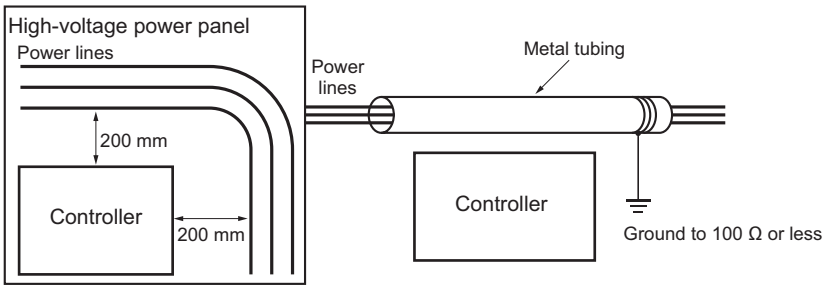

Example: Separating Controller from Power Lines

● Other Precautions

- Digital I/O Units have both plus and minus commons, so pay attention to the polarity when wiring.

5-5-6 Grounding

This section describes the earthing methods and precautions.

Considerations for Earthing Methods

Local potential fluctuations due to lightning or noise occurred by power devices will cause potential fluctuations between ground terminals of devices. This potential fluctuation may result in device malfunction or damage. To prevent this, it is necessary to suppress the occurrence of a difference in electrical potential between ground terminals of devices. You need to consider the earthing methods to achieve this objective.

The recommended earthing methods for each usage condition are given in the following table.

Specification of communications cables for EtherCAT and EtherNet/IP	Earthing methods			
	Equipotential bonding system	Star earthing		Daisy chain
		Connecting devices and noise sources to separate earth electrodes	Connecting devices and noise sources to a common earth electrode	
The cable shield connected to the connector hood at both ends of the communications cable	Recommended	Recommended	Not recommended	Not recommended
Neither EtherCAT nor EtherNet/IP used	Recommended	Recommended	Not recommended	Not recommended

Additional Information

- In a country or region where the earthing method is regulated, you must comply with the regulations. Refer to the applicable local and national ordinances of the place where you install the system, or other international laws and regulations.
- For details on wiring EtherCAT or EtherNet/IP, refer to the *NJ/NX-series CPU Unit Built-in EtherCAT Port User's Manual* (Cat. No. W505) or the *NJ/NX-series CPU Unit Built-in EtherNet/IP Port User's Manual* (Cat. No. W506).
- Ethernet switches are used with the EtherNet/IP. For information on the environmental resistance of the Ethernet switch to use, the grounding between Ethernet switches, or the specifications of cables, ask the Ethernet switch manufacturer.

Each of these earthing methods is given below.

● Equipotential Bonding System

Equipotential bonding is an earthing method in which steel frames and building structures, metal ducts and pipes, and metal structures in floors are connected together and make connections to the earth trunk line to achieve a uniform potential everywhere across the entire building. We recommend this earthing method.

The following figure shows an example of an equipotential bonding system.
Connect the main earthing terminal and building structures together with equipotential bonding conductors and embed the mesh ground line in each floor.
Connect the ground line of each control panel to the equipotential bonding system.

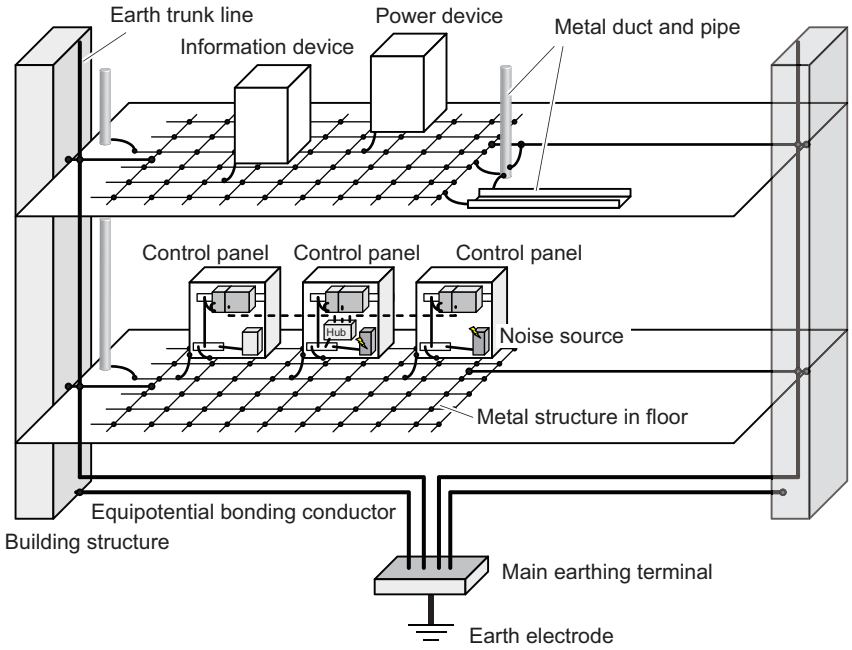

● Star Earthing

If the earthing method used for the building is not equipotential bonding or the earthing system is unknown, choose (a) from the earthing methods given below.

a. Installation method by connecting devices and noise sources to separate earth electrodes
This is an earthing method to separately ground an earth electrode of the device that is connected with a communications cable or other devices and an earth electrode of a high-power device that could be a noise source, such as a motor or inverter. Each earth electrode must be ground to 100 Ω or less.
Connect the ground lines of the device that is connected with a communications cable and other devices as a bundle to a single earth electrode. Be sure that the earth electrode is separated by a minimum of 10 m from any other earth electrode of a device that could be a noise source.

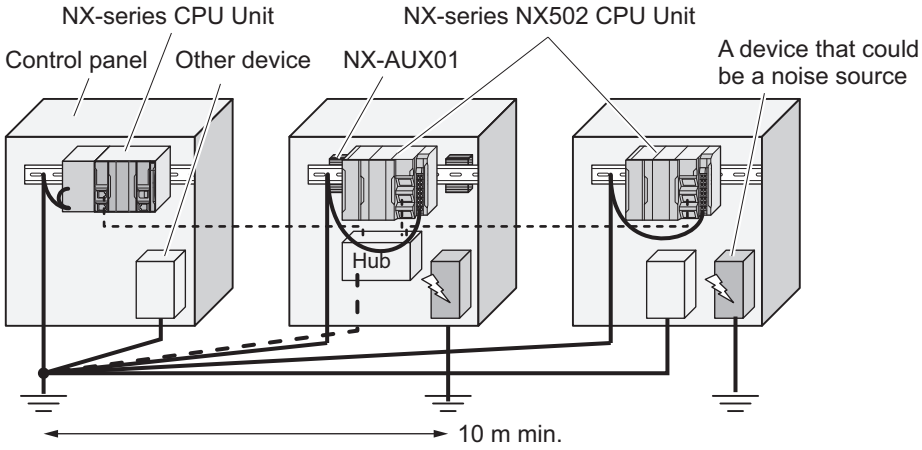

b. Installation method by connecting devices and noise sources to a common earth electrode
This is an earthing method to connect the device that is connected with a communications cable, other devices, and a device that could be a noise source, to a common earth electrode.
This earthing method is not recommended, because the device that is a potential noise source may interfere electromagnetically with other devices.

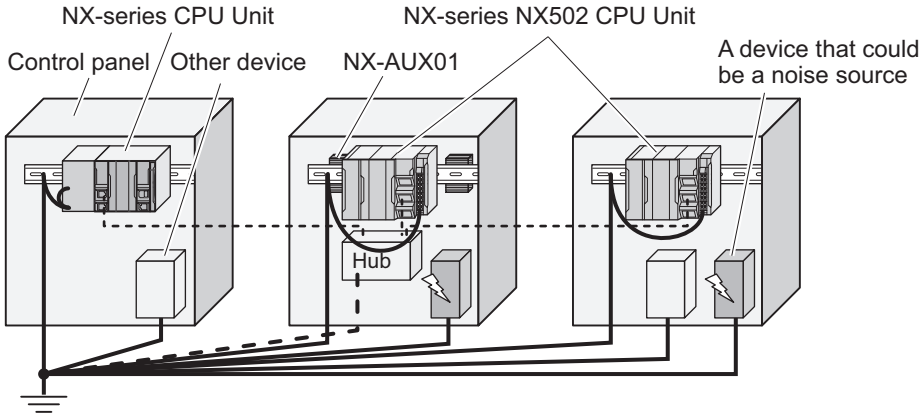

● Daisy Chain

This is an earthing method to connect the device that is connected with a communications cable, other devices, and a device that could be a noise source using a daisy-chain topology to a common earth electrode.
This earthing method is not recommended because the device that could be a noise source may interfere electromagnetically with other devices.

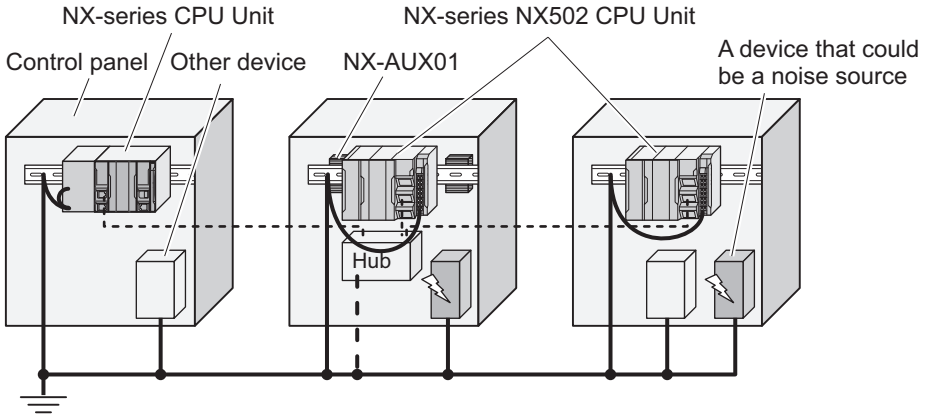

Precautions for Grounding

General Precautions

- To prevent electrical shock, do not connect devices to ground poles (or steel frames) with non-equalized potential to which multiple devices are connected.
- Use a ground pole as close to the Controller as possible and keep the ground line as short as possible.
- If the same ground is used for both the signal lines and the enclosure, isolate the channel base (a grounded metal plate inside a control panel) with an insulating material.
  Refer to *Isolating the CPU Rack from the Control Panel* on page 5-40 for how to isolate the CPU Rack of an NX502 CPU Unit.

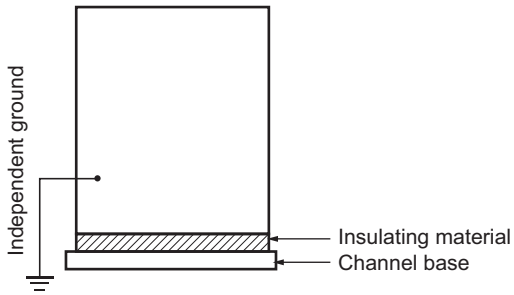

Example: Insulating and Grounding an Enclosure

- If high-frequency equipment is present, then ground not only the high-frequency equipment but also the panel itself in which the Controller is housed.
- As shown in the following diagram, when using shielded cable for I/O wiring, connect the shield near the Controller to the enclosure ground terminal.
  Follow the instructions in the Communications Unit manual for preparing shielded communications cable.

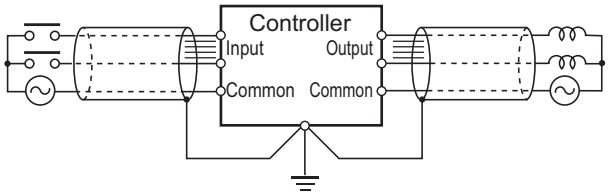

Shielded Cable Ground

Controller Ground Terminals

The Controller has the following ground terminal.

Grounding type	Symbol	Connection
Functional Grounding		Ground this terminal when power supply noise causes malfunctioning.

When the functional ground terminal is correctly grounded, it is generally effective in suppressing power supply common noise. Occasionally, however, grounding this terminal will result in picking up more noise, so be careful when using it.

6

Troubleshooting

This section describes the overview of the methods for checking errors.

6-1 Overview of Troubleshooting 6-2

6-1 Overview of Troubleshooting

You manage all of the errors that occur on the NJ/NX-series Controller as events.
This allows you to see what errors have occurred and find corrections for them with the same methods for the entire range of errors that is managed (i.e., CPU Unit, X Bus Units, NX Units, NX-series Slave Terminals, EtherCAT slaves*1, and CJ-series Units).

*1. Only Sysmac devices are supported.

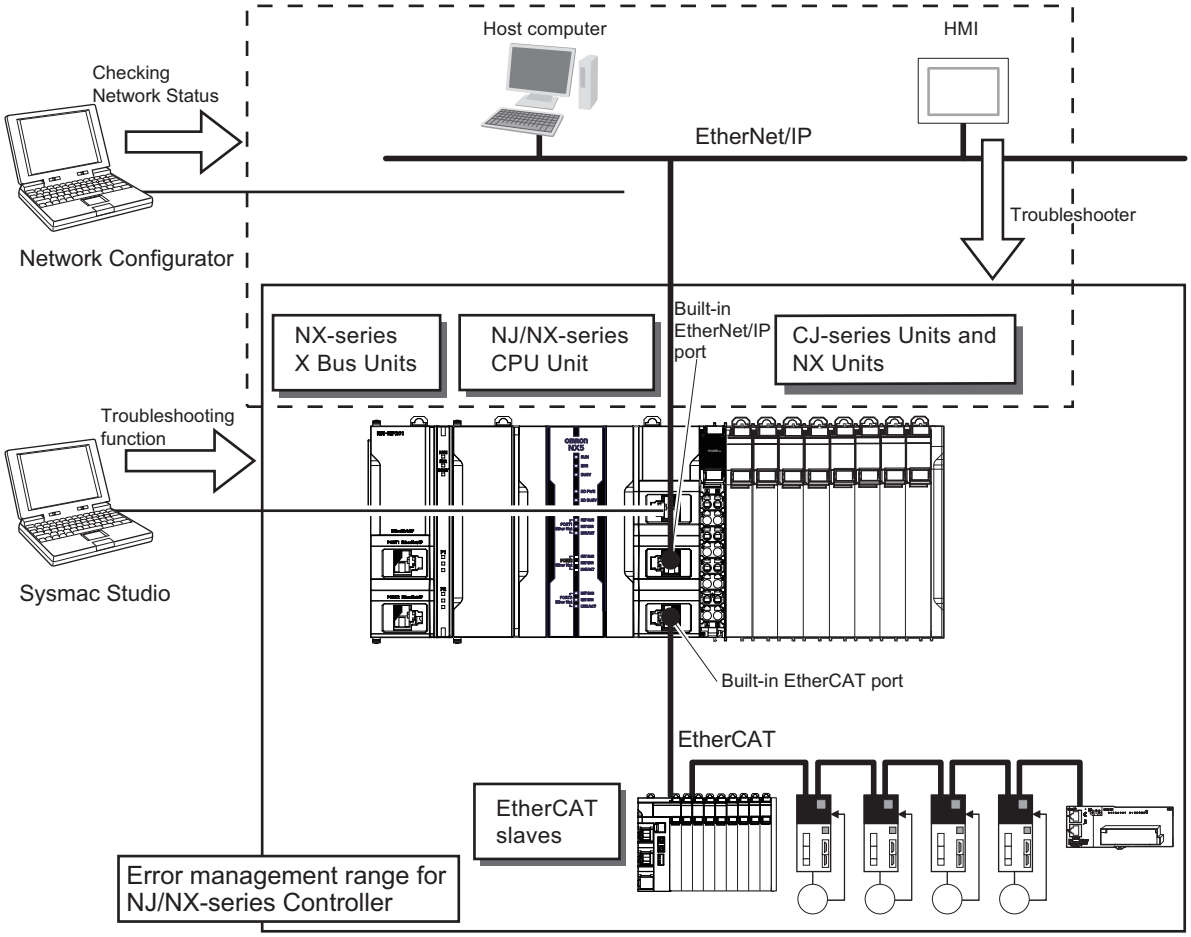

You can use the troubleshooting functions of the Sysmac Studio or the Troubleshooter on an HMI to quickly check for errors that have occurred and find corrections for them.

Refer to the *NJ/NX-series Troubleshooting Manual (Cat. No. W503)* for error types and details, specific corrections when errors occur, and troubleshooting information on the entire NJ/NX-series Controllers.

7

Inspection and Maintenance

This section describes the required inspections and maintenance. It also describes the service life and replacement procedure for the Battery.

7-1 Cleaning and Maintenance 7-2

7-1-1 Cleaning 7-2

7-1-2 Periodic Inspections 7-3

7-1-3 Unit Replacement Precautions 7-4

7-2 Replacing the Battery 7-6

7-1 Cleaning and Maintenance

This section describes daily maintenance and the cleaning and inspection methods.
Daily or periodic inspections are required in order to maintain the NX-series NX502 CPU Unit's functions in peak operating condition.

7-1-1 Cleaning

Perform the following cleaning procedures periodically to ensure the NX-series CPU Unit is maintained in the best operating condition. Always turn OFF the power supply to the Controller before performing the cleaning procedures.

- Wipe off the dust or dirt on the front, top or bottom of the Unit over with a dry, soft cloth when doing daily cleaning.
- If dust or dirt remains even after wiping with a soft, dry cloth, wipe over with a cloth that has been wet with a sufficiently diluted detergent (2%) and wrung dry.
- A smudge may remain on the Unit from gum, vinyl, or tape that was left on for a long time. Remove the smudge when cleaning.

Precautions for Correct Use

- Never use volatile solvents, such as paint thinner, benzene, or chemical wipes.
- Do not touch the connectors.

7-1-2 Periodic Inspections

Although the major components in NX-series Controllers have an extremely long life time, they can deteriorate under improper environmental conditions. Periodic inspections are thus required to ensure that the required conditions are being kept.
Inspection is recommended at least once every six months to a year, but more frequent inspections may be necessary depending on the severe environments.
Take immediate steps to correct the situation if any of the conditions in the following table are not met.

Periodic Inspection Items

No.	Inspection item	Inspection details	Criteria	Correction
1	External power supply	Check for voltage fluctuations at the power supply terminals.	The voltage must be within the allowable voltage fluctuation range.	Use a voltage tester to check the power supply at the terminals. Take necessary steps to bring voltage of the supplied power to within the allowable voltage fluctuation range.
2	I/O power supply	Check for voltage fluctuations at the I/O terminals.	Voltages must be within specifications for each Unit.	Use a voltage tester to check the I/O power supply at the terminals. Take necessary steps to bring voltage fluctuations within limits.
3	Ambient environment	Check the ambient temperature. (Inside the control panel if the Controller is in a control panel.)	0 to 55°C	Use a thermometer to check the temperature and ensure that the ambient temperature remains within the allowed range of 0 to 55°C.
		Check the ambient humidity. (Inside the control panel if the Controller is in a control panel.)	Relative humidity must be 10% to 95% with no condensation.	Use a hygrometer to check the humidity and ensure that the ambient operating humidity remains between 10% and 95%. Make sure that condensation does not occur due to rapid changes in temperature.
		Check that the Controller is not in direct sunlight.	Not in direct sunlight	Protect the Controller if necessary.
		Check for accumulation of dirt, dust, salt, metal powder, etc.	No accumulation	Clean and protect the Controller if necessary.
		Check for water, oil, or chemical sprays hitting the Controller.	No spray	Clean and protect the Controller if necessary.
		Check for corrosive or flammable gases in the area of the Controller.	No corrosive or flammable gases	Check by smell or use a gas sensor.
		Check the level of vibration or shock.	Vibration resistance and shock resistance must be within specifications.	Install cushioning or shock absorbing equipment if necessary.
		Check for noise sources near the Controller.	No significant noise sources	Either separate the Controller and noise source or protect the Controller.

No.	Inspection item	Inspection details	Criteria	Correction
4	Installation and wiring	Check that the DIN Track mounting hooks on all Units are securely locked.	No looseness	Securely lock the DIN Track mounting hooks.
		Check that cable connectors are fully inserted and locked.	No looseness	Correct any improperly installed connectors.
		Check that the screws on the End Plates (PFP-M) are tight.	No looseness	Tighten loose screws with a Phillips-head screwdriver.
		Check that each Unit is connected along the hookup guides, and fully inserted until it contacts the DIN Track.	The Units must be connected and securely in place on the DIN Track.	Connect each Unit along the hookup guides, and insert each Units until it contacts the DIN Track.
		Check for damaged external wiring cables.	No visible damage	Check visually and replace cables if necessary.
5	User-serviceable parts	Battery Set CJ1W-BAT01 Check whether the battery has reached its service life.	Service life expectancy is 5 years at 25°C. Depending on model and ambient temperature.	Replace the battery when its service life has passed even if a battery error has not occurred. (Battery life depends upon the model, and ambient conditions.) Refer to *7-2 Replacing the Battery* on page 7-6 for the service life of individual model.

Tools Required for Inspections

● Required Tools

- Flat-blade screwdriver
- Phillips screwdriver
- Voltage tester or digital multimeter
- Industrial alcohol and pure cotton cloth
- Antistatic gas duster

● Tools Required Occasionally

- Oscilloscope
- Thermometer and hygrometer

7-1-3 Unit Replacement Precautions

If you find any faulty Unit after check, replace the Unit according to the following points.

- Do not replace a Unit until the power is turned OFF.
- Check the new Unit to make sure that there are no errors.
- If you return a faulty Unit for repair, describe the problem in as much detail as possible, enclose this description with the Unit before returning it.
- For poor contact, take a clean cotton cloth, soak the cloth in industrial alcohol, and carefully wipe the contacts clean. Be sure to remove any lint prior to remounting the Unit.

Precautions for Safe Use

- Make sure that the required data, including the user program, configurations, settings, and variables, is transferred to a CPU Unit that was replaced and to externally connected devices before restarting operation. Be sure to include the tag data link settings and routing tables, which are stored in the CPU Unit.
- The absolute encoder home offsets are retained in the CPU Unit as absolute encoder information.
  When you change the combination of the CPU Unit and Servomotor, e.g., when you add or replace a Servomotor, define the absolute encoder home again.

Precautions for Correct Use

- If you replace a slave or Unit, refer to the operation manual for the slave or Unit for information on the data required for individual slaves or Units and redo the necessary settings.
- If you use the OPC UA server function, refer to the *NJ/NX-series CPU Unit OPC UA User's Manual (Cat. No. W588)* for the description of how to replace CPU Units.

7-2 Replacing the Battery

The separately-sold Battery for clock is one of the NX-series components that require periodic replacement as preventive maintenance. This section describes how to replace the Battery.

Replacement Battery

Use the Battery CJ1W-BAT01 for replacement.

Precautions for Correct Use

Be sure to mount a Battery within two years of the production date shown on the Battery label.

Production Date

OMRON
CJ1W-BAT01
18-03

Manufactured in March 2018.

Replacement Procedure

Use the following procedure to replace the battery.

Precautions for Safe Use

We recommend mounting or replacing the Battery with the power turned OFF to prevent the CPU Unit's sensitive internal components from being damaged by static electricity and to prevent malfunctions. The Battery can be mounted or replaced without turning OFF the power supply. To do so, always touch a grounded piece of metal to discharge static electricity from your body before you start the procedure.
If the Low Battery Voltage error occurs after you mount the Battery, connect the Sysmac Studio and clear the error.

Additional Information

UL standards require that batteries be replaced by experienced technicians. Always place an experienced technician in charge of battery replacement.

1 Turn OFF the power supply to the Controller.
If the CPU Unit has not been ON, turn it ON for at least five minutes and then turn it OFF.

Additional Information

The CPU Unit has a built-in capacitor that retains the clock data during battery replacement or power interruptions.
If power is not turned ON for at least five minutes before replacing the battery, the built-in capacitor cannot be fully charged and the clock data may be lost during battery replacement.

2 Remove the battery cover.
Refer to *5-3-10 Battery Installation* on page 5-27 for how to remove it.

3 After removing an old battery, install a new battery.

4 Press in the battery harness and attach the battery cover.

Precautions for Safe Use

- Apply power for at least five minutes before changing the Battery. Install a new Battery within five minutes (at 25°C) of turning OFF the power supply. If power is not supplied for at least 5 minutes, the retained clock data may be initialized.
- The Battery may leak, rupture, heat, or ignite. Never short-circuit, charge, disassemble, heat, or incinerate the Battery or subject it to strong shock.
- Dispose of any Battery that has been dropped on the floor or otherwise subjected to excessive shock. Batteries that have been subjected to shock may leak if they are used.

Precautions for Correct Use

Turn ON the power after replacing the Battery for a CPU Unit that has been unused for a long time. Leaving the CPU Unit unused again without turning ON the power even once after the Battery is replaced may result in a shorter Battery life.

Additional Information

The *Low Battery Voltage* event is cleared automatically the next time the Controller is turned ON after replacing the Battery.

Battery Service Life and Replacement Period

The service life of a battery is five years. Generally, the service life of a battery varies depending on the ambient temperature and the power ON time rate. The NX502 CPU Unit, due to low power consumption, ensures a battery life of 60 months (five years), which is equivalent to the battery service life.
Make a plan to replace the Battery so that the service life of the Battery will not exceed the minimum lifetime under the normal product usage condition.

The Battery service life when power ON time rate is 0% (i.e., power OFF)

Unit model number	Approx. minimum lifetime [month]*1		
	25°C	40°C	55°C
NX502-□□□□	60		

*1. This is the life expectancy which Omron guarantees, based on the calculation worst value of the part's specification of the product.

Low Battery Indicators

If the Controller Setup has been set to detect a low-battery error, the ERROR indicator on the front of the CPU Unit will flash when the battery is nearly discharged.
If the ERROR indicator flashes, connect the Sysmac Studio, and then check the CPU Unit's Battery connection if the Sysmac Studio shows a *Low Battery Voltage* or *Real-Time Clock Stopped* event. If the Battery is properly connected, replace the Battery with a new one as soon as possible.

Once a low-battery error has been detected, it will take 5 days (at an ambient temperature of 25°C or less) before the battery fails if power has been supplied at least once a day.
Clock data can be retained by ensuring that the CPU Unit power is not turned OFF until the Battery has been replaced.

Additional Information

The Battery will lose its charge faster at high ambient temperatures.

A

Appendices

The appendices provide the general specifications of the CPU Unit and Unit dimensions.

A-1 Specifications A-2

A-2 Dimensions A-3

A-2-1 NX-series NX502 CPU Unit A-3

A-2-2 End Cover A-4

A-2-3 SD Memory Card A-4

A-3 List of Terminal Block Models A-5

A-3-1 Model Notation A-5

A-3-2 List of Terminal Block Models A-5

A-4 Version Information A-7

A-5 Support Functions of the CPU Units and Restrictions on the NX Units A-8

A-1 Specifications

This section gives the general specifications that are common to NX-series NX502 CPU Unit and their relevant products.
For the electrical and mechanical specifications, refer to the Models and Specifications section for each product.

Item		Specification
Enclosure		Mounted in a panel
Grounding method		Ground to less than 100 Ω.
Operating environment	**Ambient operating temperature**	0 to 55°C
	Ambient operating humidity	10% to 95% (with no condensation)
	Atmosphere	Must be free from corrosive gases.
	Ambient storage temperature	-25 to 70°C (excluding battery)
	Altitude	2,000 m max.
	Pollution degree	2 or less: Meets IEC 61010-2-201.
	Noise immunity	2 kV on power supply line (Conforms to IEC 61000-4-4.)
	Overvoltage category	Category II: Meets IEC 61010-2-201.
	EMC immunity level	Zone B
	Vibration resistance	Conforms to IEC 60068-2-6. 5 to 8.4 Hz with 3.5-mm amplitude, 8.4 to 150 Hz, acceleration of 9.8 m/s^2 100 min each in X, Y, and Z directions (10 sweeps of 10 min each = 100 min total) Gravity acceleration is assumed to be G=9.8 m/s^2.
	Shock resistance	Conforms to IEC 60068-2-27. 147 m/s^2, 3 times in X, Y, and Z directions Gravity acceleration is assumed to be G=9.8 m/s^2.
Battery	**Life**	5 years at 25°C (Power ON time rate 0% (power OFF))
	Model	CJ1W-BAT01 (sold separately)
Applicable standards		Refer to the OMRON website (http://www.ia.omron.com/) or consult your OMRON representative for the applicable standards.

A-2 Dimensions

Dimensions of the Units are shown as follows. The unit of dimension is millimeter.

A-2-1 NX-series NX502 CPU Unit

NX502-□□□□

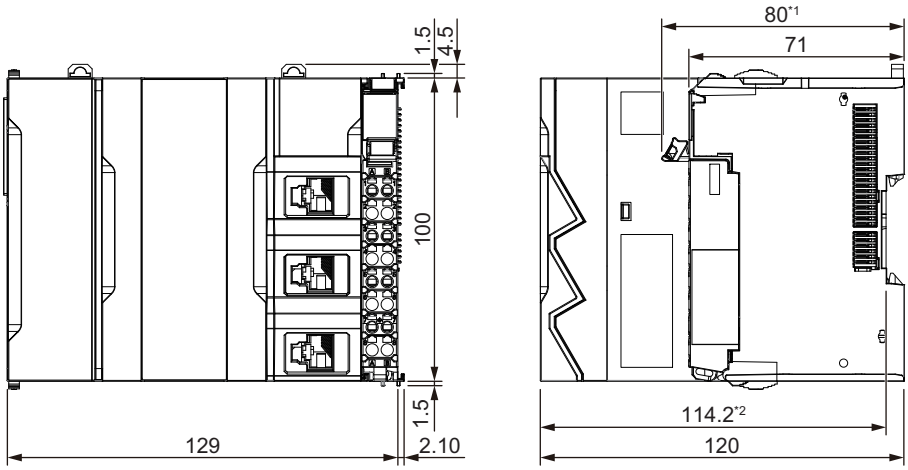

Unit: (mm)

*1. The dimension from the terminal block lock lever to the back surface of the CPU Unit.
*2. The dimension from the attachment surface of the DIN Track to the front surface of the CPU Unit.

For dimensions after attaching the communications cables, refer to *5-3-14 Assembled Appearance and Dimensions* on page 5-32.

A-2-2 End Cover

NX-END02

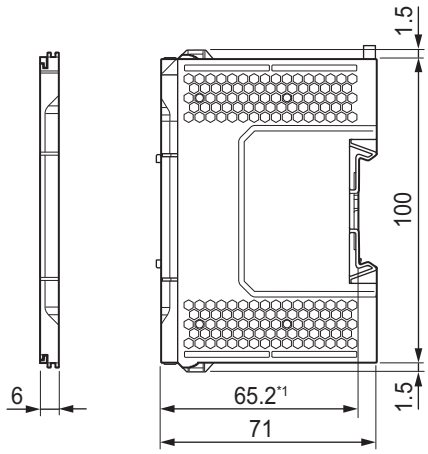

Unit: [mm]

*1. The dimension from the attachment surface of the DIN Track to the front surface of the end cover.

A-2-3 SD Memory Card

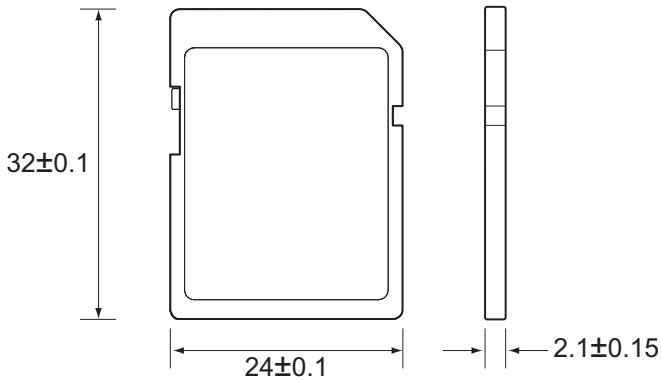

Unit: [mm]

A-3 List of Terminal Block Models

This section provides a list of screwless clamping terminal block models that you can use with an NX-series NX502 CPU Unit, EtherCAT Coupler Unit, or NX Unit.

A-3-1 Model Notation

The model designation of a terminal block is given as follows.

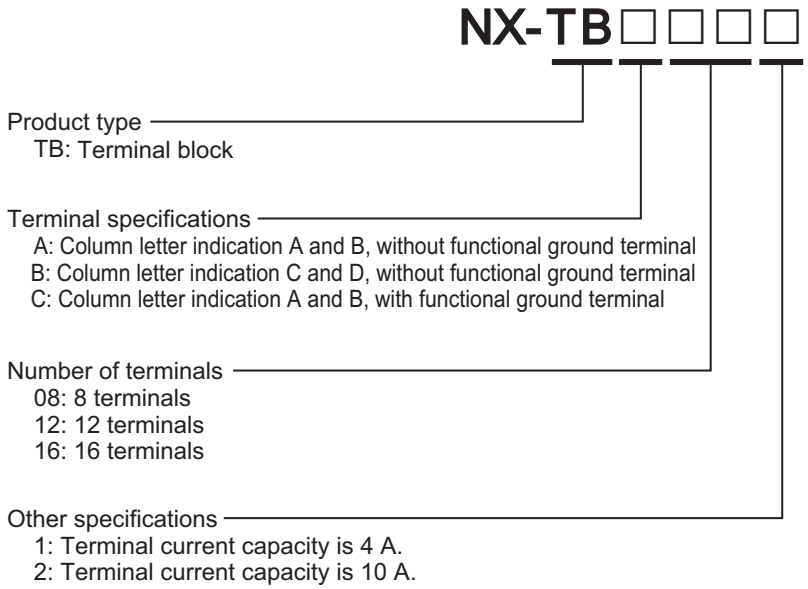

A-3-2 List of Terminal Block Models

The following table shows a list of terminal blocks.
Use the NX-TBC082 for NX-series NX502 CPU Units.
If the NX-TBC082 is attached to an NX502, limit the current that passes through the terminals via unwired terminals to 4 A or less, although the terminal capacity of the NX-TBC082 is 10 A.

Terminal block model	Number of terminals	Ground terminal indication	Current capacity of terminals
NX-TBA081	8	Not provided	4 A
NX-TBA121	12	Not provided	4 A
NX-TBA161	16	Not provided	4 A
NX-TBB121	12	Not provided	4 A
NX-TBB161	16	Not provided	4 A
NX-TBA082	8	Not provided	10 A
NX-TBA122	12	Not provided	10 A
NX-TBA162	16	Not provided	10 A
NX-TBB082	8	Not provided	10 A
NX-TBB122	12	Not provided	10 A
NX-TBB162	16	Not provided	10 A
NX-TBC082	8	Provided	10 A

Terminal block model	Number of terminals	Ground terminal indication	Current capacity of terminals
NX-TBC162	16	Provided	10 A

Note When you purchase a terminal block, purchase an NX-TB□□□2.

A-4 Version Information

Refer to *Version Information for NX-series Controllers* in the *NJ/NX-series CPU Unit Software User's Manual (Cat. No. W501)* for the relationship between the unit versions of NX-series NX502 CPU Unit and the Sysmac Studio versions, and for the functions that are supported by each unit version.
Refer to *A-5 Support Functions of the CPU Units and Restrictions on the NX Units* on page A-8 for information on NX Units that can be connected to the CPU Unit.

A-5 Support Functions of the CPU Units and Restrictions on the NX Units

Some support functions of the CPU Unit are restricted depending on the models and unit versions of NX Units mounted on it.
The table below shows the functions that are restricted depending on the models and unit versions of the NX Units.
Refer to the *NX-series Data Reference Manual* (Cat. No. W525) for details on supported models and unit versions of NX Units.

Function	
Restarting	Restarting a specified NX Unit
Monitoring total power-ON time	
Restarting after transferring Unit operation settings	Restarting the NX Unit to which the Unit operation settings were transferred when you transfer the settings to a specified NX Unit

Refer to the *NX-series Data Reference Manual* (Cat. No. W525) for information on NX Units that can be connected to the NX-series NX502 CPU Unit.

I

Index

I

Index

A

Additional I/O Power Supply Unit.... 4-5
Additional NX Unit Power Supply Unit....4-4
applicable wires.... 5-42
attaching a terminal block....5-52

B

Basic System Configuration.... 1-6, 2-2
Battery....A-2
Battery connector.... 3-5
Battery Installation Procedure.... 5-28
Battery Replacement Procedure.... 7-6
Battery Service Life and Replacement Period....7-7
Battery slot....3-5
Battery-related Error Detection Setting....3-11
Block....4-23
built-in EtherCAT port....2-3, 3-5
Built-in EtherNet/IP port....3-5
built-in EtherNet/IP port 2.... 1-7
BUSY....3-7

C

Calculating the Effective Value.... 4-20
Cleaning.... 7-2
commercially available markers.... 5-18
Communications Cable.... 2-5, 2-6
Configuration Units....2-5, 2-6
connecting/removing wires.... 5-44
CPU Rack....2-4, 2-5
CPU Unit....3-2
crimping tool.... 5-43

D

Daisy chain....5-64, 5-66
DIN Track.... 5-12, 5-13, 5-15
DIN Track contact plate....3-5, 5-39
DIN Track Insulation Spacer....5-41
DIN Track mounting hooks.... 3-4
DIP switch....3-5

E

Earthing Methods.... 5-64
Electrical Specifications 3-2
End Cover.... 2-5, 3-5, 5-22
End Plate....5-12, 5-14, 5-23
Equipotential bonding system.... 5-64, 5-65
ERROR....3-7
EtherCAT Network Configuration.... 1-6, 2-3
Event log....5-5

F

Fail-safe Circuits....5-6
ferrules....5-42
Functional Grounding.... 5-68

G

Grounding....5-37, 5-64

I

I/O power supply.... 4-3, 4-24
I/O Power Supply Connection Unit....4-8
ID information indication....3-5, 3-12
inrush current....4-24
Installation Dimensions....5-32
Installation Height....5-34
Installation in Cabinets or Control Panels....5-8
Installation Locations for Protective Devices....4-26
Installation Method in Control Panels....5-10
Interlock Circuits....5-7

L

LINK/ACT.... 3-9
Lot number.... 3-12

M

MAC addresses....3-12
Maximum I/O Power Supply Current....4-16
Mechanical Specifications 3-2
Momentary Power Interruption.... 5-4

N

NET ERR....3-8
NET RUN....3-8
Network Configuration....1-7, 2-9
NX bus connector....3-4
NX Unit....2-5, 3-15
NX Unit configuration....2-4
NX Unit Power Supply Capacity....4-12

O

Operating environment....A-2
Operating Mode at Startup.... 5-3
Operating Procedure.... 1-15
Operation until Operation Ready Status....5-2
order of powering on....5-7
Overcurrent....4-25

P

Periodic Inspection Items.... 7-3
POWER....3-7

Power OFF Operation..... 5-3
power supply-related Unit.....4-4
Power Supply-related Unit.....3-14
preventing incorrect attachment of terminal blocks..... 5-52
Protective device..... 4-25

R

Recommended Power Supplies.....4-22, 4-24
Recommended screwdriver 5-45
removing a terminal block.....5-51
replacement battery.....7-6
Required Power Supply Capacity of the I/O Power Supply....
.....4-24
Required Power Supply Capacity of the Unit Power Supply..
.....4-22
restricted region.....21, 5-15
Restrictions on Inrush Current.....4-20
RUN.....3-7

S

Safe Mode..... 3-6
SD BUSY.....3-8
SD Memory Card..... 2-5, 2-6, 5-24
SD Memory Card connector.....3-4
SD Memory Card cover.....3-5
SD Memory Card power supply switch.....3-4
SD PWR..... 3-7
Securing Wires..... 5-47
Selecting Protective Device.....4-25
slider 3-4
solid wires.....5-45
special marker printer.....5-18
Star earthing.....5-64, 5-65
Startup.....3-7
supply from external source..... 4-14
supply from the NX bus..... 4-14
Support Software.....1-6, 1-8
Sysmac Studio.....3-17

T

The voltage drop in the I/O power supply.....4-15, 4-18
twisted wires.....5-45

U

Unit hookup guides.....3-4
Unit power supply.....4-22
Unit Version..... 3-12

W

Wiring Ducts..... 5-10
Wiring the Unit Power Supply.....5-36

X

X Bus connector..... 3-5
X Bus Unit..... 2-6, 3-16
X Bus Unit configuration.....2-2, 2-5

I

OMRON Corporation **Industrial Automation Company**

Kyoto, JAPAN **Contact : www.ia.omron.com**

Regional Headquarters

OMRON EUROPE B.V.
Wegalaan 67-69, 2132 JD Hoofddorp
The Netherlands
Tel: (31) 2356-81-300 Fax: (31) 2356-81-388

OMRON ELECTRONICS LLC
2895 Greenspoint Parkway, Suite 200
Hoffman Estates, IL 60169 U.S.A.
Tel: (1) 847-843-7900 Fax: (1) 847-843-7787

OMRON ASIA PACIFIC PTE. LTD.
438B Alexandra Road, #08-01/02 Alexandra
Technopark, Singapore 119968
Tel: (65) 6835-3011 Fax: (65) 6835-3011

OMRON (CHINA) CO., LTD.
Room 2211, Bank of China Tower,
200 Yin Cheng Zhong Road,
PuDong New Area, Shanghai, 200120, China
Tel: (86) 21-6023-0333 Fax: (86) 21-5037-2388

Authorized Distributor:

©OMRON Corporation 2023 All Rights Reserved.
In the interest of product improvement,
specifications are subject to change without notice.

Cat. No. W629-E1-02 0723