OMRON

Machine Automation Controller

NX-series

# PROFINET Coupler Unit

## User's Manual

NX-PNC202

NX-series
PROFINET
Coupler Unit

W623-E2-01

## NOTE

All rights reserved. No part of this publication may be reproduced, stored in a retrieval system, or transmitted, in any form, or by any means, mechanical, electronic, photocopying, recording, or otherwise, without the prior written permission of OMRON.

No patent liability is assumed with respect to the use of the information contained herein. Moreover, because OMRON is constantly striving to improve its high-quality products, the information contained in this manual is subject to change without notice. Every precaution has been taken in the preparation of this manual. Nevertheless, OMRON assumes no responsibility for errors or omissions. Neither is any liability assumed for damages resulting from the use of the information contained in this publication.

## Trademarks

- Sysmac and SYSMAC are trademarks or registered trademarks of OMRON Corporation in Japan and other countries for OMRON factory automation products.
- Microsoft, Windows, and Windows Vista are either registered trademarks or trademarks of Microsoft Corporation in the United States and other countries.
- EtherCAT® is registered trademark and patented technology, licensed by Beckhoff Automation GmbH, Germany.
- ODVA, CIP, CompoNet, DeviceNet, and EtherNet/IP are trademarks of ODVA.
- The SD and SDHC logos are trademarks of SD-3C, LLC.

Other company names and product names in this document are the trademarks or registered trademarks of their respective companies.

## Copyrights

Microsoft product screen shots used with permission from Microsoft.

# Introduction

Thank you for purchasing an NX-series PROFINET Coupler Unit.

This manual contains information that is necessary to use the NX-series PROFINET Coupler Unit. Please read this manual and make sure you understand the functionality and performance of the NX-series PROFINET Coupler Unit before you attempt to use it in a control system.

Keep this manual in a safe place where it will be available for reference during operation.

## Intended Audience

This manual is intended for the following personnel, who must also have knowledge of electrical systems (an electrical engineer or the equivalent).

- Personnel in charge of introducing FA systems.
- Personnel in charge of designing FA systems.
- Personnel in charge of installing and maintaining FA systems.
- Personnel in charge of managing FA systems and facilities.

For programming, this manual is intended for personnel who understand the programming language specifications in international standard IEC 61131-3 or Japanese standard JIS B 3503.

## Applicable Products

This manual covers the following product.

- NX-series PROFINET Coupler Unit

  NX-PNC202

# CONTENTS

**Introduction** ..... **1**
Intended Audience ..... 1
Applicable Products ..... 1

**CONTENTS** ..... **2**

**Manual Structure** ..... **8**
Page Structure and Icons ..... 8
Special Information ..... 9
Precaution on Terminology ..... 9

**Terms and Conditions Agreement** ..... **11**
Warranty, Limitations of Liability ..... 11
Application Considerations ..... 12
Disclaimers ..... 12

**Safety Precautions** ..... **13**
Definition of Precautionary Information ..... 13
Symbols ..... 13
Warnings ..... 14
Cautions ..... 15

**Precautions for Safe Use** ..... **16**

**Precautions for Correct Use** ..... **21**

**Regulations and Standards** ..... **22**
Conformance to EU Directives ..... 22
Conformance to UL and CSA Standards ..... 23
Conformance to KC Certification ..... 23
Software Licenses and Copyrights ..... 23

**Unit Versions** ..... **24**
Unit Versions ..... 24
Unit Versions and Sysmac Studio Versions ..... 26

**Related Manuals** ..... **27**

**Terminology** ..... **28**

**Revision History** ..... **29**

**Sections in this Manual** ..... **31**

## Section 1 PROFINET IO Technology

**1-1 Introduction to PROFINET** ..... **1-2**
**1-2 PROFINET Distributed IO** ..... **1-3**
**1-3 PROFINET communication Services** ..... **1-6**

## Section 2 Features and System Configuration

**2-1 Features of the PROFINET Coupler Unit** ..... **2-2**

**2-2 System Configurations of PROFINET Coupler Unit ..... 2-4**
2-2-1 System Configuration ..... 2-4
2-2-2 Types of NX Units ..... 2-6
**2-3 Sysmac Studio ..... 2-9**
2-3-1 Connection Method and Procedures ..... 2-9

## Section 3 Specifications and Application Procedures

**3-1 Specifications ..... 3-2**
3-1-1 General Specifications of PROFINET IO Device Terminals ..... 3-2
3-1-2 PROFINET Specifications ..... 3-3
3-1-3 PROFINET Coupler Unit Specifications ..... 3-4
3-1-4 End Cover Specifications ..... 3-6
**3-2 Procedures ..... 3-7**
3-2-1 PROFINET IO Device Terminal Application Procedures ..... 3-7
3-2-2 Details ..... 3-9

## Section 4 Part Names and Functions

**4-1 Parts and Names ..... 4-2**
4-1-1 PROFINET Coupler Unit ..... 4-2
4-1-2 NX Units ..... 4-3
4-1-3 End Cover ..... 4-4
**4-2 Indicators ..... 4-5**
**4-3 Hardware Switch Settings ..... 4-8**
**4-4 Communications Connector and Peripheral USB Port ..... 4-9**
**4-5 Terminal Blocks ..... 4-10**
**4-6 DIN Track Contact Plate ..... 4-12**

## Section 5 Designing the Power Supply System

**5-1 Power Supply System and Design Concepts ..... 5-2**
5-1-1 Power Supply System and Types of Power Supplies ..... 5-2
5-1-2 NX-series Power Supply-related Units ..... 5-3
5-1-3 Design Concepts for Power Supply to the PROFINET IO Device Terminal ..... 5-5
**5-2 Designing the NX Unit Power Supply System ..... 5-6**
5-2-1 Procedure for Designing the NX Unit Power Supply System ..... 5-6
5-2-2 Calculation Example for the NX Unit Power Supply ..... 5-7
**5-3 Designing the IO Power Supply System ..... 5-9**
5-3-1 IO Power Supply Method ..... 5-9
5-3-2 Designing the IO Power Supply from the NX Bus ..... 5-10
5-3-3 Designing the IO Power Supply from External Sources ..... 5-14
5-3-4 Restrictions on Inrush Current for ON/OFF Operation ..... 5-14
**5-4 Selecting External Power Supplies and Protective Devices ..... 5-16**
5-4-1 Selecting the Unit Power Supply ..... 5-16
5-4-2 Selecting the IO Power Supplies ..... 5-18
5-4-3 Selecting Protective Devices ..... 5-18

## Section 6 Installation

**6-1 Installing Units ..... 6-2**
6-1-1 Installation Precautions ..... 6-2
6-1-2 Preparations for Installation ..... 6-6

6-1-3 Installation Orientation ..... 6-8
6-1-4 Installing the PROFINET Coupler Unit ..... 6-9
6-1-5 Installing and Connecting NX Units ..... 6-12
6-1-6 Mounting the End Cover ..... 6-15
6-1-7 Mounting the End Plates ..... 6-16
6-1-8 Attaching Markers ..... 6-17
6-1-9 Removing Units ..... 6-18
6-1-10 Assembled Appearance and Dimensions ..... 6-20

**6-2 Control Panel Installation ..... 6-23**
6-2-1 Temperature ..... 6-23
6-2-2 Humidity ..... 6-25
6-2-3 Vibration and Shock ..... 6-25
6-2-4 Atmosphere ..... 6-25
6-2-5 Electrical Environment ..... 6-25
6-2-6 Grounding ..... 6-30

## Section 7 Wiring

**7-1 PROFINET Network Wiring ..... 7-2**
7-1-1 Installation Precautions ..... 7-2
7-1-2 Preparations for Installation ..... 7-2
7-1-3 Pin Arrangement of Communications Connectors on the PROFINET Coupler Unit ..... 7-3
7-1-4 Connecting Communications Cables and Connectors ..... 7-4
7-1-5 Connecting Communications Cables ..... 7-4

**7-2 Connecting the Power Supply and Ground Wires ..... 7-6**
7-2-1 Wiring the PROFINET Coupler Unit ..... 7-6
7-2-2 Wiring the Power Supply to the PROFINET IO Device Terminal ..... 7-7
7-2-3 Grounding the PROFINET IO Device Terminal ..... 7-7
7-2-4 Precautions for Wiring the PROFINET IO Device Terminal Together with Computers and other Peripheral Devices ..... 7-11
7-2-5 Wiring to the Screwless Clamping Terminal Block ..... 7-11

**7-3 Connecting USB Cable ..... 7-26**

**7-4 Wiring External Signal Lines ..... 7-28**

## Section 8 PROFINET Communications

**8-1 Communication protocols ..... 8-2**
8-1-1 **RT and IRT ..... 8-2**

## Section 9 Setting Up the PROFINET Coupler Unit

**9-1 Settings and Setting Procedures ..... 9-2**
9-1-1 Items to Set ..... 9-2
9-1-2 IO Device Terminal Parameters ..... 9-4
9-1-3 Setting Procedures ..... 9-4

**9-2 Setting IO Device Terminal Parameters ..... 9-5**
9-2-1 Items to Set ..... 9-5
9-2-2 Setting the NX Unit Configuration Information ..... 9-5
9-2-3 Unit Operation Settings ..... 9-10
9-2-4 Unit Application Data ..... 9-11
9-2-5 Sysmac Studio Functions Used as Required ..... 9-12

**9-3 Transferring and Comparing Settings ..... 9-16**
9-3-1 Transferring IO Device Terminal Setting Information through the USB Port on the PROFINET Coupler Unit ..... 9-16
9-3-2 Comparing Settings ..... 9-18

**9-4 Setting PROFINET IO Device Name ..... 9-19**

**9-5 Setting PROFINET IO Data ..... 9-20**
9-5-1 IO Allocation ..... 9-20
9-5-2 Parameter Settings of the PROFINET Coupler Unit ..... 9-26

**9-6 NX Unit IO Allocation ..... 9-27**
9-6-1 Basic IO Mapping ..... 9-27
9-6-2 Sysmac Studio IO Allocation Functions ..... 9-29
9-6-3 Endian ..... 9-30

## Section 10 I/O Refreshing

**10-1 Introduction to I/O Refreshing for PROFINET IO Devices ..... 10-2**

**10-2 Communications Performance ..... 10-3**
10-2-1 I/O Response Time ..... 10-3

## Section 11 PROFINET Coupler Unit Functions

**11-1 Functions ..... 11-3**

**11-2 NX Unit Mounting Settings ..... 11-4**
11-2-1 Introduction ..... 11-4
11-2-2 Applications ..... 11-5
11-2-3 Operating Specifications for NX Units That Are Set as Unmounted Units ..... 11-5
11-2-4 Setting NX Units as Unmounted Units ..... 11-6

**11-3 Event Logs ..... 11-8**
11-3-1 Introduction ..... 11-8
11-3-2 Detailed Information on Event Logs ..... 11-9
11-3-3 Reading Event Logs ..... 11-11
11-3-4 Clearing Event Logs ..... 11-13
11-3-5 Exporting the Event Log ..... 11-15

**11-4 Clearing All Memory ..... 11-16**
11-4-1 Introduction ..... 11-16
11-4-2 Details on Clearing All Memory ..... 11-16
11-4-3 Procedure for Clearing All Memory ..... 11-18

**11-5 Restarting ..... 11-22**
11-5-1 Introduction ..... 11-22
11-5-2 Details on Restarting ..... 11-22
11-5-3 Procedure for Restarting ..... 11-23

**11-6 Changing Event Levels ..... 11-24**
11-6-1 Introduction ..... 11-24
11-6-2 Details on Changing Event Levels ..... 11-24
11-6-3 Procedure to Change an Event Level ..... 11-25

**11-7 Fail-soft Operation ..... 11-27**
11-7-1 Overview ..... 11-27
11-7-2 Application ..... 11-28
11-7-3 Details on Fail-soft Operation ..... 11-28

**11-8 Monitoring Total Power-ON Time ..... 11-30**
11-8-1 Overview ..... 11-30
11-8-2 Details on Monitoring Total Power-ON Times ..... 11-30
11-8-3 Checking Total Power-ON Times ..... 11-30

**11-9 Ethernet Switch Functions ..... 11-31**

## Section 12 Troubleshooting

**12-1 How to Check for Errors ..... 12-2**

**12-2 Checking for Errors and Troubleshooting with the Indicators ..... 12-3**

12-2-1 Checking for Errors and Troubleshooting with the Indicators on the PROFINET Coupler Unit ..... 12-3
12-2-2 Checking for Errors and Troubleshooting with the Indicators on the NX Units ..... 12-8

**12-3 Checking for Errors and Troubleshooting with Sysmac Studio ..... 12-9**
12-3-1 Checking Status with the PROFINET Network ..... 12-9
12-3-2 Checking for Errors from the Sysmac Studio ..... 12-10
12-3-3 Checking for Errors from Support Software Other Than the Sysmac Studio ..... 12-10
12-3-4 Event Codes for Errors and Troubleshooting Procedures ..... 12-11

**12-4 Resetting Errors ..... 12-32**
12-4-1 Procedure to Reset Errors ..... 12-32

**12-5 Troubleshooting Other Errors ..... 12-35**

## Section 13 Maintenance and Inspection

**13-1 Cleaning and Maintenance ..... 13-2**
13-1-1 Cleaning ..... 13-2
13-1-2 Periodic Inspections ..... 13-2

**13-2 Maintenance Procedures ..... 13-4**
13-2-1 Importing and Exporting Data ..... 13-4
13-2-2 Replacement Procedure for the PROFINET Coupler Unit ..... 13-5
13-2-3 Basic Replacement Procedure for NX Units ..... 13-6
13-2-4 Using Settings from NX Units on Other Coupler Units ..... 13-7

## Appendices

**A-1 Dimensions ..... A-2**
A-1-1 PROFINET Coupler Unit ..... A-2
A-1-2 End Cover ..... A-3

**A-2 Terminal Block Model Numbers ..... A-4**
A-2-1 Model Number Notation ..... A-4
A-2-2 Models ..... A-5

## Index

# Manual Structure

## Page Structure and Icons

The following page structure and icons are used in this manual.

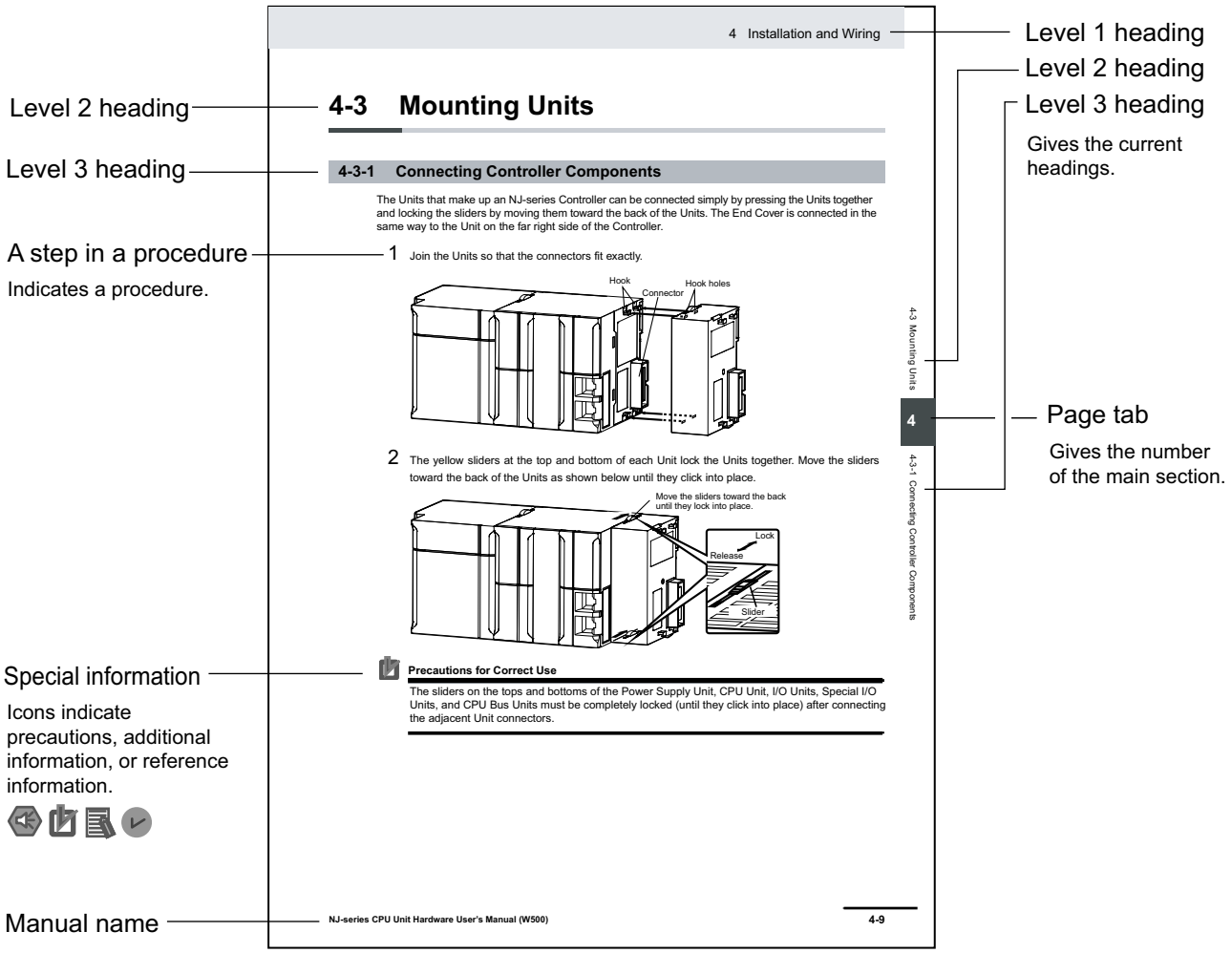


Note This illustration is provided only as a sample. It may not literally appear in this manual.

## Special Information

Special information in this manual is classified as follows:

**Precautions for Safe Use**

Precautions on what to do and what not to do to ensure safe usage of the product.

**Precautions for Correct Use**

Precautions on what to do and what not to do to ensure proper operation and performance.

**Additional Information**

Additional information to read as required.

This information is provided to increase understanding or make operation easier.

**Version Information**

Information on differences in specifications and functionality for CPU Units, Industrial PCs, and Communications Coupler Units with different unit versions and for different versions of the Sysmac Studio is given.

Note References are provided to more detailed or related information.

## Precaution on Terminology

- In this manual, “download” refers to transferring data from the Sysmac Studio to a physical device and “upload” refers to transferring data from a physical device to the Sysmac Studio.
- In this manual, the directions in relation to the Units are given in the following figure, which shows upright installation.

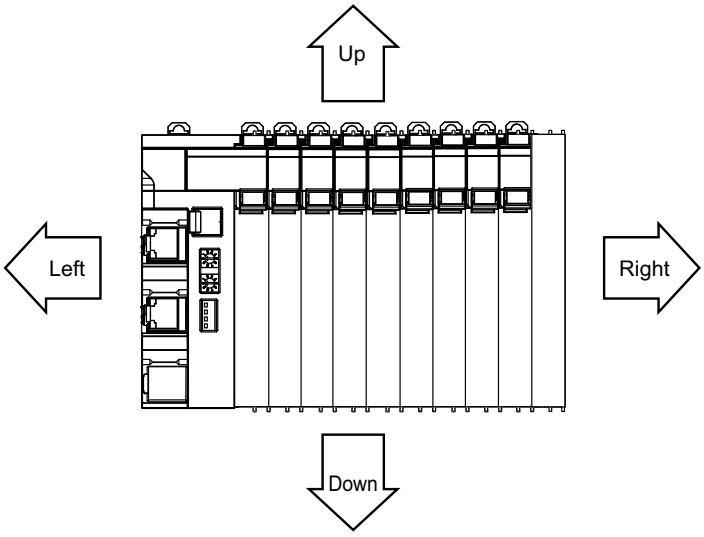

# Terms and Conditions Agreement

## Warranty, Limitations of Liability

### Warranties

#### Exclusive Warranty

Omron's exclusive warranty is that the Products will be free from defects in materials and workmanship for a period of twelve months from the date of sale by Omron (or such other period expressed in writing by Omron). Omron disclaims all other warranties, express or implied.

#### Limitations

OMRON MAKES NO WARRANTY OR REPRESENTATION, EXPRESS OR IMPLIED, ABOUT NON-INFRINGEMENT, MERCHANTABILITY OR FITNESS FOR A PARTICULAR PURPOSE OF THE PRODUCTS. BUYER ACKNOWLEDGES THAT IT ALONE HAS DETERMINED THAT THE PRODUCTS WILL SUITABLY MEET THE REQUIREMENTS OF THEIR INTENDED USE.

Omron further disclaims all warranties and responsibility of any type for claims or expenses based on infringement by the Products or otherwise of any intellectual property right.

#### Buyer Remedy

Omron's sole obligation hereunder shall be, at Omron's election, to (i) replace (in the form originally shipped with Buyer responsible for labor charges for removal or replacement thereof) the non-complying Product, (ii) repair the non-complying Product, or (iii) repay or credit Buyer an amount equal to the purchase price of the non-complying Product; provided that in no event shall Omron be responsible for warranty, repair, indemnity or any other claims or expenses regarding the Products unless Omron's analysis confirms that the Products were properly handled, stored, installed and maintained and not subject to contamination, abuse, misuse or inappropriate modification. Return of any Products by Buyer must be approved in writing by Omron before shipment. Omron Companies shall not be liable for the suitability or unsuitability or the results from the use of Products in combination with any electrical or electronic components, circuits, system assemblies or any other materials or substances or environments. Any advice, recommendations or information given orally or in writing, are not to be construed as an amendment or addition to the above warranty.

See http://www.omron.com/global/ or contact your Omron representative for published information.

### Limitation on Liability; Etc

OMRON COMPANIES SHALL NOT BE LIABLE FOR SPECIAL, INDIRECT, INCIDENTAL, OR CONSEQUENTIAL DAMAGES, LOSS OF PROFITS OR PRODUCTION OR COMMERCIAL LOSS IN ANY WAY CONNECTED WITH THE PRODUCTS, WHETHER SUCH CLAIM IS BASED IN CONTRACT, WARRANTY, NEGLIGENCE OR STRICT LIABILITY.

Further, in no event shall liability of Omron Companies exceed the individual price of the Product on which liability is asserted.

## Application Considerations

### Suitability of Use

Omron Companies shall not be responsible for conformity with any standards, codes or regulations which apply to the combination of the Product in the Buyer's application or use of the Product. At Buyer's request, Omron will provide applicable third party certification documents identifying ratings and limitations of use which apply to the Product. This information by itself is not sufficient for a complete determination of the suitability of the Product in combination with the end product, machine, system, or other application or use. Buyer shall be solely responsible for determining appropriateness of the particular Product with respect to Buyer's application, product or system. Buyer shall take application responsibility in all cases.

NEVER USE THE PRODUCT FOR AN APPLICATION INVOLVING SERIOUS RISK TO LIFE OR PROPERTY OR IN LARGE QUANTITIES WITHOUT ENSURING THAT THE SYSTEM AS A WHOLE HAS BEEN DESIGNED TO ADDRESS THE RISKS, AND THAT THE OMRON PRODUCT(S) IS PROPERLY RATED AND INSTALLED FOR THE INTENDED USE WITHIN THE OVERALL EQUIPMENT OR SYSTEM.

### Programmable Products

Omron Companies shall not be responsible for the user's programming of a programmable Product, or any consequence thereof.

## Disclaimers

### Performance Data

Data presented in Omron Company websites, catalogs and other materials is provided as a guide for the user in determining suitability and does not constitute a warranty. It may represent the result of Omron's test conditions, and the user must correlate it to actual application requirements. Actual performance is subject to the Omron's Warranty and Limitations of Liability.

### Change in Specifications

Product specifications and accessories may be changed at any time based on improvements and other reasons. It is our practice to change part numbers when published ratings or features are changed, or when significant construction changes are made. However, some specifications of the Product may be changed without any notice. When in doubt, special part numbers may be assigned to fix or establish key specifications for your application. Please consult with your Omron's representative at any time to confirm actual specifications of purchased Product.

### Errors and Omissions

Information presented by Omron Companies has been checked and is believed to be accurate; however, no responsibility is assumed for clerical, typographical or proofreading errors or omissions.

# Safety Precautions

## Definition of Precautionary Information

The following notation is used in this manual to provide precautions required to ensure safe usage of an NX-series PROFINET Coupler Unit.

The safety precautions that are provided are extremely important to safety. Always read and heed the information provided in all safety precautions.

The following notation is used.

| | |
|---|---|
| **WARNING** | Indicates a potentially hazardous situation which, if not avoided, could result in death or serious injury. Additionally, there may be severe property damage. |
| **Caution** | Indicates a potentially hazardous situation which, if not avoided, may result in minor or moderate injury, or property damage. |

## Symbols

| | |
|---|---|
| | The circle and slash symbol indicates operations that you must not do.<br>The specific operation is shown in the circle and explained in text.<br>This example indicates prohibiting disassembly. |
| | The triangle symbol indicates precautions (including warnings).<br>The specific operation is shown in the triangle and explained in text.<br>This example indicates a precaution for electric shock. |
| | The triangle symbol indicates precautions (including warnings).<br>The specific operation is shown in the triangle and explained in text.<br>This example indicates a general precaution. |
| | The filled circle symbol indicates operations that you must do.<br>The specific operation is shown in the circle and explained in text.<br>This example shows a general precaution for something that you must do. |

## Warnings

# ⚠ WARNING

### During Power Supply

Do not touch the terminal section while power is ON.

Electric shock may occur.

Do not attempt to take any Unit apart.

In particular, high-voltage parts are present in Units that supply power while power is supplied or immediately after power is turned OFF. Touching any of these parts may result in electric shock. There are sharp parts inside the Unit that may cause injury.

### Fail-safe Measures

Provide safety measures in external circuits to ensure safety in the system if an abnormality occurs due to malfunction of the CPU Unit, Industrial PCs, other Units, or PROFINET IO Device or due to other external factors affecting operation.

Not doing so may result in serious accidents due to incorrect operation.

Emergency stop circuits, interlock circuits, limit circuits, and similar safety measures must be provided in external control circuits.

The CPU Unit or Industrial PCs will turn OFF all outputs from Output Units in the following cases. The remote IO Devices will operate according to the settings in the IO Devices.

- If a power supply error occurs.
- If the power supply connection becomes faulty.
- If a CPU watchdog timer error or CPU reset occurs.
- If a Controller error in the major fault level occurs.
- While the CPU Unit is on standby until RUN mode is entered after the power is turned ON

External safety measures must be provided to ensure safe operation of the system in such cases.

The outputs may remain ON or OFF due to deposition or burning of the output relays or destruction of the output transistors. As a countermeasure for such problems, external safety measures must be provided to ensure safe operation of the system.

If external power supplies for IO Devices or other devices are overloaded or short-circuited, the voltage will drop, outputs will turn OFF, and the system may be unable to read inputs. Provide external safety measures in control with monitoring of external power supply voltage as required so that the system operates safely in such a case.

You must take fail-safe measures to ensure safety in the event of incorrect, missing, or abnormal signals caused by broken signal lines, momentary power interruptions, or other causes.

Not doing so may result in serious accidents due to incorrect operation.

## Voltage and Current Inputs

Make sure that the voltages and currents that are input to the Units and IO Devices are within the specified ranges.

Inputting voltages or currents that are outside of the specified ranges may cause accidents or fire.

## Transferring

Always confirm safety at the destination node before you transfer Unit configuration information, parameters, settings, or other data from tools such as the Sysmac Studio.

The devices or machines may operate unexpectedly, regardless of the operating mode of the Controller.

# Cautions

# Caution

## Wiring

When you connect a computer or other peripheral device to a Communications Coupler Unit that has a non-isolated DC power supply, either ground the 0-V side of the external power supply (i.e. Unit power supply) or do not ground it at all.

If the peripheral devices are grounded incorrectly, the external power supply (i.e. Unit power supply) may be short-circuited.

Never ground the 24-V side of the power supply, as shown in the following figure.

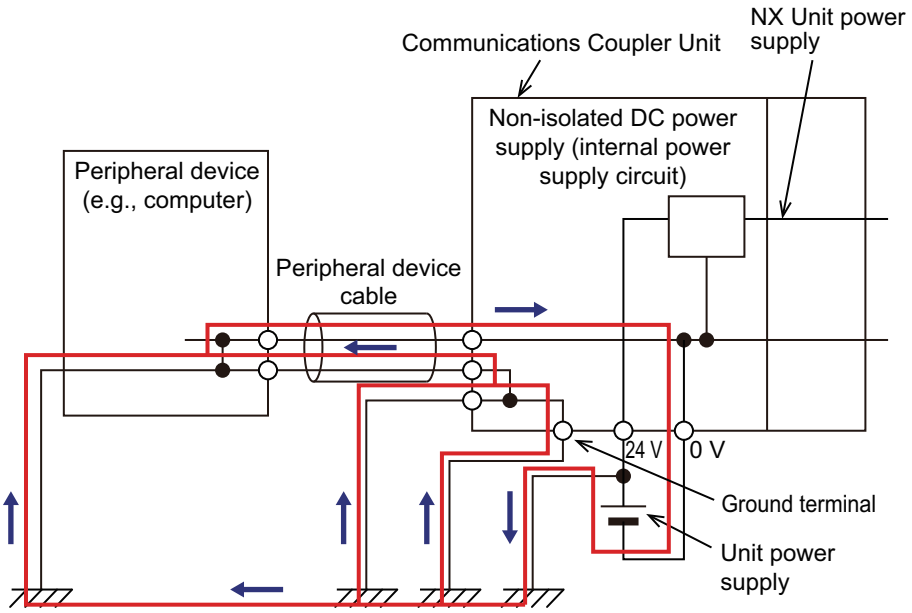


Be sure that all terminal screws and cable connector screws are tightened to the torque specified in the relevant manuals. The loose screws may result in fire or malfunction.

# Precautions for Safe Use

## Transporting

- When transporting any Unit, use the special packing box for it.
  Also, do not subject the Unit to excessive vibration or shock during transportation.
- Do not drop any Unit or subject it to abnormal vibration or shock.
  Doing so may result in Unit malfunction or burning.

## Mounting

- Mount terminal blocks and connectors only after checking the mounting location carefully.
- Be sure that the terminal blocks, expansion cables, and other items with locking devices are properly locked into place.

## Installation

- Always turn OFF the power supply before installing the Unit. If the power supply is not OFF, the Unit may malfunction or may be damaged.
- Always turn OFF the Unit power supply and IO power supply before you remove the NX Unit.
- Do not apply labels or tape to the Unit. When the Unit is installed or removed, adhesive or scraps may adhere to the pins in the NX bus connector, which may result in malfunctions.
- Do not touch the pins in the NX bus connector on the Unit. Dirt may adhere to the pins in the NX bus connector, which may result in malfunctions.

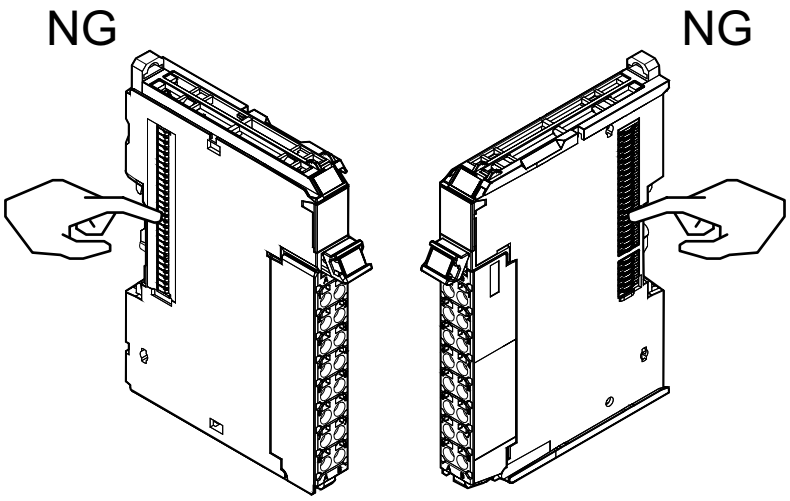


Example: NX Unit (12 mm width)

- Do not write on the Communications Coupler Unit or an NX Unit with ink within the restricted region that is shown in the following figure. Also do not get this area dirty. When the Unit is installed or removed, ink or dirt may adhere to the pins in the NX bus connector, which may result in malfunctions in the IO Device Terminal.

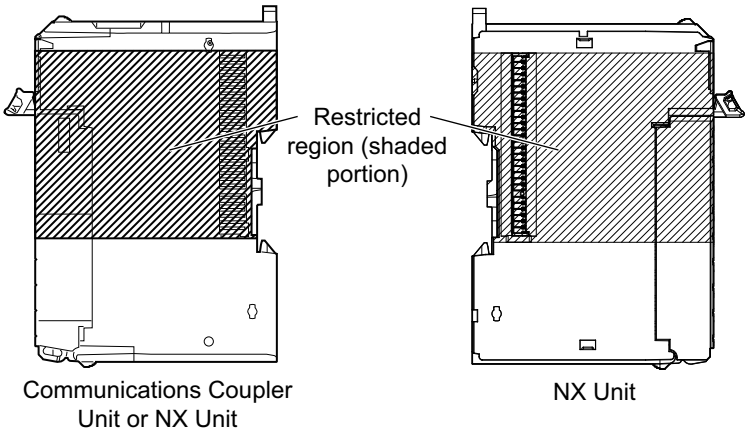


- For the installation orientations in the following figure, support the cables, e.g., with a duct, so that the End Plate on the bottom is not subjected to the weight of the cables. The weight of the cables may cause the bottom End Plate to slide downward so that the IO Device Terminal is no longer secured to the DIN Track, which may result in malfunctions.

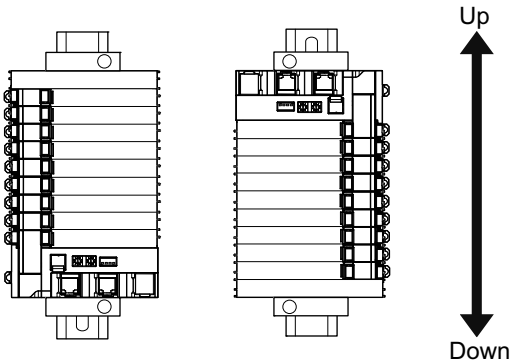


## Wiring

- Double-check all switches and other settings and double-check all wiring to make sure that they are correct before turning ON the power supply.
  Use the correct wiring parts and tools when you wire the system.
- Do not pull on the cables or bend the cables beyond their natural limit. Also, do not place heavy objects on top of the cables or other wiring lines. Doing so may break the cable.
- When wiring or installing the Units, do not allow metal fragments to enter the Units.
- Do not press the flat-blade screwdriver straight into the release holes on a screwless clamping terminal block. Doing so may damage the terminal block.

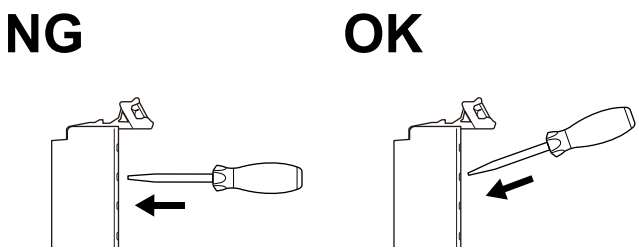


- When you insert a flat-blade screwdriver into a release hole on a screwless clamping terminal block, press it down with a force of 30N or less. Applying excessive force may damage the terminal block.

- Do not incline or twist the flat-blade screwdriver while it is in a release hole on a screwless clamping terminal block. Doing so may damage the terminal block.

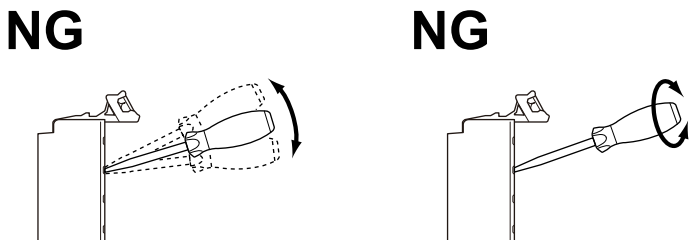


## Power Supply Design

- Use all Units within the IO power supply ranges that are given in the specifications.
- Supply sufficient power according to the contents of this manual.
- Use the power supply voltage that is specified in this manual.
- Do not apply voltages that exceed the rated value to any Input Unit.
- Do not apply voltages or connect loads to the Output Units or IO Devices in excess of the maximum ratings.
- Inrush current occurs when the power supply is turned ON. When selecting fuses or breakers for external circuits, consider their fusing and detection characteristics as well as the above precautions and allow sufficient margin in shut-off performance.
- Install external breakers and take other safety measures against short-circuiting and overcurrents in external wiring.

## Turning ON the Power Supply

- When you set the Operating Mode at Startup, confirm that no adverse effect will occur in the system.

## Actual Operation

- Before you start operation, always register the NX Units that are connected to the Communications Coupler Unit in the host communications IO Controller as the Unit configuration information.
- Check the user program, data, and parameter settings for proper execution before you use them for actual operation.
- If you change the fail-soft operation setting, the output status when the error occurs may also change. Confirm safety before you change the fail-soft operation setting.
- If you use fail-soft operation, write programming to determine whether Unit IO data is valid. Without such programming, the user program cannot distinguish between Units for which IO refreshing is continued and Units for which IO refreshing is stopped.

## Turning OFF the Power Supply

- Do not disconnect the cable or turn OFF the power supply to the Controller or an IO Device Terminal when downloading data or the user program from the Sysmac Studio.
- Always turn OFF the external power supply to the Units before attempting any of the following.

  Mounting or removing an NX Unit, Communications Coupler Unit, CPU Unit, or Industrial PC
  Assembling Units
  Setting DIP switches or rotary switches
  Connecting or wiring cables
  Attaching or removing terminal blocks or connectors

Units that supply power continue to supply power to the Units for up to several seconds after the power supply is turned OFF. The PWR indicator remains lit as long as power is supplied. Confirm that the PWR indicator is not lit before you perform any of the above.

## Operation

- Confirm that the controlled system will not be adversely affected before you perform any of the following operations.

  Changing the operating mode of the CPU Unit or Industrial PC (including changing the setting of the Operating Mode at Startup)
  Changing the user program or settings
  Changing set values or present values
  Forced refreshing
- Always sufficiently check the safety at the connected devices before you change the settings of an IO Device or Unit.

## PROFINET Communications

- Make sure that the communications distance, number of nodes connected, and method of connection for PROFINET are within specifications.
  Do not connect PROFINET Coupler Units to an EtherCAT network.
- Malfunctions or unexpected operation may occur for some combinations of PROFINET revisions of the IO Controller and IO Devices. If you disable the revision check in the network settings, check the PROFINET IO Device revision settings in the IO Controller and the actual IO Device revisions, and then make sure that functionality is compatible in the manuals or other references. You can check the IO Device versions in the settings from the Sysmac Studio and you can check the actual IO Device revisions from the Sysmac Studio or on IO Device nameplates.
- After you transfer the user program, the CPU Unit is restarted and communications with the Profinet IO Devices are cut off. During that period, the IO Device outputs behave according to the IO Device settings.
  The time that communications are cut off depends on the PROFINET network configuration.
  Before you transfer the user program, confirm that the system will not be adversely affected.
- PROFINET communications are not always established immediately after the power supply is turned ON. Use the IO Device terminal status bits in the user program to confirm that communications are established before attempting control operations.
- If frames sent to Profinet IO Devices are lost due to noise or other causes, IO Device IO data is not communicated, and the intended operation is sometimes not achieved. Perform the following processing if noise countermeasures are necessary.
  Program the IO Device Terminal Status and/or Unit status bits as an interlock condition in the user program.
  Refer to the third party IO Controller Manual for details.
- When a Profinet IO Device is disconnected, communications will stop and control of the outputs will be lost not only for the disconnected IO Device, but for all IO Devices connected after it. Confirm that the system will not be adversely affected before you disconnect an IO Device.
- If you disconnect the cable from a Profinet IO Device to disconnect it from the network, any current communications frames will be lost. If communication frames are lost, then the IO Device data is not communicated, and the intended operation is not achieved. Perform the following processing for an IO Device that needs to be replaced.

  Program the IO Device Terminal Status and/or Unit status CIO bits as an interlock condition in the user program.
- All PROFINET communications shall be contained in a separate network from general networks to prevent unintended PROFINET communication failures.

## Unit Replacement

- When you replace a Unit, start operation only after you transfer the settings and variables that are required for operation to the new Unit.

## Disposal

- Dispose of the product according to local ordinances as they apply.
- Dispose of the product and batteries according to local ordinances as they apply.

- Dispose in accordance with applicable regulations.

# Precautions for Correct Use

## Storage, Mounting and Wiring

- Follow the instructions in this manual to correctly perform installation and wiring.
- Do not operate or store the Units in the following locations. Doing so may result in malfunction, in operation stopping, or in burning.

  Locations subject to direct sunlight
  Locations subject to temperatures or humidity outside the range specified in the specifications
  Locations subject to condensation as the result of severe changes in temperature
  Locations subject to corrosive or flammable gases
  Locations subject to dust (especially iron dust) or salts
  Locations subject to exposure to water, oil, or chemicals
  Locations subject to shock or vibration
- Take appropriate and sufficient countermeasures during installation in the following locations.

  Locations subject to strong, high-frequency noise
  Locations subject to static electricity or other forms of noise
  Locations subject to strong electromagnetic fields
  Locations subject to possible exposure to radioactivity
  Locations close to power lines
- Before touching a Unit, be sure to first touch a grounded metallic object in order to discharge any static build-up.
- Use the rated power supply voltage for the Units that supply power. Take appropriate measures to ensure that the specified power with the rated voltage and frequency is supplied in places where the power supply is unstable.
- Install the Units away from sources of heat and ensure proper ventilation. Not doing so may result in malfunction, in operation stopping, or in burning.
- Do not allow foreign matter to enter the openings in the Unit. Doing so may result in Unit burning, electric shock, or failure.
- Use the PROFINET connection methods and applicable cables that are specified in this manual. Otherwise, communications may be faulty.

## Actual Operation

- If you change the event level of an error, the output status when the error occurs may also change. Confirm safety before you change an event level.

## Turning OFF the Power Supply

- Do not turn OFF the power supply while data is being transferred.
- Do not turn OFF the power supply while parameters are being written to the Communications Coupler Unit or NX Units.

## PROFINET Communications

Do not disconnect the PROFINET communications cables during operation. The outputs will become unstable.

# Regulations and Standards

## Conformance to EU Directives

### Applicable Directives

- EMC Directives
- Low Voltage Directive

### Concepts

#### EMC Directives

OMRON devices that comply with EC Directives also conform to the related EMC standards so that they can be more easily built into other devices or the overall machine. The actual products have been checked for conformity to EMC standards.*1

Whether the products conform to the standards in the system used by the customer, however, must be checked by the customer. EMC-related performance of the OMRON devices that comply with EU Directives will vary depending on the configuration, wiring, and other conditions of the equipment or control panel on which the OMRON devices are installed. The customer must, therefore, perform the final check to confirm that devices and the overall machine conform to EMC standards.

*1. Applicable EMC (Electromagnetic Compatibility) standards are as follows:
EMS (Electromagnetic Susceptibility): EN 61131-2
EMI (Electromagnetic Interference): EN 61131-2 (Radiated emission: 10-m regulations).

#### Low Voltage Directive

Always ensure that devices operating at voltages of 50 to 1,000 VAC and 75 to 1,500 VDC meet the required safety standards. The applicable directive is EN 61131-2.

#### Conformance to EU Directives

The NX-series Units comply with EU Directives. To ensure that the machine or device in which the NX-series Units are used complies with EU Directives, the following precautions must be observed.

- The NX-series Units must be installed within a control panel.
- You must use SELV power supply for the DC power supplies that are connected as the Unit power supplies and IO power supplies for the NX-series Units.

  We recommend that you use the OMRON S8JX-series Power Supplies. EMC standard compliance was confirmed for the recommended Power Supplies.
- NX-series Units that comply with EU Directives also conform to the Common Emission Standard (EN 61131-2). Radiated emission characteristics (10-m regulations) may vary depending on the configuration of the control panel used, other devices connected to the control panel, wiring, and other conditions.

  You must therefore confirm that the overall machine or equipment in which the NX-series Units are used complies with EU Directives.
- You must use power supplies with an output hold time of 10 ms or longer for the DC power supplies that are connected as the Unit power supplies and IO power supplies for the NX-series Units.
- This is a Class A product (for industrial environments). In a residential environment, it may cause radio interference. If radio interference occurs, the user may be required to take appropriate measures.

## Conformance to UL and CSA Standards

Some NX-series products comply with UL and CSA standards. If you use an NX-series product that complies with UL or CSA standards and the machinery or system in which you use the NX-series product must also comply with the standards, refer to the *Instruction Sheet* that is provided with the product. The *Instruction Sheet* provides the application conditions for complying with the standards.

## Conformance to KC Certification

Observe the following precaution if you use NX-series Units in Korea.

A급 기기 (업무용 방송통신기자재)
이 기기는 업무용(A급) 전자파적합기기로서 판매자
또는 사용자는 이 점을 주의하시기 바라며, 가정외의
지역에서 사용하는 것을 목적으로 합니다.

Class A Device (Broadcasting Communications Device for Office Use)

This device obtained EMC registration for office use (Class A), and it is intended to be used in places other than homes.

Sellers and/or users need to take note of this.

## Software Licenses and Copyrights

This product incorporates certain third party software. The license and copyright information associated with this software is available at https://industrial.omron.eu/en/products/NX-PNC202#software.

# Unit Versions

This section describes the notation that is used for unit versions, the confirmation method for unit versions, and the relationship between unit versions and Sysmac Studio versions.

## Unit Versions

A “unit version” has been introduced to manage the Units in the NX Series according to differences in functionality accompanying Unit upgrades.

### Notation of Unit Versions on Products

The unit version is given with the Unit specifications on the side of the Unit or in the notched area.

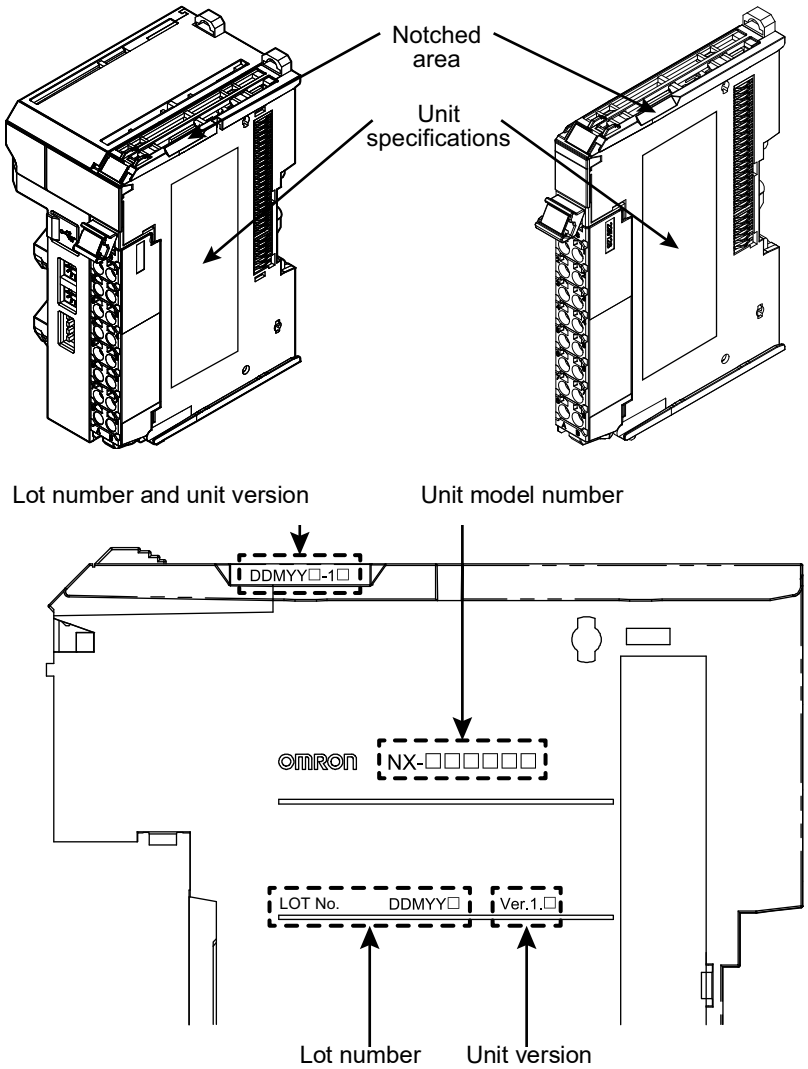


The following information is provided in the Unit specifications on the Unit.

| Name | Function |
|---|---|
| Unit model number | Gives the model of the Unit. |
| Unit version | Gives the unit version of the Unit. |
| Lot number | Gives the lot number of the Unit.<br>DDMYY□: Lot number, □: Used by OMRON.<br>“M” gives the month (1 to 9: January to September, X: October, Y: November, Z: December) |

The following information is provided in the notched area on the Unit.

| Name | Function |
|---|---|
| Lot number and unit version | Gives the lot number and unit version of the Unit.<br>• DDMYY□: Lot number, □: Used by OMRON.<br>“M” gives the month (1 to 9: January to September, X: October, Y: November, Z: December)<br>• 1□: Unit version<br>The decimal portion of the unit version is omitted. (It is provided in the Unit specifications.) |

## Confirming Unit Versions with the Sysmac Studio

You can use Sysmac Studio to check unit versions. The confirmation method depends on the Sysmac Studio.

### ● Checking Unit Versions with the Sysmac Studio

You can use the Production Information on the Sysmac Studio to check the unit versions of PROFINET Coupler Unit and NX Units.

**1** Select ***Configurations and Setup*** in the Multiview Explorer and then select ***PROFINET***. Double-click the PROFINET Coupler Unit under **PROFINET**. Or, right-click the PROFINET Coupler Unit and select ***Edit*** from the menu.

The Edit IO Device Terminal Configuration Tab Page is displayed.

You can also display the Edit IO Device Terminal Configuration Tab Page with any of the following operations.

Double-click **PROFINET** under **Configurations and Setup** in the Multiview Explorer, right-click the PROFINET Coupler Unit in the PROFINET Configuration Edit Tab Page, and select ***Edit IO Device Terminal Configuration***.

Or, select the PROFINET Coupler Unit on the PROFINET Configuration Edit Tab Page, and then click the **Edit IO Device Terminal Configuration** button.

**2** Go online.

**3** Right-click the PROFINET Coupler Unit and select ***Display Production Information*** from the menu.

The Production Information Dialog Box is displayed.

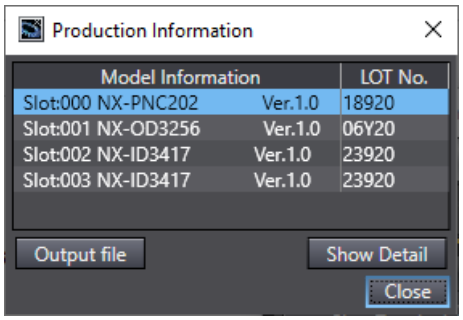


Simple Display

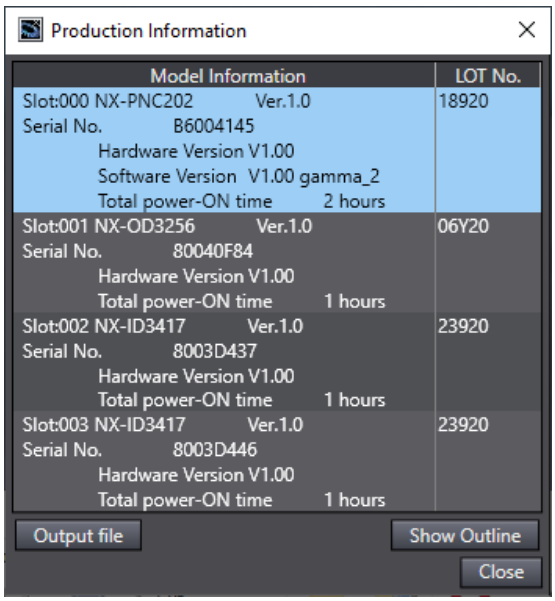


Detailed Display

The unit version is displayed on the right of the Unit model. The unit version is 1.0 in the example above.

The following items are displayed except the unit version.

- Slot number
- Unit model number
- Serial number
- Lot number
- Hardware version
- Software version
- Total power-ON time

The software version is displayed only for Units that contain software.

### ● Checking Unit Versions with Support Software Other Than the Sysmac Studio

You can use Support Software other than the Sysmac Studio to check the unit versions of the Communications Coupler Unit and NX Units.
Refer to the operation manual for each type of Support Software for the methods to check unit versions.

## Unit Versions and Sysmac Studio Versions

The functions that are supported depend on the unit version of the Unit.
Use Sysmac Studio version 1.45 or higher with the NX-PNC202.

# Related Manuals

The following manuals are related. Use these manuals for reference.

| Manual name | Cat. No. | Model numbers | Application | Description |
|---|---|---|---|---|
| NX-series PROFINET Coupler Unit User's Manual | W623 | NX-PNC□□□ | Learning how to use an NX-series PROFINET Coupler Unit | The following items are described: the overall system and configuration methods of a PROFINET Coupler Unit, and information on hardware, setup, and functions to set up, control, and monitor NX Units. |
| Sysmac Studio Version 1 Operation Manual | W504 | SYSMAC-SE2□□□ | Learning about the operating procedures and functions of the Sysmac Studio. | Describes the operating procedures of the Sysmac Studio. |
| NX-series Data Reference Manual | W525 | NX-□□□□□□ | Referencing lists of the data that is required to configure systems with NX-series Units | Lists of the power consumptions, weights, and other NX Unit data that is required to configure systems with NX-series Units are provided. |
| NX-series Digital IO Units User's Manual | W521 | NX-ID□□□□<br>NX-IA□□□□<br>NX-OC□□□□<br>NX-OD□□□□ | Learning how to use NX-series Digital IO Units | The hardware, setup methods, and functions of the NX-series Digital IO Units are described. |
| NX-series Analog IO Units User's Manual for Analog Input Units and Analog Output Units | W522 | NX-AD□□□□<br>NX-DA□□□□ | Learning how to use NX-series Analog Input Units and Analog Output Units | The hardware, setup methods, and functions of the NX-series Analog Input Units and Analog Output Units are described. |
| NX-series System Units User's Manual | W523 | NX-PD1□□□<br>NX-PF0□□□<br>NX-PC0□□□<br>NX-TBX01 | Learning how to use NX-series System Units | The hardware and functions of the NX-series System Units are described. |
| NX-series Position Interface Units User's Manual | W524 | NX-EC0□□□<br>NX-ECS□□□<br>NX-PG0□□□ | Learning how to use NX-series Position Interface Units | The hardware, setup methods, and functions of the NX-series Incremental Encoder Input Units, SSI Input Units, and Pulse Output Unit are described. |
| NX-series Load Cell Input Unit User's Manual | W565 | NX-RS□□□□ | Learning how to use NX-series Load Cell Input Unit | The hardware, setup methods, and functions of the NX-series Load Cell Input Unit are described. |
| NX-series Analog IO Units User's Manual for Temperature Input Units and Heater Burnout Detection Units | W566 | NX-TS□□□□<br>NX-HB□□□□ | Learning how to use NX-series Temperature Input Units and Heater Burnout Detection Units | The hardware, setup methods, and functions of the NX-series Temperature Input Units and Heater Burnout Detection Units are described. |
| NX-series Temperature Control Units User's Manual | H228 | NX-TC□□□□ | Learning how to use NX-series Temperature Control Units. | The hardware, setup methods, and functions of the NX-series Temperature Control Units are described. |

# Terminology

| Term | Abbre-viation | Description |
|---|---|---|
| Communications Coupler Units | --- | The generic name of an interface unit for remote IO communications on a network between NX Units and a host network IO Controller. |
| General Station Description Markup Language | GSDML | A text file that contains general and device-specific specifications for communication and network configuration.. |
| Index | --- | The address of an NX object. |
| IO port | --- | A logical interface that is used by an NJ/NX-series CPU Unit or an NY-series Industrial PC to exchange data with an external device (IO Device or Unit). |
| IO refreshing | --- | Cyclic data exchange with external devices that is performed with predetermined memory addresses. |
| IO Controller from another manufacturer | --- | A PROFINET IO Controller from another manufacturer. |
| Network Configuration Information | --- | The PROFINET network configuration information held by the PROFINET IO Controller. |
| NX Bus | --- | The NX-series internal bus. |
| NX-IO System | --- | A module type I/O system that consists of NX-series CPU Units or Communications Couplers that use NX bus technology. |
| NX Unit | --- | An IO or System Unit connected to the bus of an NX Communication Coupler Unit. |
| NX Unit message communications | --- | One form of NX bus communications that uses message communications to execute the functions of NX Units and access NX objects whenever required. |
| Object | --- | An abstract representation of a particular component within a device, which consists of data, parameters, and methods. |
| PDO Communications | --- | An acronym for process data communications. |
| Programmable Logic Controller | PLC | An industrial digital computer used to control manufacturing processes. |
| Process Data | --- | Collection of application objects designated to be downloaded cyclically or acyclically for the purpose of measurement and control. |
| Process Data Communications | --- | One type of NX bus communications in which process data objects (PDOs) are used to exchange information cyclically and in realtime. |
| Process Data Object | PDO | A structure that describes the mappings of parameters that have one or more process data entities. |
| Profinet IO Device Terminal | --- | A building-block remote IO terminal, which consists of a Communications Coupler Unit connected with NX Units. |
| PROFINET IO Device | --- | A device that outputs the data that is received from the PROFINET IO Controller through the PROFINET network to a connected external device, and sends the data that is input from a connected external device to the PROFINET IO Controller through the PROFINET network. |
| PROFINET IO Controller | --- | A device that monitors the status of the connections with Profinet IO Devices and exchanges IO data with Profinet IO Devices through the PROFINET network. |
| Safety Extra Low Voltage | SELV | An electrical system in which the voltage cannot exceed Extra Low Voltage conditions. |
| Subindex | --- | The sub-address of an NX object. |

# Revision History

A manual revision code appears as a suffix to the catalog number on the front and back covers of the manual.

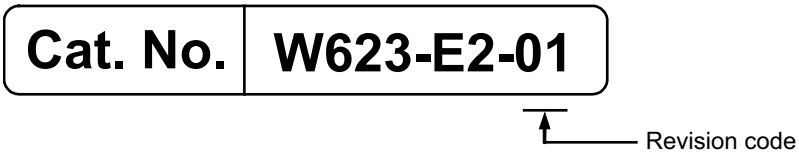


| Revision code | Date | Revised content |
|---|---|---|
| 01 | April 2021 | Original production |

# Sections in this Manual


1 PROFINET IO Technology

2 Features and System Configuration

3 Specifications and Application Procedures

4 Part Names and Functions

5 Designing the Power Supply System

6 Installation

7 Wiring

8 PROFINET Communications

9 Setting Up the PROFINET Coupler Unit

10 I/O Refreshing

11 PROFINET Coupler Unit Functions

12 Troubleshooting

13 Maintenance and Inspection

A Appendices

I Index

# 1



# PROFINET IO Technology

This section provides an introduction to PROFINET IO.

**1-1 Introduction to PROFINET . . . . . 1-2**
**1-2 PROFINET Distributed IO . . . . . 1-3**
**1-3 PROFINET communication Services . . . . . 1-6**

# 1-1 Introduction to PROFINET

As a common solution for the industrial communication, the PROFIBUS and PROFINET International organisation introduced the PROFINET Industrial Ethernet standard.

PROFINET is the innovative and open standard for Industrial Ethernet. PROFINET satisfies all requirements for automation technology. With PROFINET, solutions can be implemented for factory and process automation, for safety applications and for motion control. PROFINET is now standardized in IEC 61158 and IEC 61784.

The use of PROFINET minimizes the cost of installation, engineering and commissioning.

## ● PROFINET IO

The IO data of field devices are cyclically transmitted to the process image of the PLC.

The PROFINET IO device model is based on the PROFIBUS implementation. The characteristics of the field devices are described via a General Station Description (GSDML) on an XML basis.

The distributed field devices are allocated to a controller during configuration.

## ● PROFINET CBA

The PROFINET component model has its application in distributed automation systems. This is mainly used for intelligent field devices with programmable functionality as well as controllers. PROFINET CBA divides distributed, complex applications into autonomous units of manageable size.

A distributed automation system based on these autonomous units simplifies the modularization of plants and machines, permitting separate and cross-vendor development.

# 1-2 PROFINET Distributed IO

The focus of PROFINET IO is to have cyclic data exchange between a controller and multiple often simple communication devices. The aim is to have high performance and ease to use.

The PROFINET IO distinguishes the following different device roles. Please note a single device can have multiple roles.

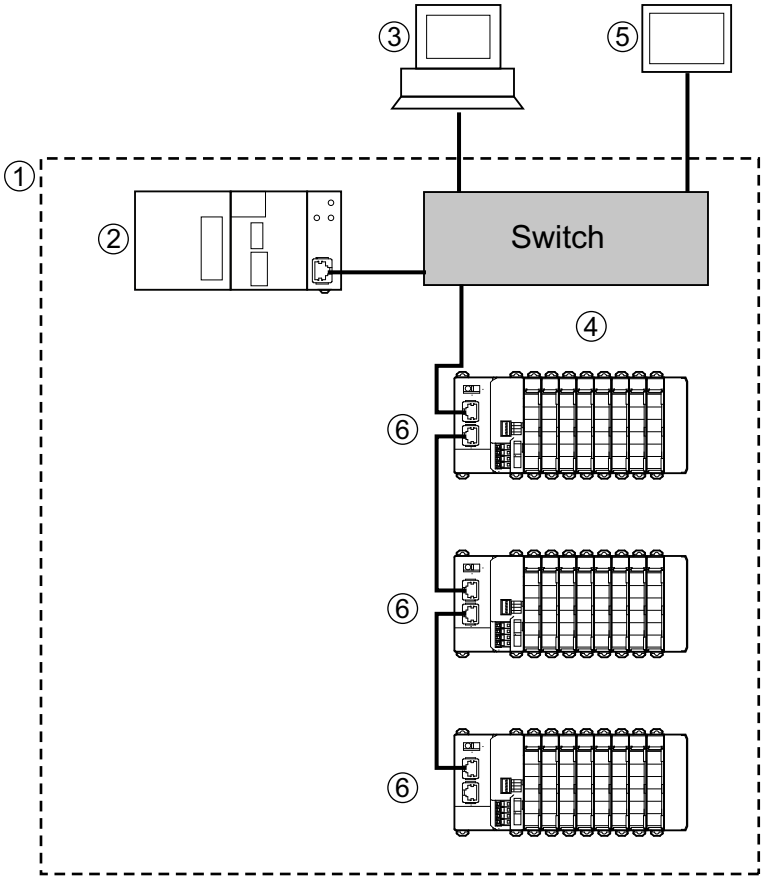


| Number | PROFINET | Comment |
|---|---|---|
| 1 | IO System | |
| 2 | IO Controller | Device that addresses the connected IO units by exchanging input and output signals with them.<br>This controller normally runs the automation program. |
| 3 | IO Supervisor | Device (e.g. a PC) for commissioning and diagnostics. |
| 4 | Ethernet | Network infrastructure. |
| 5 | User Interface | Device for operating and monitoring the functions of the system. |
| 6 | IO device | Device for receiving sensor signals and controlling actuators like valves, switches and frequency converters. |

- **IO Controller**

  A PROFINET IO Controller is the central device in the PROFINET network. It has the control over the state of the network and processes the data and alarms. The IO Controller typically is a PLC Unit that processes the data and alarms in the user program. It establishes the connection to the devices on the network during system start-up.

- **IO Supervisor**

  A PROFINET IO Supervisor is an optional device in the network, which has temporary access to the field devices. It is typically an engineering station for monitoring or commissioning of the system.

- **IO Device**

  A PROFINET IO Device is a remotely connected field device, close to the manufacturing process. It is configured by the IO Controller to cyclically interchange process data with the IO Controller. The IO Device can have multiple connections to different IO Controllers / IO Supervisors in the network and will generate alarms if problems occur with the communication or the manufacturing process.

- **Device Model**

  The PROFINET IO application layer describes the modules of an IO Device in a similar way as for PROFIBUS DP. A PROFINET IO Device consists of slots for which the modules/submodules can be inserted. The technical data concerning the slots and subslots are defined in the GSDML file of a device.

- **Slot**

  A Slot is the physical place of insertion of a module in an IO Device. Various subslots are located in the various slots, which contain data for cyclic data exchange.

- **Subslot**

  Subslots provide an additional addressing layer. They enable grouping of similar channels within a slot. Each slot has to comprise at least one subslot with [1:n] IO channels.

- **Index**

  The index specifies the data related to a specific subslot, to be read or written acyclically.

The device model is shown in the following graph:

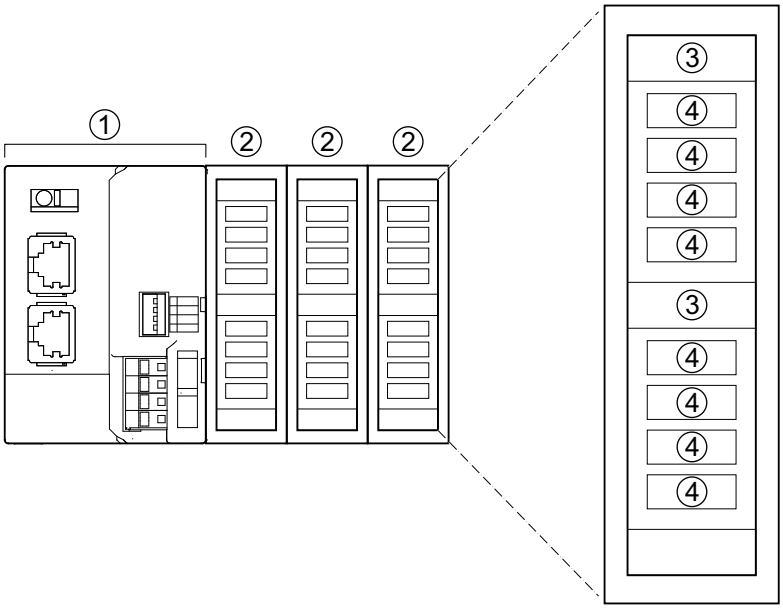


| Number | Description |
|---|---|
| 1 | Communication Unit |
| 2 | IO Module |
| 3 | Submodule |
| 4 | Channel |

**Provider/Consumer Model**

The data exchange between IO Controller and the IO Devices is carried out based on the provider-consumer model. The provider sends its data to the consumer without a request from the other device. The consumer processes the data. The provider (as the consumer) is either the IO Controller or the IO Device.

The Input Output Provider Status (IOPS) indicates the status of the data source (valid or invalid) for each of the modules as part of the data exchange message. This can be the Output data for the IO Controller and the Input data for the IO Device. The provider status is either bad or good, implying the received data is either invalid or valid for use. For example the Output data of the IO Controller is set to bad in case the PLC is in Program mode.

The Input Output Consumer Status (IOCR) indicates the feedback on the provided data received before. This status (Bad or Good) is indicated in the Input data for the IO Controller and the Output data for the IO Device.

# 1-3 PROFINET communication Services

The IO Controller establishes a connection to its IO Devices based on the configuration which has been given by the user. The Application Relation (AR) includes all data needed to achieve this data exchange. A single AR can include multiple Communication Relations (CRs). For implementation of different communication profiles, such as PROFIdrive, the PROFINET IO contains special addressing elements. These elements are called Application Process Identifier (APIs).

The following CRs are possible for each API.

- IOCR, consisting of input, output or multicast
- Record data CR for exchange of acyclic data
- Alarm-CR for communicating alarms and other events

The data exchange between the IO Device and the IO Controller occurs in a poll cycle as configured by the IO Controller. The user is capable to set this update cycle in the IO Controller configuration for each of the IO Devices. This results in mutual monitoring of functional operability (watchdog function). All cyclic data is provided with a status that encodes the validity of the data.

# 2

# Features and System Configuration



This section describes the features and system configurations of PROFINET Coupler Unit.

**2-1 Features of the PROFINET Coupler Unit . . . . . 2-2**

**2-2 System Configurations of PROFINET Coupler Unit . . . . . 2-4**

2-2-1 System Configuration . . . . . 2-4

2-2-2 Types of NX Units . . . . . 2-6

**2-3 Sysmac Studio . . . . . 2-9**

2-3-1 Connection Method and Procedures . . . . . 2-9

# 2-1 Features of the PROFINET Coupler Unit

A PROFINET Coupler Unit is the connecting unit between a PROFINET IO Controller and a group of NX Units.

The NX Units can be flexibly combined with a PROFINET Coupler Unit to achieve the optimum Profinet IO Device for the application with less wiring, less work, and less space.

The features of the PROFINET Coupler Unit described below.

## I/O Data Exchange

Cyclic I/O data exchange is used to exchange I/O data between the PROFINET IO Controller and NX IO Units through the PROFINET Coupler Unit. In addition to I/O data, status information in the PROFINET Coupler Unit can be accessed from the PROFINET IO Controller Unit.

## Parallel PROFINET Based Networking

Various, general-purpose Ethernet devices can be used within the same PROFINET network because PROFINET uses standard Ethernet technology.

## Flexible Network Structures

The PROFINET Coupler Unit is equipped with two Ethernet ports that support the layer 2 Ethernet switch functions.

This enables you to configure, in addition to star and tree topologies, a line topology without using Ethernet switches.

## Features That Reduce Equipment Design Work and Commissioning Work, and Encourage Modular Equipment Design

### Registering NX Units in the Unit Configuration Information as Unmounted Units for Future Expansion (Designing, Commissioning, and Modularity)

You can register any NX Units as unmounted Units in the Unit configuration information. This allows the following possibilities.

- NX Units for future expansion can be registered in advance. This eliminates the need to change the user program when the NX Units are actually added. (Designing)
- If certain NX Units are temporarily unavailable, you can still debug the system in advance with the NX Units that are available. (Commissioning)
- Even if the number of NX Units changes depending on the type of equipment, the user program does not have to be changed. (Designing and Modularity)

### Exporting/importing NX Unit Settings (Designing)

You can use the Sysmac Studio to export and import the NX Unit settings as files. This allows you to reuse settings from NX Units for other PROFINET Coupler Units or NX Units.

### Simplified IO Wiring with Screwless Clamping Terminal Blocks (Commissioning)

The PROFINET Coupler Unit and the NX Units use screwless clamping terminal blocks. The use of ferrules makes wiring an easy matter of inserting them. The screwless design greatly reduces wiring work.

## Fail-soft Operation

Fail-soft operation is provided so that the PROFINET Coupler Unit can start or continue IO refreshing only with the NX Units that can operate normally when an error occurs for the Profinet IO Device Terminal.

You can use fail-soft operation in the following cases.

- When it is dangerous to stop the entire Profinet IO Device Terminal all at once
- To continue the operation of the Profinet IO Device Terminal until the system can be stopped safely through the user program or user operation
- To not stop all devices, i.e., to continue operation for only some devices

# 2-2 System Configurations of PROFINET Coupler Unit

This section describes the system configuration of a Profinet IO Device Terminal.

## 2-2-1 System Configuration

An example of a system configuration for a Profinet IO Device Terminal is shown below.

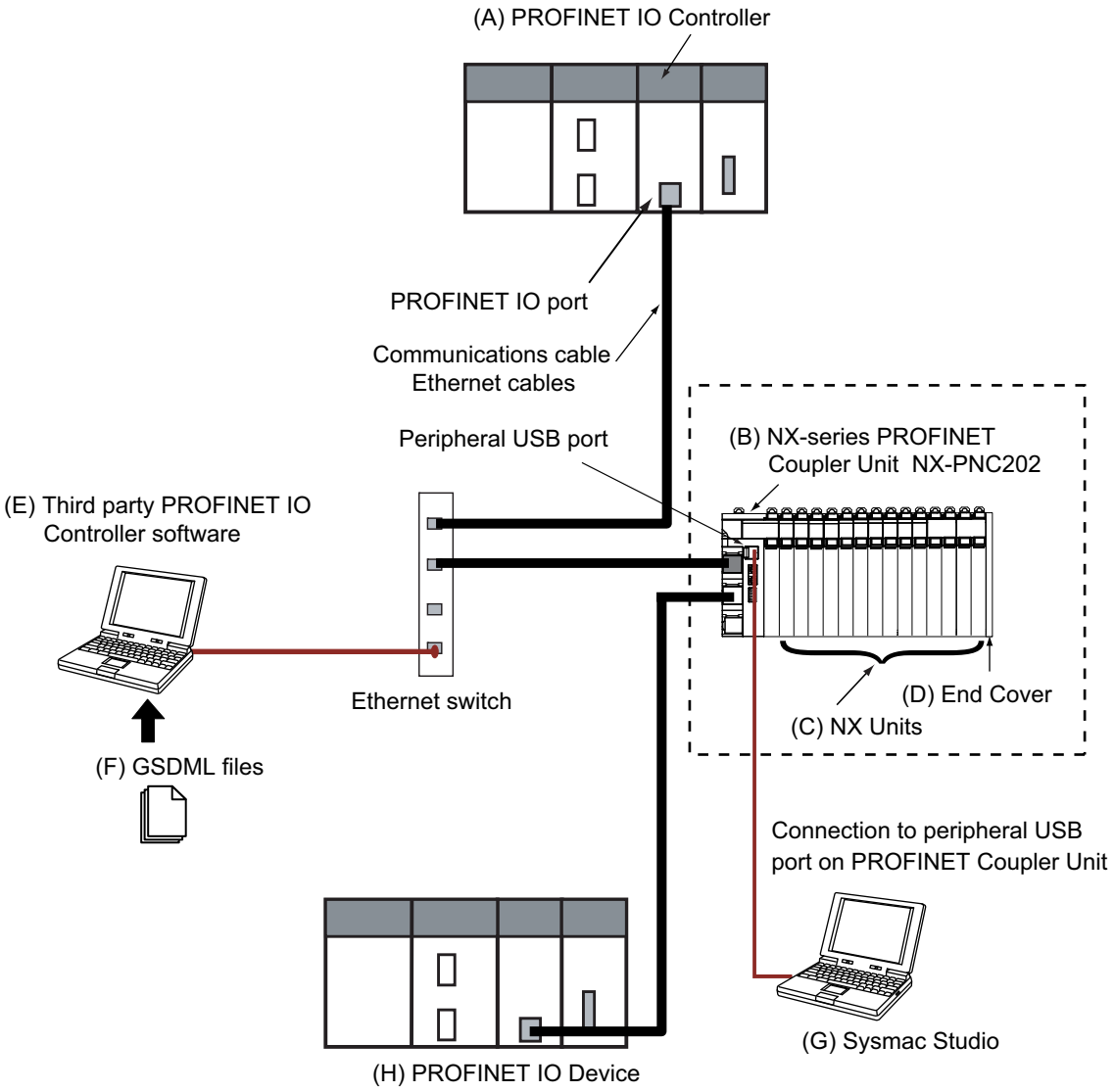

| Letter | Item | Description |
|---|---|---|
| (A) | PROFINET IO Controller | The PROFINET IO Controller manages the PROFINET network, monitors the status of the IO Devices, and exchanges IO data with the IO Devices. |
| (B) | PROFINET Coupler Unit | The PROFINET Coupler Unit is an interface that performs IO refresh communications between a group of NX Units and the PROFINET Unit over a Profinet network.<br>The IO data for the NX Units is first accumulated in the PROFINET Coupler Unit and then all of the data is exchanged with the PROFINET Unit at the same time.<br>You can connect up to 63 NX Units. |
| (C) | NX Units*1 | The NX Units perform IO processing with connected external devices. The NX IO Units perform IO refresh communications with the PROFINET IO Controller through the PROFINET Coupler Unit. |
| (D) | End Cover | The End Cover is attached to the end of the IO Device Terminal. |
| (E) | Third party PROFINET IO Controller Software | The Third party PROFINET IO Controller Software runs on a personal computer and it is used to configure the PROFINET IO Controller and the connected PROFINET IO network with all IO Devices. |
| (F) | GSDML file | The GSDML file of the PROFINET Coupler Unit allows the user to configure the IO Controller Unit and the network for I/O data exchange with the PROFINET Coupler Unit and the NX IO System. |
| (G) | Sysmac Studio | Use Sysmac Studio to adjust the settings of the IO Device Terminal with the configuration and operation settings of the NX Units and PROFINET Coupler Unit. |
| (H) | PROFINET IO Device | The PROFINET IO Units that are coupled to the PROFINET IO Controller by means of the PROFINET Coupler Unit. |

*1. For whether an NX Unit can be connected to the PROFINET Coupler Unit, refer to the version information in the user's manual for the NX Unit.

**Precautions for Correct Use**

Do not make a loop connection in the communications path between Ethernet switches. If a loop connection is made, the broadcast frame will continue to loop around the path, creating a broadcast stream. This will place a high load on the network and may cause unstable communications.

An example of a loop connection in the communications path is shown below.

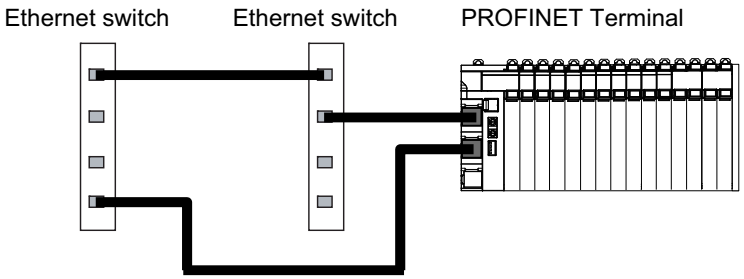


**Precautions for Correct Use**

This system cannot detect that the NX-PNC configuration data and PROFINET setting data are different because NX unit data size is fixed In/Out 512byte.

Check the user program, data and parameter settings for proper execution before you use them for actual operation.

## 2-2-2 Types of NX Units

The following table lists some examples of the types of NX Units that are available.

| Unit type | | Overview |
|---|---|---|
| Digital IO Units | | These Units process IO with digital signals. |
| | Digital Input Units | These Units process inputs with digital signals. |
| | Digital Output Units | These Units process outputs with digital signals. |
| Analog IO Units | | These Units process IO with analog signals. |
| | Analog Input Units | These Units process inputs with analog signals. |
| | Analog Output Units | These Units process outputs with analog signals. |
| | Temperature Input Units | These Units process inputs from temperature sensors. |
| | Heater Burnout Detection Units | Heater Burnout Detection Units have the following functions.<br>• Monitoring of CT currents to provide alarms for heater burnouts and SSR failures<br>• Time-proportional control output processing to operate heaters with SSRs |
| System Units | | System Units are used as required to build an IO Device Terminal. |
| | Additional NX Unit Power Supply Unit | This Unit is used when the NX Unit power supply is not sufficient. |
| | Additional IO Power Supply Unit | This Unit is used when the IO power supply is not sufficient or to separate the power supply in the IO Device Terminal. |
| | IO Power Supply Connection Unit | This Unit is used when the IO power supply terminals for connections to external IO devices are not sufficient. |
| | Shield Connection Unit | This Unit is used to ground more than one shield wire from external IO connections to the same ground. |
| Load Cell Input Units | | These Units perform input processing of the output signal from a load cell to measure the weight or force. |
| Temperature Control Unit | | This Unit receives signals from the temperature sensor and controls the heater temperature to match the set temperature. |
| Position Interface Units | | These Units perform IO processing of position data for positioning. |
| | Incremental Encoder Input Units | These Units count pulses from incremental encoders. |
| | SSI Input Units | These Units process serial signal inputs from absolute encoders or linear scales that have an SSI interface. |
| RFID Units | | These Units use Radio-Frequency Identification. |

Refer to the user's manual for the specific Units for details.

For information on the most recent lineup of NX Units, refer to NX-series catalogs or OMRON websites, or ask your OMRON representative.

| Item | Specification |
|---|---|
| **NX Safety Units** | NOT supported |
| **NX IO Link Units** | NOT supported |
| **NX CIF Serial Communication Units** | NOT supported |
| **NX PG Pulse Output Units** | NOT supported |

| Item | Specification |
|---|---|
| **Installation orientation and restrictions** | Installation orientation: 6 possible orientations<br>Restrictions:<br>• Used in the upright installation orientation.<br> 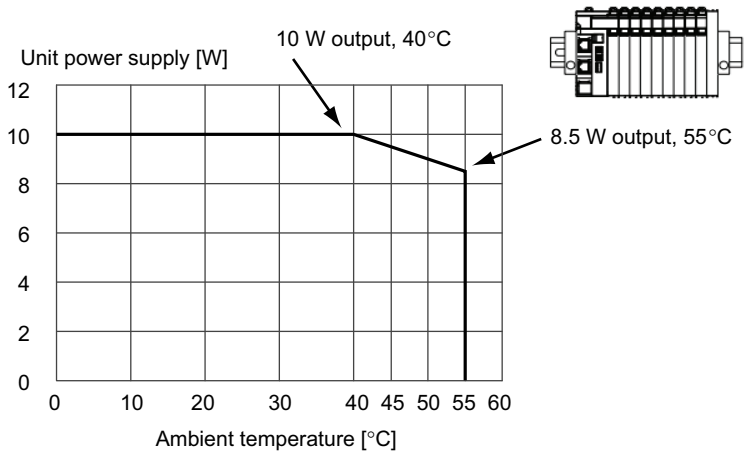 <br><br>• Used in any other orientation than the upright installation orientation.<br> 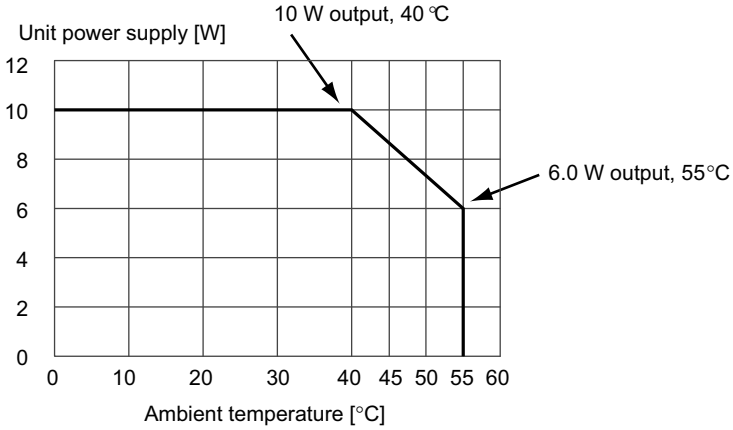 <br><br> 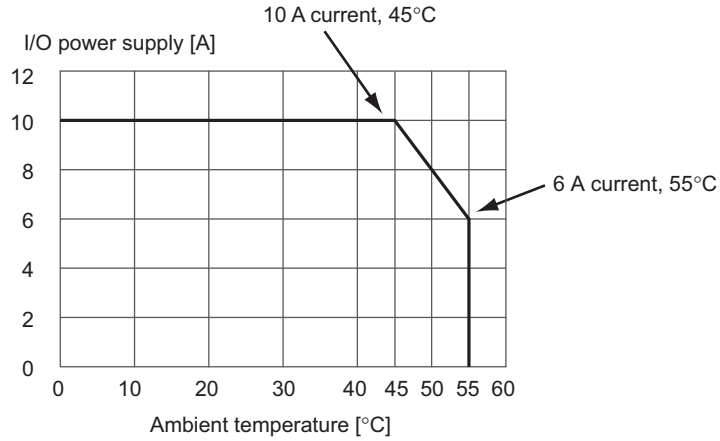 <br> |

| Item | Specification |
|---|---|
| **Circuit layout** | 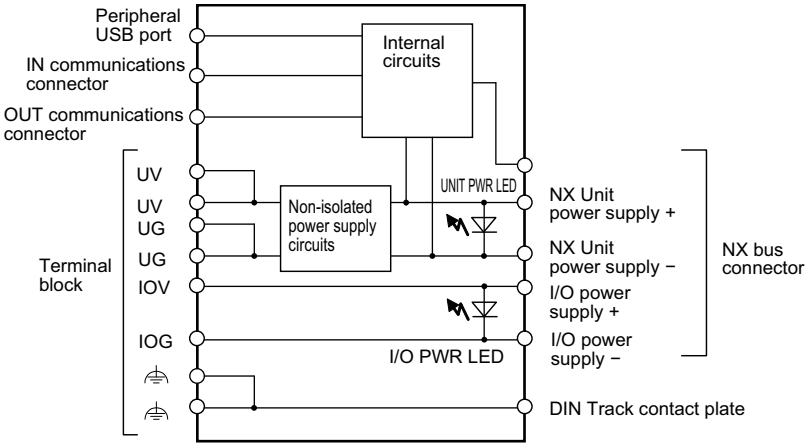 |
| **Terminal arrangement** | 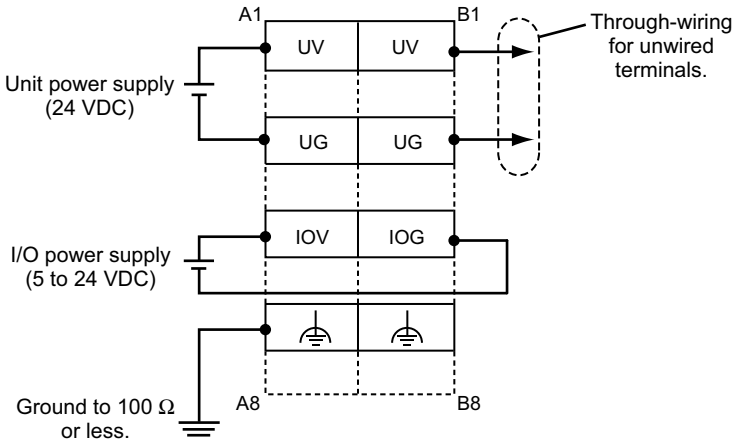 |
| **Accessory** | End Cover (NX-END01): 1 |

# 2-3 Sysmac Studio

This section describes the Sysmac Studio that is used to set up the Profinet IO Device Terminal.



## 2-3-1 Connection Method and Procedures

This section describes the method and procedures that are used to connect the Sysmac Studio to a Profinet IO Device Terminal. The Sysmac Studio is connected to a USB port of a PROFINET Coupler Unit as an example. For Support Software other than the Sysmac Studio, refer to the operation manual for the Support Software that you are using.

### Going Online through the USB Port on the PROFINET Coupler Unit

#### ● Connection Methods

You can place the Sysmac Studio online with the Profinet IO Device Terminal.
Connect the PC USB port to the USB port on the PROFINET Coupler Unit.

#### ● Connection Procedure

Use the following procedure to place the Sysmac Studio online.

**1** Connect the PROFINET Coupler Unit to a computer on which the Sysmac Studio is installed through a USB cable.

**2** Create a new project with the following settings.
Category: Slave terminal
Device: PROFINET Coupler
Refer to *9-2-2 Setting the NX Unit Configuration Information* on page 9-5 for the procedures to create the Unit configuration information.

**3** Right-click the PROFINET Coupler Unit in the Edit Profinet IO Device Terminal Configuration Tab Page, and select ***Coupler Connection (USB)*** – ***Online***. Or, right-click the PROFINET Coupler Unit in the Multiview Explorer and select ***Coupler Connection (USB)*** – ***Online***.

A confirmation dialog box is displayed.

**4** Click the **OK** button.

The Sysmac Studio goes online with the Profinet IO Device Terminal.

The scope of access from the Sysmac Studio when it is connected to the USB port on the PROFINET

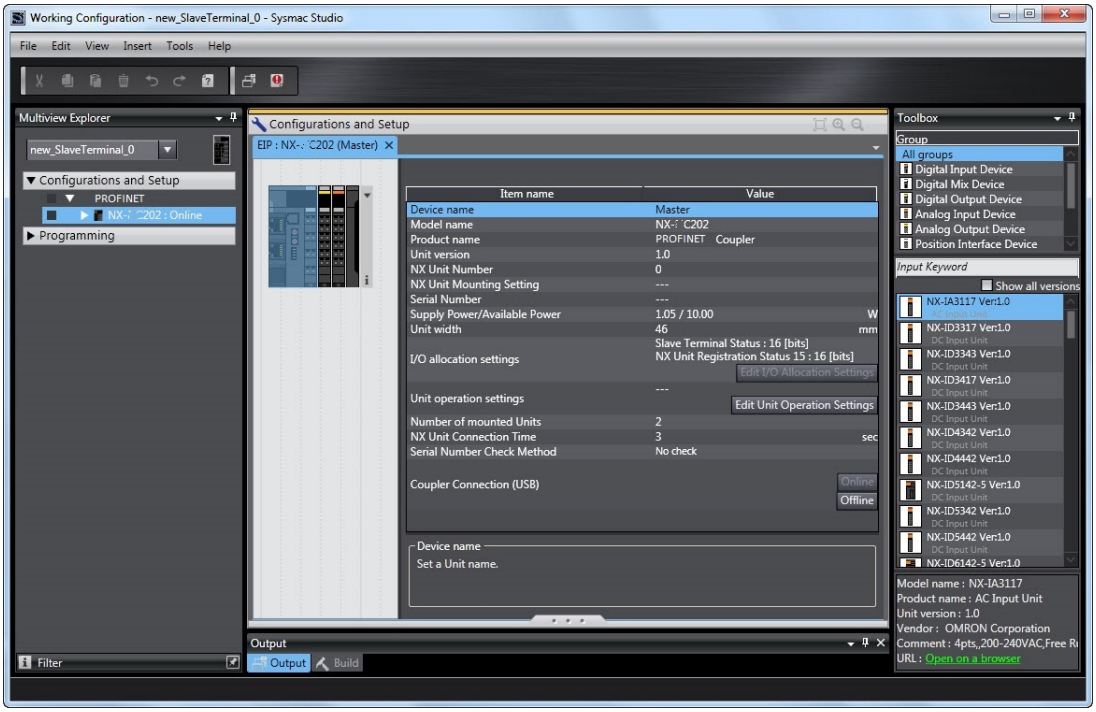


The scope of access from the Sysmac Studio when it is connected to the USB port on the PROFINET Coupler Unit is limited to the Profinet IO Device Terminal at the connection. Sysmac Studio cannot access any Units that are not at the direct USB connection such as other PROFINET IO Devices.

# 3

# Specifications and Application Procedures



This section provides the general specifications of the Profinet IO Device Terminal, the specifications of the PROFINET Coupler Unit and End Cover, and the applications procedures for the Profinet IO Device Terminal.

**3-1 Specifications . . . . . 3-2**
3-1-1 General Specifications of PROFINET IO Device Terminals . . . . . 3-2
3-1-2 PROFINET Specifications . . . . . 3-3
3-1-3 PROFINET Coupler Unit Specifications . . . . . 3-4
3-1-4 End Cover Specifications . . . . . 3-6
**3-2 Procedures . . . . . 3-7**
3-2-1 PROFINET IO Device Terminal Application Procedures . . . . . 3-7
3-2-2 Details . . . . . 3-9

# 3-1 Specifications

This section provides the general specifications of a Profinet IO Device Terminal and the specifications of the PROFINET Coupler Unit and End Cover.

## 3-1-1 General Specifications of PROFINET IO Device Terminals

Specifications of Profinet IO Device Terminals.

| Item | | Specification |
|---|---|---|
| **Enclosure** | | Mounted in a panel |
| **Grounding method** | | Ground to 100 Ω or less |
| **Operating environment** | **Ambient operating temperature** | 0 to 55°C |
| | **Ambient operating humidity** | 10% to 95% (with no condensation or icing) |
| | **Atmosphere** | Must be free from corrosive gases. |
| | **Ambient storage temperature** | –25 to 70°C (with no condensation or icing) |
| | **Altitude** | 2,000 m max. |
| | **Pollution degree** | 2 or less: Conforms to JIS B3502 and IEC 61131-2. |
| | **Noise immunity** | 2 kV on power supply line (Conforms to IEC61000-4-4.) |
| | **Overvoltage category** | Category II: Conforms to JIS B3502 and IEC 61131-2. |
| | **EMC immunity level** | Zone B |
| | **Vibration resistance** | Conforms to IEC 60068-2-6.<br>5 to 8.4 Hz with 3.5-mm amplitude, 8.4 to 150 Hz, acceleration of 9.8 m/s$^2$, 100 min each in X, Y, and Z directions (10 sweeps of 10 min each = 100 min total)*1 |
| | **Shock resistance** | Conforms to IEC 60068-2-27. 147 m/s$^2$, 3 times each in X, Y, and Z directions*1 |
| **Applicable standards*2** | | cULus: Listed UL508 and ANSI/ISA 12.12.01<br>EC: EN 61131-2, C-Tick or RCM, KC |

*1. Refer to the *NX-series Digital IO Units User's Manual* (Cat. No. W521) for the vibration and shock resistance specifications of the Relay Output Unit.

*2. Refer to the OMRON website (http://www.ia.omron.com/) or consult your OMRON representative for the most recent applicable standards for each model.

## 3-1-2 PROFINET Specifications

| Item | | Specification |
|---|---|---|
| **Manufacture ID** | | 0x0264 |
| **Device ID** | | 0x1500 |
| **PROFINET version** | | 2.41 |
| **Application Relationship** | | Max 1 |
| **Send Data Interval** | | 64, 128, 256, 512 ms |
| **Data Size (In)** | **Status** | 28Bytes |
| | **NX Unit In** | 512Bytes *1 |
| **Data Size (Out)** | **Unit Control** | 2 Bytes |
| | **NX Unit Out** | 512 Bytes *1 |
| **PROF-INET interface** | **Protocol** | PROFINET IO |
| | **PROFINET unit type** | PROFINET IO Device |
| | **Isochronous mode** | No |
| | **Alarms** | No |
| | **Conformance Class** | Class-A |
| **Transfer specifica-tions** | **Link speed** | 100 Mbps |
| | **Ethernet physical layer** | 100BASE-TX |
| **Topology** | | Line, Tree, Star |

*1. NX Unit data size is fixed 512Bytes. If this is not enough the shortage data is filled with padding data. The data in the padding part will be zero.

## 3-1-3 PROFINET Coupler Unit Specifications

| Item | | Specification |
|---|---|---|
| **Model** | | NX-PNC202 |
| **Number of connectable NX Units** | | 63 Units max |
| **NX-Bus refreshing method** | | Free-Run refreshing |
| **NX bus I/O data size** | | Input: up to 512 bytes<br>Output: up to 512 bytes |
| **Ethernet connection** | | RJ45(2 port) with switching hub(Layer 2), 100Mbps, full-duplex, auto-negotiate*1<br>Max length of Ethernet cable: 100m |
| **Unit power supply** | **Power supply voltage** | 24 VDC (20.4 to 28.8 VDC) |
| | **NX Unit power supply capacity** | 10 W max.<br>Refer to *Installation orientation and restrictions* for details. |
| | **NX Unit power supply efficiency** | 70% |
| | **Isolation method** | No isolation between NX Unit power supply and Unit power supply terminals |
| | **Current capacity of power supply terminals** | 4 A max. |
| **I/O power supply** | **Power supply voltage** | 5 to 24 VDC (4.5 to 28.8 VDC) |
| | **Maximum I/O power supply current** | 10 A<br>Refer to *Installation orientation and restrictions* for details. |
| | **Current capacity of power supply terminals** | 10 A max. |
| **NX Unit power consumption** | | 1.60 W max. |
| **Current consumption from I/O power supply** | | 10 mA max. (for 24 VDC) |
| **Dielectric strength** | | 510 VAC for 1 min,<br>leakage current: 5 mA max. (between isolated circuits) |
| **Insulation resistance** | | 100 VDC, 20 MΩ min. (between isolated circuits) |
| **USB port** | | USB 2.0(Full speed: 12Mbbs), Type-B, Max. 5m |
| **Dimensions (width height depth)** | | 46 mm * 100 mm * 71 mm |
| **Weight** | | 150 g max |

| Item | Specification |
|---|---|
| **Installation orientation and restrictions** | Installation orientation: 6 possible orientations<br>Restrictions:<br>• Used in the upright installation orientation.<br> 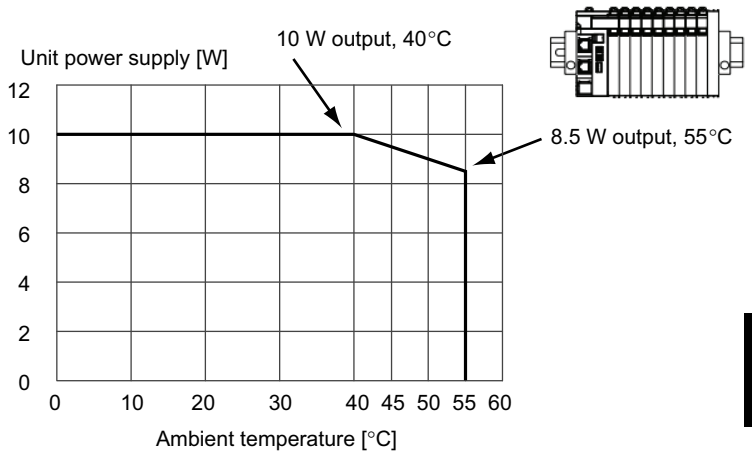 <br><br>• Used in any other orientation than the upright installation orientation.<br> 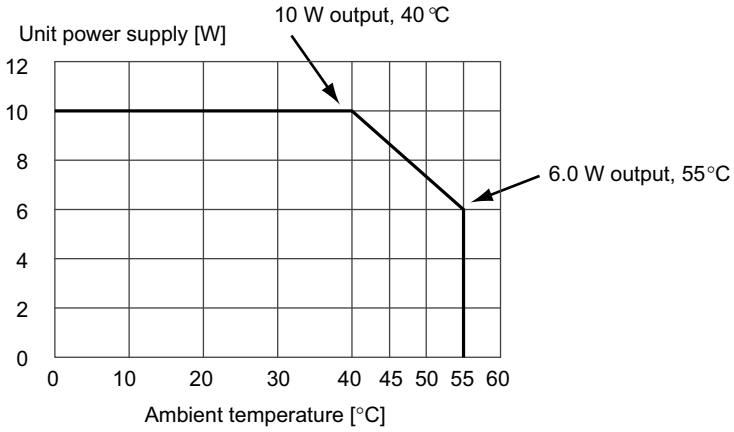 <br><br> 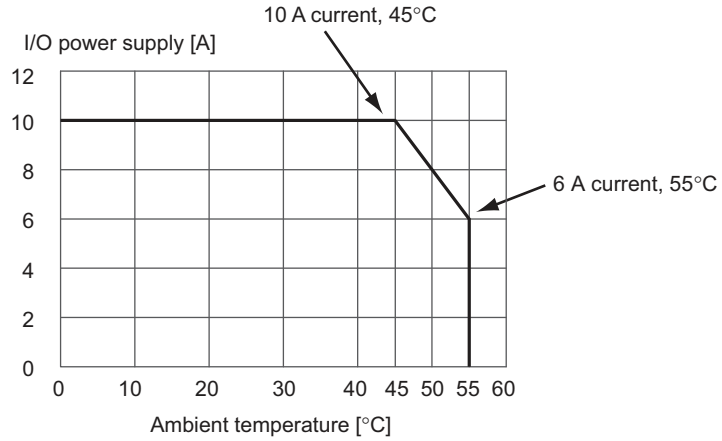 <br> |

| Item | Specification |
|---|---|
| **Circuit layout** | 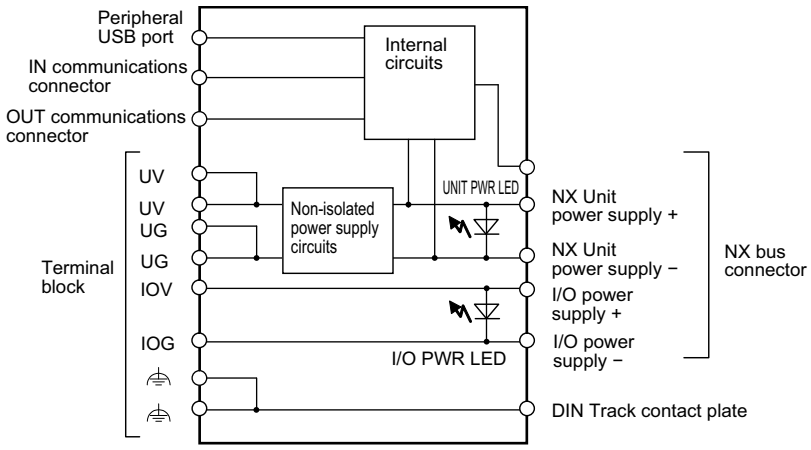 |
| **Terminal arrangement** | 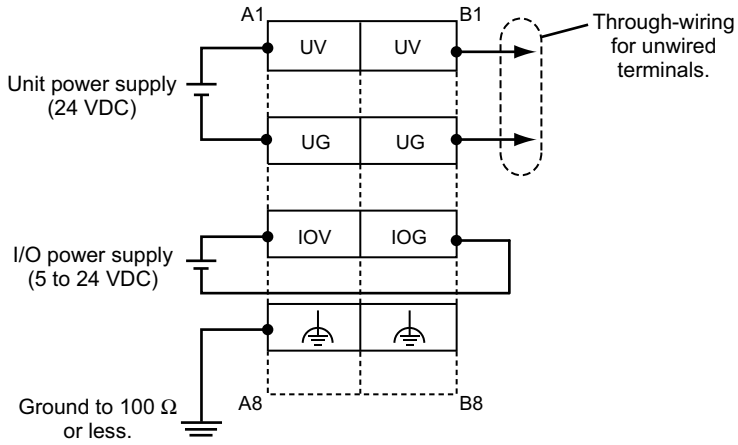 |
| **Accessory** | End Cover (NX-END01): 1 |

*1. It is not supported to change duplex mode(full/half).

## 3-1-4 End Cover Specifications

| Item | Specification |
|---|---|
| **Model** | NX-END01 |
| **Dimensions** | 12 × 100 × 71 (W×H×D) |
| **Weight** | 35 g max. |

# 3-2 Procedures

This section describes how to use PROFINET Coupler Unit on a Profinet network.

## 3-2-1 PROFINET IO Device Terminal Application Procedures

| Procedure | Sections |
|---|---|
| 1. Preparing for Work | • *2-2-2 Types of NX Units* on page 2-6<br>• *3-1 Specifications* on page 3-2<br>• *Section 5 Designing the Power Supply System*<br>• *6-1-3 Installation Orientation* on page 6-8<br>• Manuals for the specific NX Units |
| 2. Making Hardware Settings and Wiring the IO Device Terminal | • *4-3 Hardware Switch Settings* on page 4-8<br>• *6-1 Installing Units* on page 6-2<br>• *Section 7 Wiring* |
| 3. Setting the PROFINET Coupler Unit's IO Device Name | • *9-4 Setting PROFINET IO Device Name* on page 9-19 |
| 4. Configuring the IO Device Terminal and Making the Operation Settings | *9-2 Setting IO Device Terminal Parameters* on page 9-5 |
| 5. Transferring and Comparing PROFINET Coupler Unit Parameter Settings | *9-3 Transferring and Comparing Settings* on page 9-16 |
| 6. Setting PROFINET IO Data | *9-5 Setting PROFINET IO Data* on page 9-20 |
| 7. Allocate the IO Data to the IO Controller CPU's variables | *9-6 NX Unit IO Allocation* on page 9-27 |

| | |
|---|---|
| 8. Checking Indicators | • Software user's manual for the CPU Unit<br>• User's manual for the PROFINET Coupler Unit<br>• *4-2 Indicators* on page 4-5<br>• *12-2 Checking for Errors and Troubleshooting with the Indicators* on page 12-3 |

↓

| | |
|---|---|
| 9. Confirming Operation by Checking the Wiring | • Operation manual for the Sysmac Studio<br>• Manuals for the specific NX Units |

↓

| | |
|---|---|
| 10. Creating the User Program | • Software user's manual for the CPU Unit<br>• User's manual for the PROFINET Coupler Unit<br>• Instructions reference manual<br>• Operation manual for the Sysmac Studio |

## 3-2-2 Details

| Procedure | | Item | Description | Reference |
|---|---|---|---|---|
| 1 | Preparing for Work | Selecting NX Units | Select the NX Units and the quantity and types of IO that are required. | • *2-2-2 Types of NX Units* on page 2-6<br>• Manuals for the specific NX Units |
| | | Confirming Suitability of IO Device Terminal Specifications | Confirm that the following specific restrictions for the IO Device Terminal are met.<br>• Number of NX Units<br>• Design conditions for the NX Unit power supply and IO power supply<br>• Installation orientation | • *3-1 Specifications* on page 3-2<br>• *Section 5 Designing the Power Supply System*<br>• *6-1-3 Installation Orientation on page 6-8* |
| 2 | Making Hardware Settings and Wiring the IO Device Terminal | Installation | Connect the NX Units and End Cover to the PROFINET Coupler Unit and secure the IO Device Terminal to a DIN Track to install it. | *6-1 Installing Units* on page 6-2 |
| | | Wiring | Wire the IO Device Terminal.<br>• Connect the communications cables.<br>• Connect the Unit power supply.<br>• Connect the IO power supply.<br>• Connect the ground wire.<br>• Connect the external IO devices. | *Section 7 Wiring* |
| 3 | Setting the PROFINET Coupler Unit's IO Device Name | | Use the third party IO Controller software to set the IO device name. | *9-4 Setting PROFINET IO Device Name* on page 9-19 |
| 4 | Configuring the IO Device Terminal and Making the Operation Settings | | Set up the IO Device Terminal (create the configuration and set the parameters) with the Sysmac Studio. | *9-2 Setting IO Device Terminal Parameters* on page 9-5 |
| | | Creating the Unit Configuration Information | Create the IO Device Terminal configuration information such as number and order of NX Units, individual NX Unit information and information about the PROFINET Coupler Unit. | *9-2-2 Setting the NX Unit Configuration Information* on page 9-5 |
| | | Setting the IO Allocation Information | Make the IO allocations for the PROFINET Coupler Unit and NX Units as required. | *9-6 NX Unit IO Allocation on page 9-27* |
| | | Unit Operation Settings | Make the Unit operation settings for the PROFINET Coupler Unit and NX Units as required. | *9-2-3 Unit Operation Settings* on page 9-10 |
| | | Setting Unit Application Data | Create the Unit application data. This step applies only to Units that have Unit application data. | *9-2-4 Unit Application Data* on page 9-11 |
| 5 | Transferring and Comparing PROFINET Coupler Unit Parameter Settings | | Transfer and compare IO Device Terminal settings with the Sysmac Studio. | *9-3 Transferring and Comparing Settings* on page 9-16 |
| 6 | Setting PROFINET IO Data | | Use the third party PROFINET IO Controller software to set the IO data. | *9-5 Setting PROFINET IO Data* on page 9-20 |
| 7 | Allocate IO Data | | Allocate the IO Data to the IO Controller CPU's variables. | *9-6 NX Unit IO Allocation* on page 9-27 |

| Procedure | | Item | Description | Reference |
|---|---|---|---|---|
| 8 | Checking Indicators | | Check operation with the indicators on the CPU Unit, Industrial PC, PROFINET Units, and PROFINET Coupler Units. | • Software user's manual for the CPU Unit<br>• User's manual for the PROFINET Coupler Unit<br>• *4-2 Indicators* on page 4-5<br>• *12-2 Checking for Errors and Troubleshooting with the Indicators* on page 12-3 |
| 9 | Confirming Operation by Checking the Wiring | | Check the wiring by monitoring inputs or using forced refreshing of outputs from Watch Window of the Sysmac Studio. | • Operation manual for the Sysmac Studio<br>• Manuals for the specific NX Units |
| 10 | Creating the User Program | | Write the user program with network variables. | • Software user's manual for the CPU Unit<br>• User's manual for the PROFINET Coupler Unit<br>• Instructions reference manual<br>• Operation manual for the Sysmac Studio |

# 4

# Part Names and Functions

This section gives the names of the parts of the PROFINET Coupler Unit, NX Units, and End Cover and describes the functions of the parts.



**4-1 Parts and Names . . . . . 4-2**
4-1-1 PROFINET Coupler Unit . . . . . 4-2
4-1-2 NX Units . . . . . 4-3
4-1-3 End Cover . . . . . 4-4
**4-2 Indicators . . . . . 4-5**
**4-3 Hardware Switch Settings . . . . . 4-8**
**4-4 Communications Connector and Peripheral USB Port . . . . . 4-9**
**4-5 Terminal Blocks . . . . . 4-10**
**4-6 DIN Track Contact Plate . . . . . 4-12**

# 4-1 Parts and Names

This section gives the names of the parts of the PROFINET Coupler Unit, NX Units, and End Covers and describes the functions of the parts.

## 4-1-1 PROFINET Coupler Unit

This section gives the names of the parts of the PROFINET Coupler Unit.

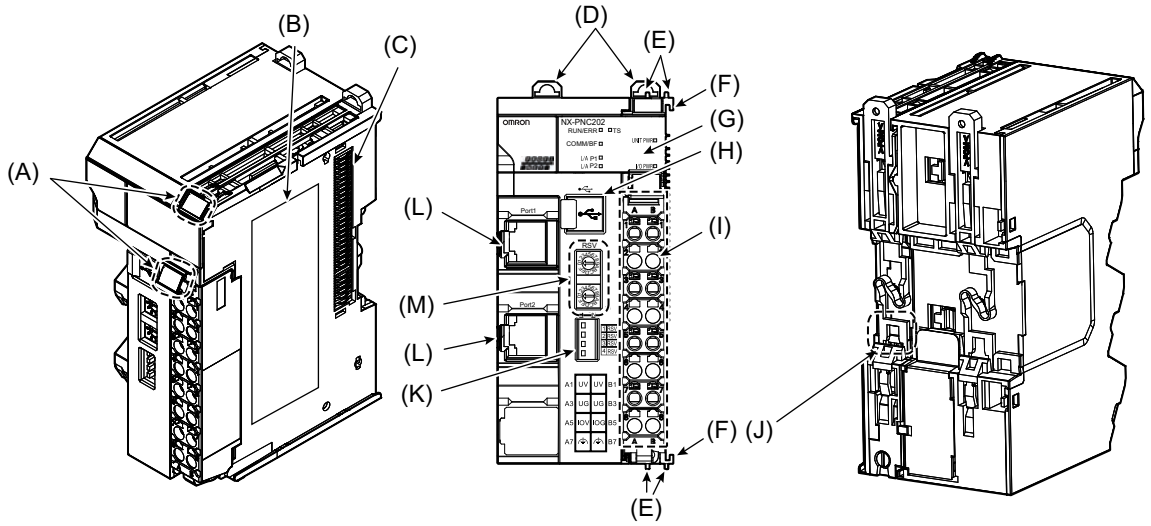


| Letter | Name | Function |
|---|---|---|
| (A) | Marker attachment locations | The locations where markers are attached. The markers made by OMRON are installed for the factory setting. Commercially available markers can also be installed.<br>For details, refer to *6-1-8 Attaching Markers* on page 6-17. |
| (B) | Unit specifications | The specifications of the Unit are engraved in the side of the casing. |
| (C) | NX bus connector | This connector is used to connect the PROFINET Coupler Unit to the NX Unit on the right of the Coupler Unit. |
| (D) | DIN Track mounting hooks | These hooks are used to mount the PROFINET Coupler Unit to a DIN Track. |
| (E) | Protrusions for removing the Unit | The protrusions to hold when removing the Unit. |
| (F) | Unit hookup guides | These guides are used to connect two Units. |
| (G) | Indicators | The indicators show the current operating status of the Unit and the status of the power supply. |
| (H) | Peripheral USB port | This port is used to connect to the Sysmac Studio. |
| (I) | Terminal block | The terminal block is used to connect to the power supply cables and ground wire. |
| (J) | DIN Track contact plate | This plate is connected internally to the functional ground terminal on the terminal block. |
| (K) | DIP switch | Not used |
| (L) | Communications connectors | These connectors are connected to the communications cables of the PROFINET network. |
| (M) | Rotary switches | Not used |

## 4-1-2 NX Units

This section provides an example of an NX Unit.

Refer to the user's manual for each NX Unit for specific information.

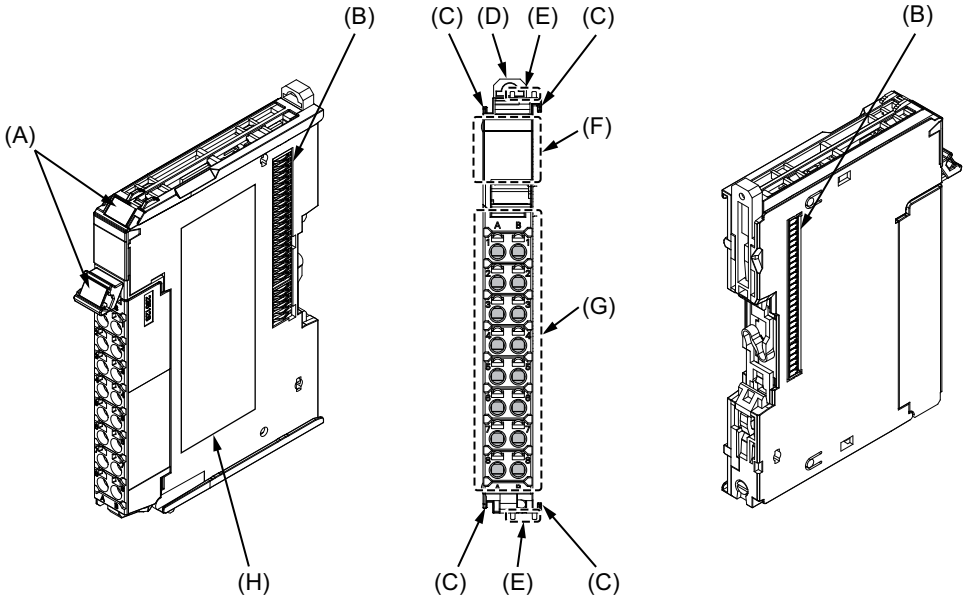


| Letter | Name | Function |
|---|---|---|
| (A) | Marker attachment locations | The locations where markers are attached. The markers made by OMRON are installed for the factory setting. Commercially available markers can also be installed. |
| (B) | NX bus connector | This connector is used to connect each Unit. |
| (C) | Unit hookup guides | These guides are used to connect two Units. |
| (D) | DIN Track mounting hooks | These hooks are used to mount the NX Unit to a DIN Track. |
| (E) | Protrusions for removing the Unit | The protrusions to hold when removing the Unit. |
| (F) | Indicators | The indicators show the current operating status of the Unit. |
| (G) | Terminal block | The terminal block is used to connect external devices.<br>The number of terminals depends on the type of Unit. |
| (H) | Unit specifications | The specifications of the Unit are given. |

## 4-1-3 End Cover

An NX-END01 End Cover is connected to the end of the Profinet IO Device Terminal.

One End Cover is provided together with the PROFINET Coupler Unit.

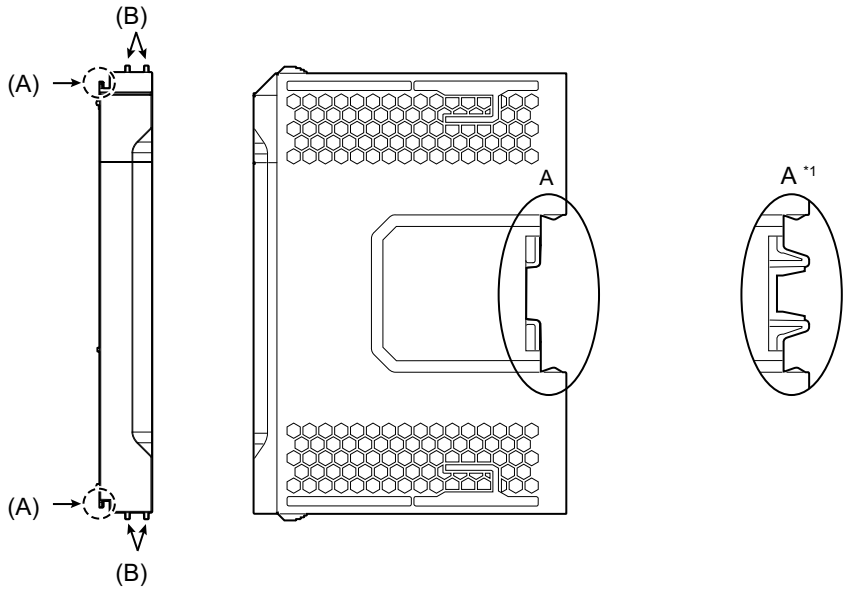


*1. This is the shape for Units with lot numbers through December 2014.

| Letter | Name | Function |
|---|---|---|
| (A) | Unit hookup guides | These guides are used to connect the End Cover to the NX Unit on the left of the End Cover. |
| (B) | Protrusions for removing the Unit | The protrusions to hold when removing the End Cover. |

**Precautions for Correct Use**

Always mount an End Cover to the end of the Profinet IO Device Terminal to protect the last NX Unit in the Profinet IO Device Terminal. Not attaching the End Cover may result in malfunction or failure of the Profinet IO Device Terminal.

# 4-2 Indicators

There are indicators to show the current operating status of the PROFINET Coupler Unit.

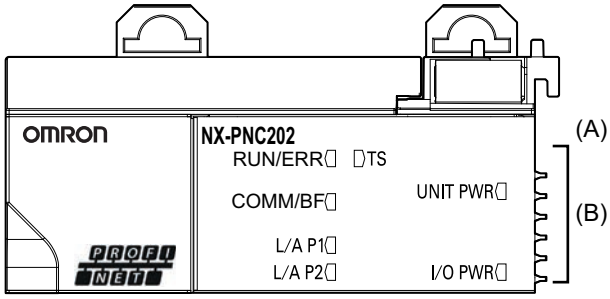


| Letter | Name | Function |
|---|---|---|
| (A) | Model number | The model number of the PROFINET Coupler Unit is shown. |
| (B) | Indicators | The current operating status of the PROFINET Coupler Unit is shown. |

## RUN/ERR

The Run and Error Status (RUN/ERR) indicator indicates the status of the Unit.

| Color | Status | | Meaning |
|---|---|---|---|
| Green | | Lit | The Unit is operating normally. |
| | | Alternating:<br>Green & Red 0.25s *1<br>Not lit 0.25s<br>Duration 3s<br>Timing simultaneously with COMM/BF LED | Device identification when DCP Set/Flush is received. |
| Red | | Lit | One of the following unrecoverable errors was detected.<br>• Bus Controller Error<br>• Non-volatile Memory Hardware Error<br>• Memory Corruption Detected |
| | | Flashing | One of the following nonfatal errors was detected.<br>• Unit Configuration Verification Error<br>• Non-volatile Memory Control Parameter Error<br>• Unit Configuration Information Error<br>• Unit Configuration Error, Too Many Units<br>• Unit Configuration Error, Unsupported Configuration<br>• NX Unit Communications Timeout<br>• NX Unit Initialization Error<br>• NX Unit Startup Error |
| --- | | Not lit | • No Unit power supply<br>• Busy with reset<br>• Waiting for initial start of processing |

*1. Both lights mix and therefor the color is orange or yellow.

## COMM/BF Indicator

The Communication / Bus Failure (COMM/BF) indicator indicates the status of the network.

| Color | Status | | Meaning |
|---|---|---|---|
| Green | | Lit | Cyclic data exchange active with a PROFINET IO Controller. |
| | | Alternating:<br>Green & Red 0.25s*1<br>Not lit 0.25s<br>Duration 3s<br>Timing simultaneously with RUNN/ERR LED | Device identification when DCP Set/Flush is received. |
| Red | | Flashing | The communication coupler has rejected the last connection attempt of a PROFINET IO Controller |
| | | Lit | Waiting for a PROFINET IO Controller to connect |
| --- | | Not lit | No Unit power supply |

*1. Both lights mix and therefor the color is orange or yellow.

## TS Indicator

The TS indicator shows the status of the PROFINET Coupler Unit and the communications status between the PROFINET Coupler Unit and the NX Units.

| Color | Status | | Meaning |
|---|---|---|---|
| Green | | Lit | • Unit operates normally.<br>• Communication with all connected NX Units.<br>• A correct NX Unit configuration is downloaded in the Unit from the Sysmac Studio. |
| | | Flashing at 1.0 sec intervals | • PROFINET communication not available for all NX Units based on the stored configuration.<br>• Initializing NX Units.<br>• Communication is not established for all NX units. |
| | | Flashing at 0.5 sec intervals | Unit is operating in automatic configuration mode (the unit configuration was automatically created). |
| Red | | Lit | • Non-volatile Memory Hardware Error<br>• Bus Controller Error<br>• Non-volatile Memory Control Parameter Error<br>• Unit Configuration Error<br>• Unit Configuration Information Error<br>• Unit Configuration Verification Error<br>• Memory Corruption Detected<br>• NX Unit Startup Error<br>• Any other error that requires replacement of the PROFINET Coupler Unit |
| | | Flashing at 0.5 sec intervals | • NX Unit Communications Timeout<br>• NX Unit Initialization Error |
| --- | | Not lit | • No Unit power supply |

## UNIT PWR Indicator

The UNIT PWR indicator shows the status of the Unit power supply.

| Color | Status | | Meaning |
|---|---|---|---|
| Green | | Lit | Unit power supplied |
| --- | | Not lit | No Unit power supply |

## IO PWR Indicator

The IO PWR indicator shows the status of the IO power supply.

| Color | Status | | Meaning |
|---|---|---|---|
| Green | | Lit | IO power supplied |
| --- | | Not lit | No IO power supply |

## L/A P1 Indicator

The Port 1 Link/Activity (L/A) indicator shows the linked status and the PROFINET communication status for Port 1.

| Color | Status | | Meaning |
|---|---|---|---|
| Green | | Lit | Link established |
| | | Flickering | • Link established<br>• Communications are active |
| --- | | Not lit | No link established |

## L/A P2 Indicator

The Port 2 Link/Activity (L/A) indicator shows the linked status and the PROFINET communication status for Port 2.

| Color | Status | | Meaning |
|---|---|---|---|
| Green | | Lit. | Link established |
| | | Flickering | • Link established<br>• Communications are active |
| --- | | Not lit. | No link established |

# 4-3 Hardware Switch Settings

This section describes the functions of the hardware switches (i.e., the rotary switches and the DIP switch) on the front panel of the PROFINET Coupler Unit.

## Rotary Switches

Not used.

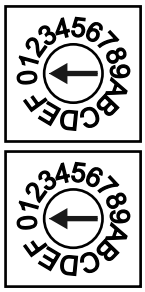


## Dip Switches

Not used.
Keep all dip switches in the OFF position.

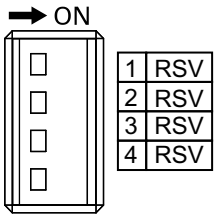

# 4-4 Communications Connector and Peripheral USB Port

This section provides the specifications of the communications connectors and peripheral USB port on the front panel of the PROFINET Coupler Unit.

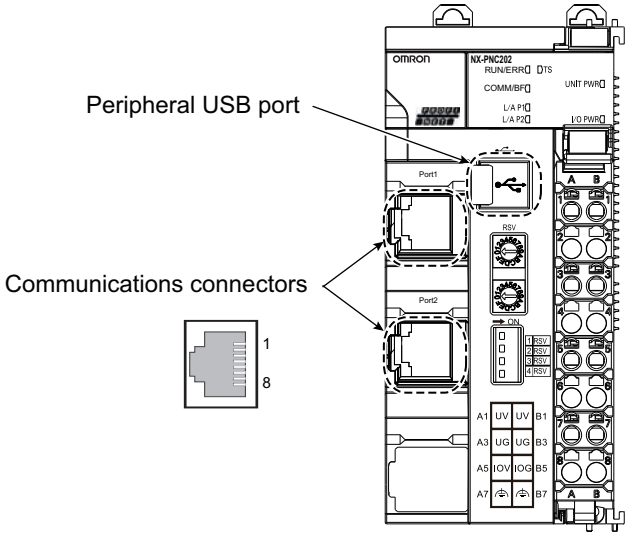


## Communications Connectors

Connect Ethernet cables to the communications connectors. The specifications of the Ethernet communications connectors are given below.

- Electrical specifications: Conform to IEEE 802.3 standards.
- Connector structure: RJ45 8-pin Modular Connector (Conforms to ISO 8877).

## Peripheral USB Port

This port is used to connect to the Sysmac Studio. You can use a USB cable (connector type: B) to directly connect the PROFINET Coupler Unit to the Sysmac Studio to enable setting up the Profinet IO Device Terminal.

# 4-5 Terminal Blocks

The terminal block on the PROFINET Coupler Unit is a removable screwless clamping terminal block that allows you to easily connect and remove the wiring.

The Unit power supply, IO power supply, and ground wire are connected to this screwless clamping terminal block.

For details, refer to *7-2 Connecting the Power Supply and Ground Wires* on page 7-6.

## Terminal Block Part Names and Functions

NX-TBC082

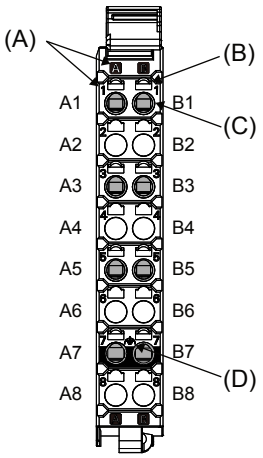


8-terminal type

| Letter | Name | Function |
|---|---|---|
| (A) | Terminal number indications | The terminal numbers (A1 to A8 and B1 to B8) are displayed.<br>The terminal number indications are the same regardless of the number of terminals on the terminal block. |
| (B) | Release holes | Insert a flat-blade screwdriver into these holes to connect and remove the wires. |
| (C) | Terminal holes | The wires are inserted into these holes. |
| (D) | Ground terminal mark | This mark indicates the ground terminals. |

Terminal blocks come in three types depending on the number of terminals that can be used. There are 8-terminal type, 12-terminal type, and 16-terminal type. Only an 8-terminal type can be mounted to the PROFINET Coupler Unit. To prevent incorrect wire insertion, other terminal blocks cannot be mounted.

**Additional Information**

On 8-terminal type of terminal blocks, the following terminals do not have terminal holes and release holes: A2, A4, A6, A8, B2, B4, B6, and B8.

## Applicable Terminal Blocks for Each Model

The terminal blocks that you can use with each model of the PROFINET Coupler Unit are given in the following table.

| Unit model number | Terminal block | | | |
|---|---|---|---|---|
| | Terminal block model number | Number of terminals | Ground terminal mark | Terminal current capacity |
| NX-PNC202 | NX-TBC082 | 8 | Present | 10 A |

**Precautions for Correct Use**

Do not use the NX-TBA081 Terminal Block. The terminal current capacity of 4 A for that type is not sufficient for the NX-PNC202.

To differentiate between the two models of terminal blocks, use the terminal number column indications. The terminal block with white letters on a dark background is the NX-TBC082.

**Additional Information**

Refer to *A-2 Terminal Block Model Numbers* on page A-4 for the screwless clamping terminal blocks for PROFINET Coupler Unit.

# 4-6 DIN Track Contact Plate

There is a DIN Track contact plate in the section on the back of the PROFINET Coupler Unit that comes into contact with the DIN Track.

This plate is connected internally to the functional ground terminal on PROFINET Coupler Unit. This means that the functional ground terminal will be electrically connected to the DIN Track.

For details, refer to *7-2-3 Grounding the PROFINET IO Device Terminal* on page 7-7.

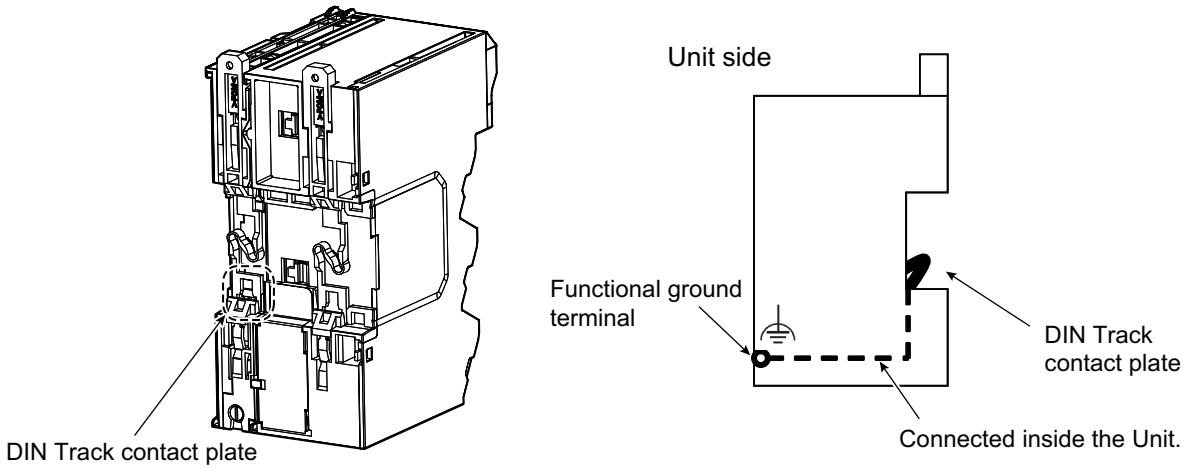

# 5

# Designing the Power Supply System

This section describes how to design the power supply system for the Profinet IO Device Terminal.


**5-1 Power Supply System and Design Concepts . . . . . 5-2**
- 5-1-1 Power Supply System and Types of Power Supplies . . . . . 5-2
- 5-1-2 NX-series Power Supply-related Units . . . . . 5-3
- 5-1-3 Design Concepts for Power Supply to the PROFINET IO Device Terminal . . . 5-5

**5-2 Designing the NX Unit Power Supply System . . . . . 5-6**
- 5-2-1 Procedure for Designing the NX Unit Power Supply System . . . . . 5-6
- 5-2-2 Calculation Example for the NX Unit Power Supply . . . . . 5-7

**5-3 Designing the IO Power Supply System . . . . . 5-9**
- 5-3-1 IO Power Supply Method . . . . . 5-9
- 5-3-2 Designing the IO Power Supply from the NX Bus . . . . . 5-10
- 5-3-3 Designing the IO Power Supply from External Sources . . . . . 5-14
- 5-3-4 Restrictions on Inrush Current for ON/OFF Operation . . . . . 5-14

**5-4 Selecting External Power Supplies and Protective Devices . . . . . 5-16**
- 5-4-1 Selecting the Unit Power Supply . . . . . 5-16
- 5-4-2 Selecting the IO Power Supplies . . . . . 5-18
- 5-4-3 Selecting Protective Devices . . . . . 5-18

# 5-1 Power Supply System and Design Concepts

This section describes the power supply system for a Profinet IO Device Terminal and the design concepts.

## 5-1-1 Power Supply System and Types of Power Supplies

### Power Supply System Configuration Diagram

An example of a power supply system configuration diagram for a Profinet IO Device Terminal is shown below.

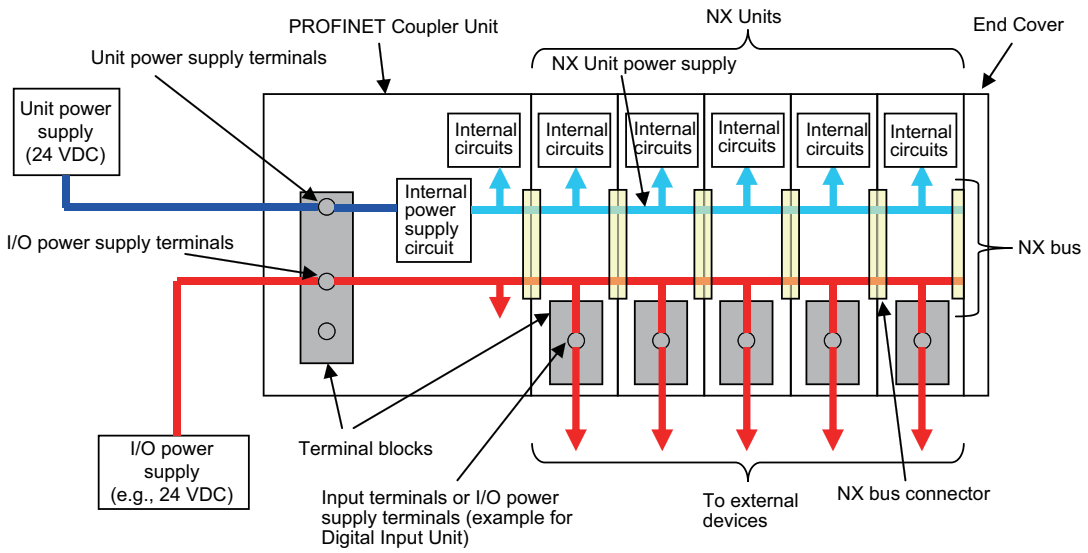


### Power Supply Types

There are the following two types of power supplies that supply power to the Profinet IO Device Terminal.

| Power supply type | Description |
|---|---|
| Unit power supply | This power supply is required to generate the NX Unit power, which is necessary for the Profinet IO Device Terminal to operate. This power supply is connected to the Unit power supply terminals on the PROFINET Coupler Unit.<br>The internal power supply circuit in the PROFINET Coupler Unit generates the NX Unit power supply from the Unit power supply. The internal circuits of the PROFINET Coupler Unit and of the NX Units operate on the NX Unit power supply.<br>The NX Unit power is supplied to the NX Units in the IO Device Terminal through the NX bus connectors. |
| IO power supply | This power supply drives the internal IO circuits of the NX Units and it is used for the connected external devices. This power supply is connected to the IO power supply terminals on the PROFINET Coupler Unit. The IO power is supplied to the NX Units from the IO power supply terminals and through the NX bus connectors. |

**Precautions for Correct Use**

Always use separate power supplies for the Unit power supply and the IO power supply. If you supply power from the same power supply, noise may cause malfunctions.

## 5-1-2 NX-series Power Supply-related Units

The PROFINET Coupler Unit supplies the NX Unit power and IO power to the NX Units in the IO Device Terminal. The Units that are related to power supply for the NX Series other than the PROFINET Coupler Unit are listed in the following table.

For the specifications of NX-series power supply-related Units, refer to the *NX-series System Units User's Manual* (Cat. No. W523). For information on the most recent lineup of NX Series power supply-related Units, refer to NX-series catalogs or OMRON websites, or ask your OMRON representative.

| Unit name | Function |
|---|---|
| Additional NX Unit Power Supply Unit | This NX Unit provides NX Unit power supply.<br>This NX Unit is used when the total power consumption of the NX Units in the IO Device Terminal exceeds the NX Unit power supply capacity of the PROFINET Coupler Unit.<br> 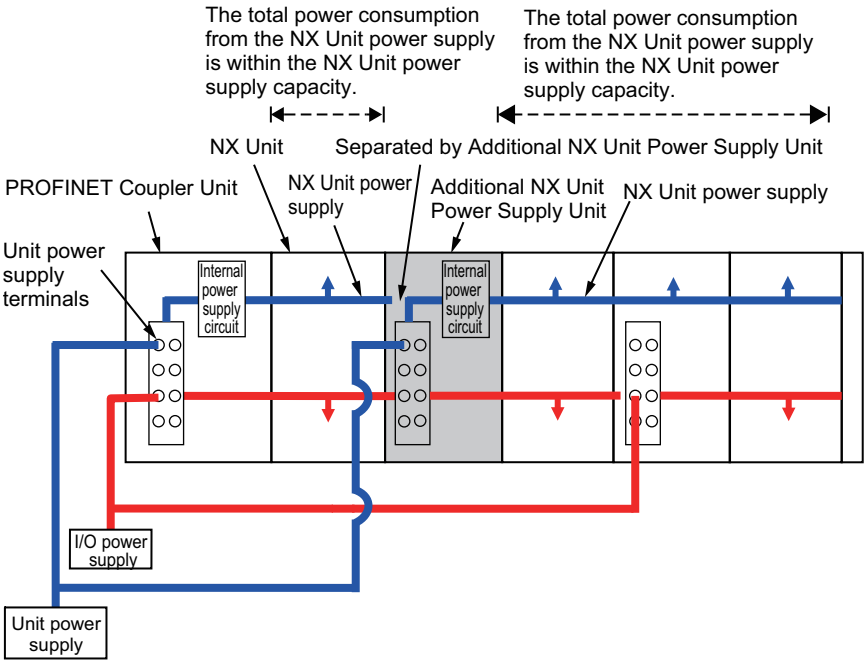 <br><br>The IO power supply for the Additional NX Unit Power Supply Unit is connected to the NX Unit on the left through the NX bus connector. |

| Unit name | Function |
|---|---|
| Additional IO Power Supply Unit | This NX Unit provides additional IO power supply.<br>Use this NX Unit in the following cases.<br>(a) When the IO power supply capacity is insufficient<br>• When the total current consumption for the IO power supply exceeds the maximum IO power supply current of the PROFINET Coupler Unit<br>• When a voltage drop in the IO power supply causes the voltage of the IO power supply to go below the voltage specifications of the IO circuits or connected external devices<br>(b) Separating the IO power supply<br>• When connected external devices have different IO power supply voltages<br>• When separating the power supply systems<br>Case (a)<br> 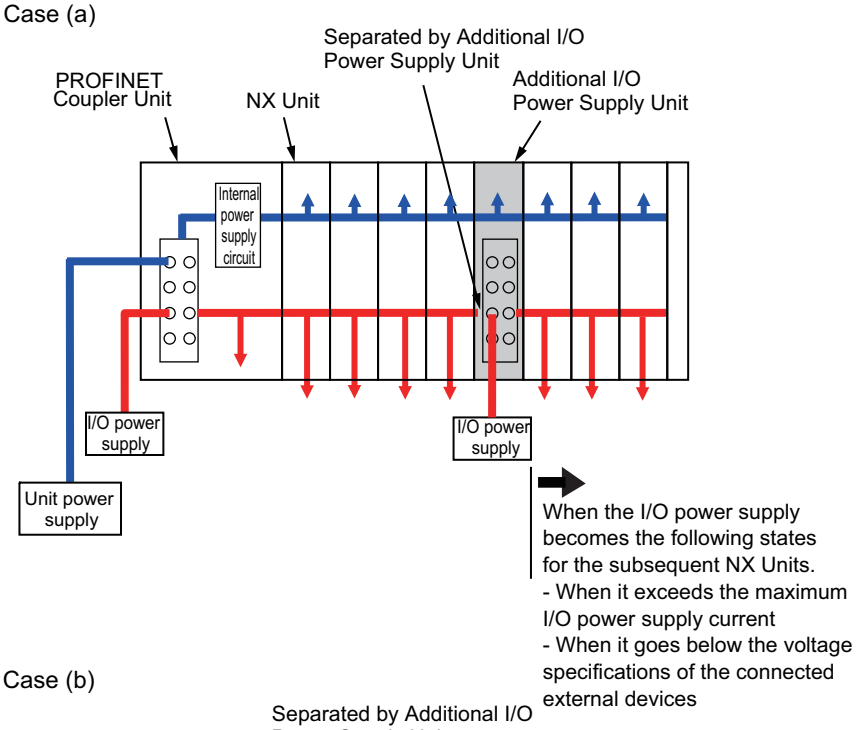 <br><br>Case (b)<br> 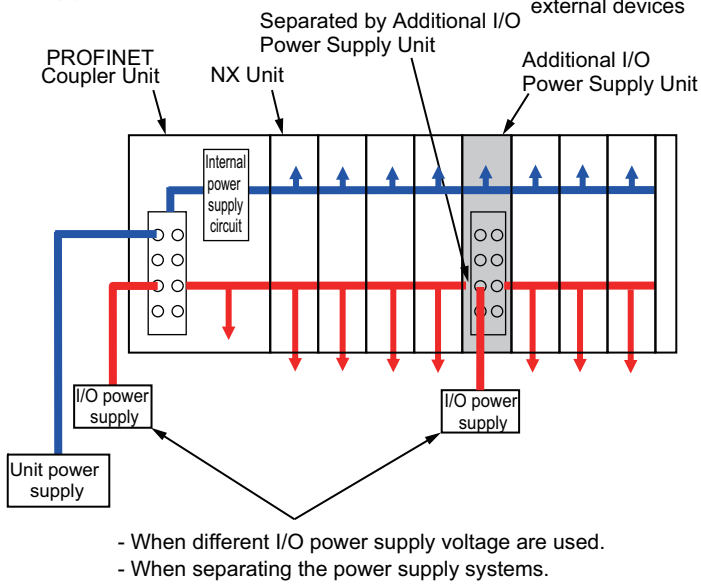 <br><br>The NX Unit power supply of the Additional IO Power Supply Unit is connected to the NX Unit on the left through the NX bus connector. |

| Unit name | Function |
|---|---|
| IO Power Supply Connection Unit | This NX Unit is used when there are not enough IO power supply terminals for the connected external devices that are connected to NX Units such as Digital IO Units and Analog IO Units. 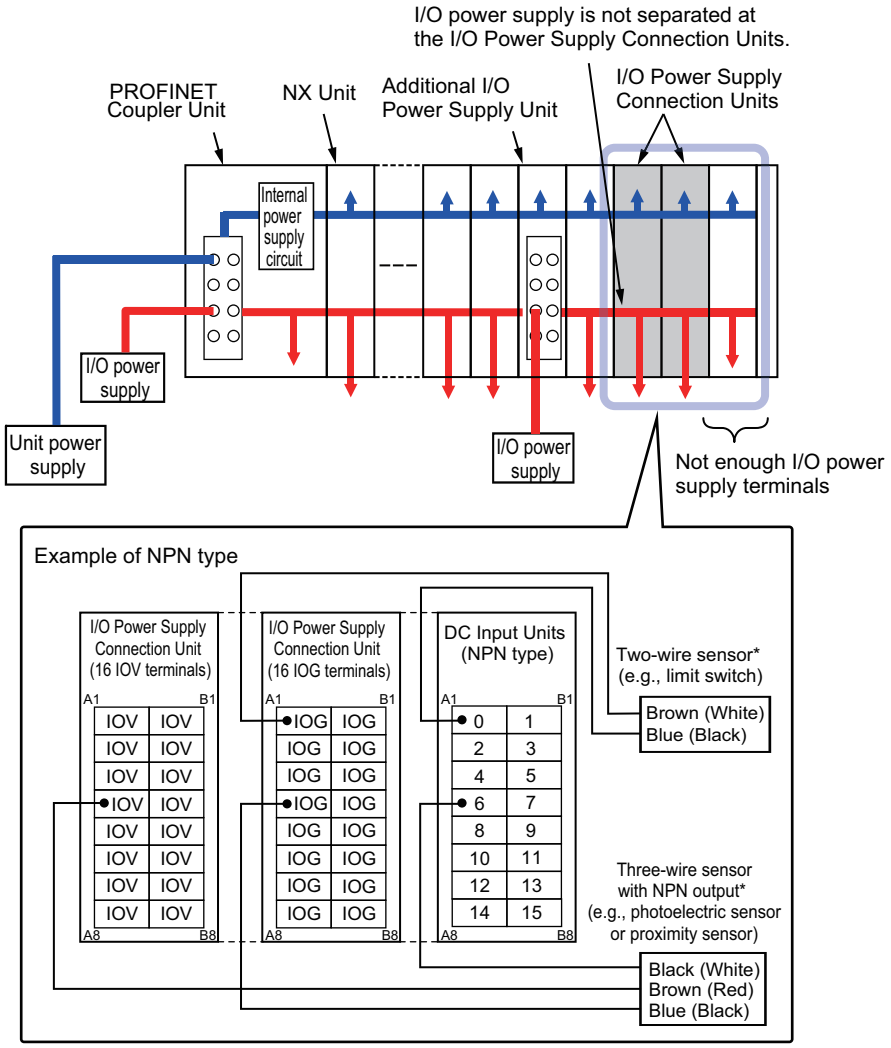  * Wire colors have been changed according to revisions in the JIS standards for photoelectric and proximity sensors. The colors in parentheses are the wire colors prior to the revisions. |

## 5-1-3 Design Concepts for Power Supply to the PROFINET IO Device Terminal

The following must be studied when designing the power supply system to the Profinet IO Device Terminal.

- The NX Unit power supply and IO power supply systems must be designed and then the design conditions for both must be confirmed.
- The external power supplies (i.e., Unit power supply and IO power supplies) must be selected.

# 5-2 Designing the NX Unit Power Supply System

This section describes how to design the NX Unit power supply to the Profinet IO Device Terminal.

## 5-2-1 Procedure for Designing the NX Unit Power Supply System

The total power consumption from the NX Unit power supply must not exceed the NX Unit power supply capacity of the Unit that supplies the NX Unit power.

Use the following procedure to design the NX Unit power supply.

1. Calculate the total power consumption from the NX Unit power supply that is required by the NX Units that are connected to the PROFINET Coupler Unit.
2. If the total power consumption from the NX Unit power supply exceeds the NX Unit power supply capacity of the PROFINET Coupler Unit, add an Additional NX Unit Power Supply Unit to the right of an NX Unit before the capacity is exceeded.
3. Calculate the total power consumption from the NX Unit power supply that is required by the NX Units that are connected after the Additional NX Unit Power Supply Unit.
   If the total power consumption of those NX Units exceeds the NX Unit power supply capacity of the Additional NX Unit Power Supply Unit, add another Additional NX Unit Power Supply Unit to the right of an NX Unit before the capacity is exceeded.
4. Repeat step 3 until the design conditions for the NX Unit power supply are met.

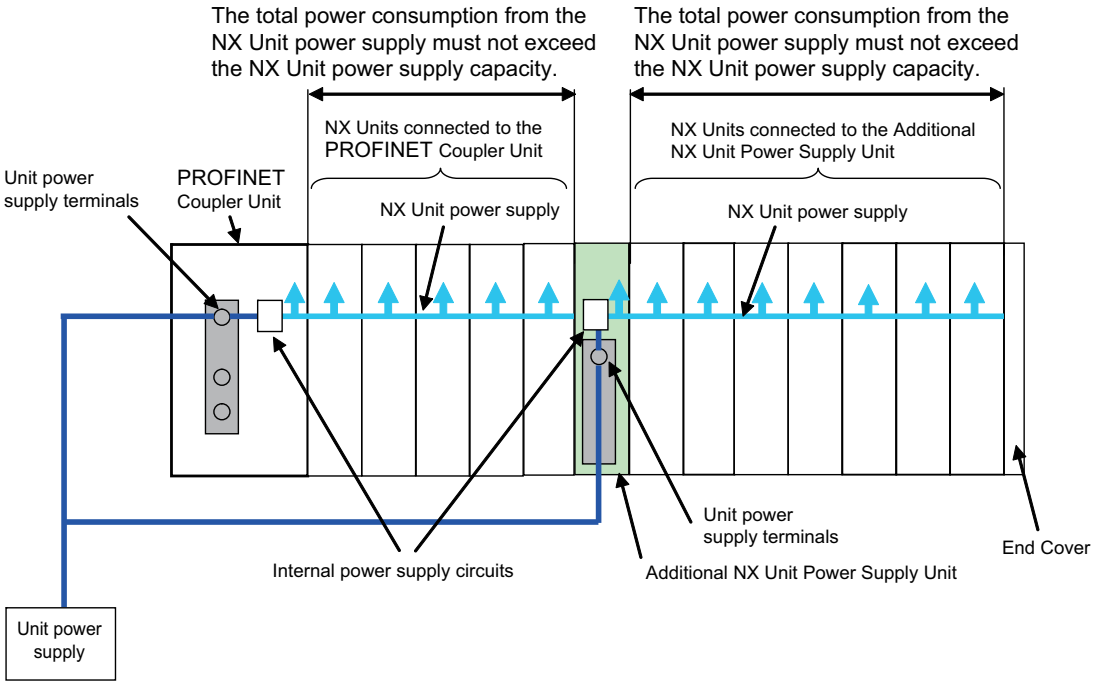

### NX Unit Power Supply Capacity and Restrictions

The internal power supply circuits of the PROFINET Coupler Unit or Additional NX Unit Power Supply Unit supply the NX Unit power to the NX Units.

The NX Unit power supply capacity does not include the NX Unit power consumption of the PROFINET Coupler Unit or Additional NX Unit Power Supply Units.

The NX Unit power supply capacity of the PROFINET Coupler Unit is restricted by the following application conditions.

- Ambient operating temperature
- Installation orientation

Consider these conditions and determine the required NX Unit power supply capacity, and then design the NX Unit power supply system.

Refer to *3-1-3 PROFINET Coupler Unit Specifications* on page 3-4 for restrictions on the PROFINET Coupler Unit.

For restrictions on the Additional NX Unit Power Supply Unit, refer to the *NX-series System Units User's Manual* (Cat. No. W523).

**Precautions for Correct Use**

- Do not exceed the NX Unit power supply capacity. If you exceed the NX Unit power supply capacity, malfunction may occur.
- Use the same Unit power supply to supply the Unit power to the entire IO Device Terminal. If you supply power from different Unit power supplies, differences in electrical potential may cause unexpected currents in the NX Unit power supply, which may result in failure or malfunction.

## 5-2-2 Calculation Example for the NX Unit Power Supply

This section provides a calculation example for the NX Unit power supply.

### Unit Configuration Example

| Name | Model | Quantity | Power consumption/Unit |
|---|---|---|---|
| PROFINET Coupler Unit | NX-PNC202 | 1 | 1.60 W |
| Digital Input Unit | NX-ID3317 | 5 | 0.5 W |
| Relay Output Unit | NX-OC2633 | 5 | 0.8 W |

### Application Conditions

The ambient operating temperature is 55°C and an upright installation orientation is used.

### Calculating the Total Power Consumption from the NX Unit Power Supply

Calculate the total power consumption from the NX Unit power supply that is required by the NX Units that are connected to the PROFINET Coupler Unit. The NX Unit power consumption of the PROFINET Coupler Unit is not included in this calculation.

Total power consumption from NX Unit power supply [W] = (0.5 W × 5) + (0.8 W × 5) = 6.5 W

### Confirming the NX Unit Power Supply Capacity of the PROFINET Coupler Unit

According to the graph in *Installation orientation and restrictions* on page 3-5 in *3-1-3 PROFINET Coupler Unit Specifications* on page 3-4, the NX Unit power supply capacity is 8.5 W max. Therefore, in this example, the total power consumption from the NX Unit power supply is 6.5 W, and the NX Unit power supply capacity is 8.5 W max., so the design conditions are met.

**Additional Information**

Excess or insufficiency in the NX Unit power supply capacity can be easily checked when the Unit configuration is created on the Edit IO Device Terminal Configuration Tab Page on the Sysmac Studio. Use the following procedure to check the power supply capacity.

On the Edit IO Device Terminal Configuration Tab Page on the Sysmac Studio, select the Unit to supply NX Unit power. The power that is supplied by the NX Unit power supply (i.e., the total power consumption) and the power supply capacity are displayed for the Supply Power/Available Power parameter. The following example is for when the PROFINET Coupler Unit is selected.

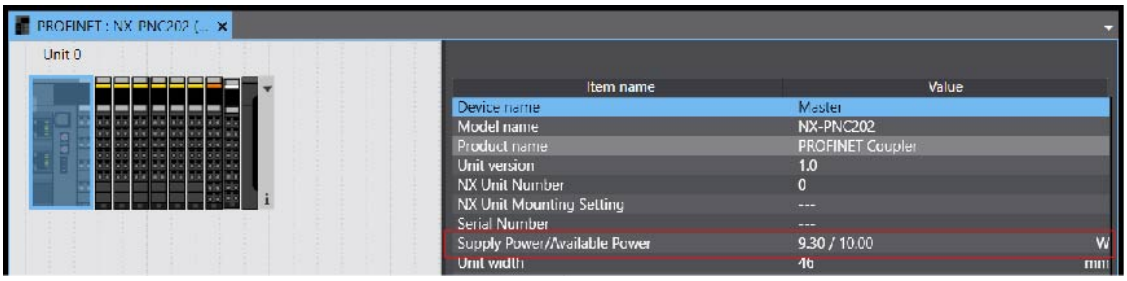


If the power to supply exceeds the NX Unit power supply capacity of the Unit that is selected to supply the NX Unit power, a yellow warning icon is displayed by the first NX Unit for which there is not sufficient capacity and also by all the remaining NX Units.

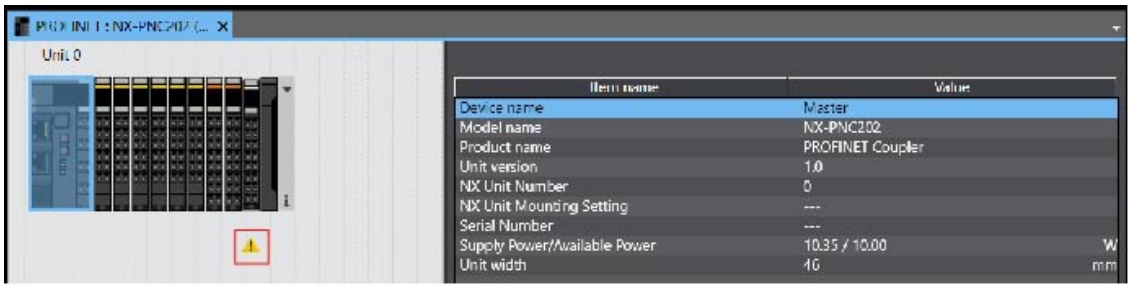


However, the Sysmac Studio determines excess and insufficiency in the supplied power for an NX Unit power supply capacity of 10 W max. It does not consider the power supply restrictions of the NX Unit power supply in actual application conditions and IO power supply design conditions. When actually designing the power supply, refer to *5-2-1 Procedure for Designing the NX Unit Power Supply System* on page 5-6 and *5-3-2 Designing the IO Power Supply from the NX Bus* on page 5-10.

# 5-3 Designing the IO Power Supply System

This section describes how to design the IO power supply to the Profinet IO Device Terminal.

## 5-3-1 IO Power Supply Method

There are the following two methods to supply the IO power supply to the Profinet IO Device Terminal depending on the type and model of the NX Units.

| Supply method | Description |
|---|---|
| Supply from the NX bus | Power is supplied through the NX bus connectors by connecting an IO power supply to the IO power supply terminals on the PROFINET Coupler Unit or Additional IO Power Supply Units. |
| Supply from external source | Power is supplied to the Units from an external source.<br>IO power is supplied by connecting an IO power supply to the terminal blocks on the Units. |

Refer to the user's manuals for individual NX Units or to the *NX-series Data Reference Manual* (Cat. No. W525) for the power supply method for specific NX Units.

An example is shown below.

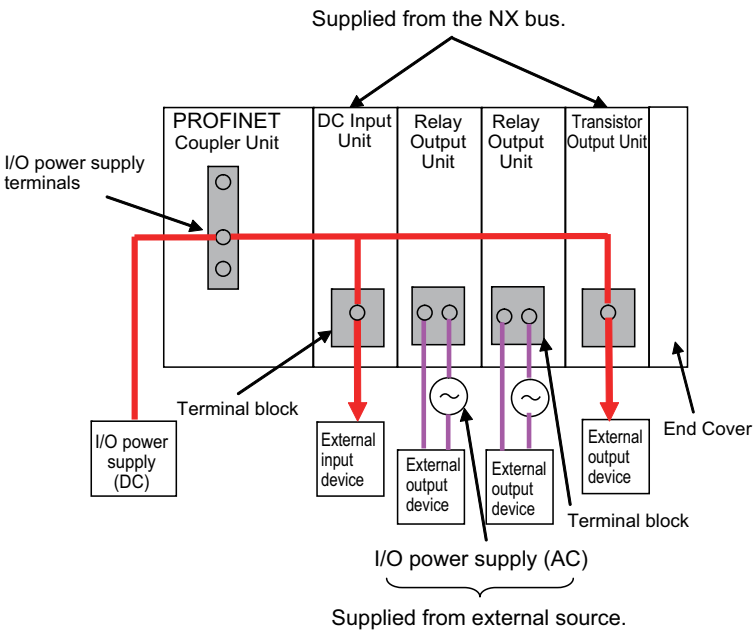

## 5-3-2 Designing the IO Power Supply from the NX Bus

### Procedure for Designing the IO Power Supply

Make sure that the following design conditions are met when you design the IO power supply from the NX bus.

- The total current consumption from the IO power supply must not exceed the maximum IO power supply current of the Unit that supplies the IO power.
- The voltage drop in the IO power supply must be within the voltage specifications of the IO circuits of the NX Units and the connected external devices.

Use the following procedure to design the IO power supply.

**1** Calculate the total current consumption from the IO power supply of the PROFINET Coupler Unit and the NX Units that are connected to the PROFINET Coupler Unit, and calculate the voltage drop in the IO power supply.

**2** If either of the following items (a) and (b) is true, add an Additional IO Power Supply Unit to the right of an NX Unit for which (a) and (b) are not true.

(a) The total current consumption for the IO power supply exceeds the IO power supply capacity of the PROFINET Coupler Unit.

(b) Voltage drop in the IO power supply causes the voltage of the IO power supply to go below the voltage specifications of the IO circuits of the NX Units or the connected external devices.

**3** Calculate the voltage drop in the IO power supply after the Additional IO Power Supply Unit and the total current consumption from the IO power supply that is required by the Additional IO Power Supply Unit and by the NX Units that are connected after the Additional IO Power Supply Unit.
If either of the following items (a) and (b) is true, add another Additional IO Power Supply Unit to the right of an NX Unit for which (a) and (b) are not true.

(a) The total current consumption for the IO power supply exceeds the IO power supply capacity of the Additional IO Power Supply Unit.

(b) Voltage drop in the IO power supply causes the voltage of the IO power supply to go below the voltage specifications of the IO circuits of the NX Units or the connected external devices.

**4** Repeat step 3 until the design conditions for the IO power supply are met.

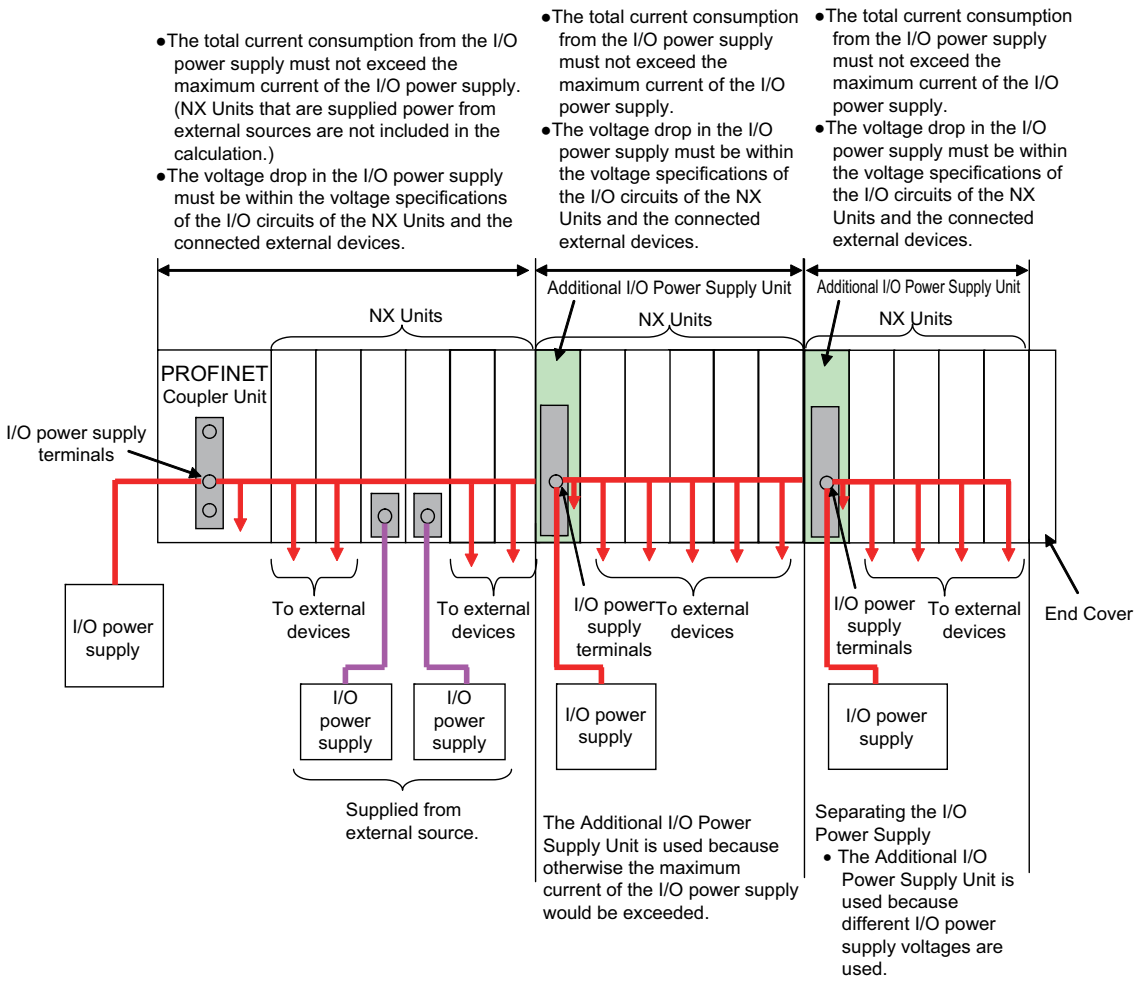


### ● Maximum IO Power Supply Current

The maximum IO power supply current is the maximum current that the IO power supply that is connected to the PROFINET Coupler Unit or Additional IO Power Supply Unit can supply through the NX bus connectors to the NX Units. For the maximum IO power supply current of the PROFINET Coupler Unit, refer to *3-1-3 PROFINET Coupler Unit Specifications* on page 3-4. For the maximum IO power supply current of the Additional IO Power Supply Unit, refer to the *NX-series System Units User's Manual* (Cat. No. W523).

## Calculating the Total Current Consumption from the IO Power Supply

The total current consumption from the IO power supply from the NX bus is the total of the following current consumptions.

- The current consumption from the IO power supply that is required for the PROFINET Coupler Unit or the Additional IO Power Supply Unit, and for the NX Units that are connected to the PROFINET Coupler Unit or Additional IO Power Supply Unit
- The current consumption between the NX Units and the connected external devices

| Current consumption item | Description |
|---|---|
| Current consumption from IO power supply | This is the current that is consumed by the internal circuits that operate on the IO power supply.<br>Specific values are given in the user's manuals for individual Units. |

| Current consumption item | Description |
|---|---|
| Current consumption between the NX Units and the connected external devices | This is the current that is consumed between the NX Units and the connected external devices.<br>For example, this is the current consumed by a Digital Input Unit to supply power to photoelectric sensors or to turn ON the input circuits in the Digital Input Unit.<br>The current consumption depends on the type of IO circuit in the NX Unit, the number of IO points that are used, and the current consumption of the connected external device. It must be calculated for each NX Unit. |

### ● Calculation Examples

Examples of calculating the current consumption from the IO power supply are given below for a Digital Input Unit and Digital Output Unit.

| | | |
|---|---|---|
| Current consumption of Digital Input Unit | = | Current consumption from IO power supply + (Input current × Number of inputs used) + Total current consumption of connected input devices |

| | | |
|---|---|---|
| Current consumption of Digital Output Unit | = | Current consumption from IO power supply + Total load current of connected loads + Total current consumption of connected output devices |

## Calculating the Voltage Drop in the IO Power Supply

Voltage drop occurs in the Profinet IO Device Terminal due to the contact resistance at the points where Units are connected to each other. Design the IO power supply system to maintain the voltage specifications of the NX Unit IO circuits and connected external devices even if the voltage of the IO power supply drops.

As shown in the following table, the voltage drop per Unit depends on the total current consumption from the IO power supply. However, the total current consumption from the IO power supply must not exceed the maximum IO power supply current of the Unit that supplies the IO power.

| Total current consumption from the IO power supply | Voltage drop per Unit |
|---|---|
| 10 A | 0.20 V |
| 8 A | 0.16 V |
| 6 A | 0.12 V |
| 4 A | 0.08 V |
| 3 A | 0.06 V |
| 2 A | 0.04 V |
| 1 A | 0.02 V |

Here, the following Unit configuration example is used to show how to calculate the IO power that is supplied by the PROFINET Coupler Unit. The same method can be used to calculate the IO power supply from an Additional IO Power Supply Unit.

Example:

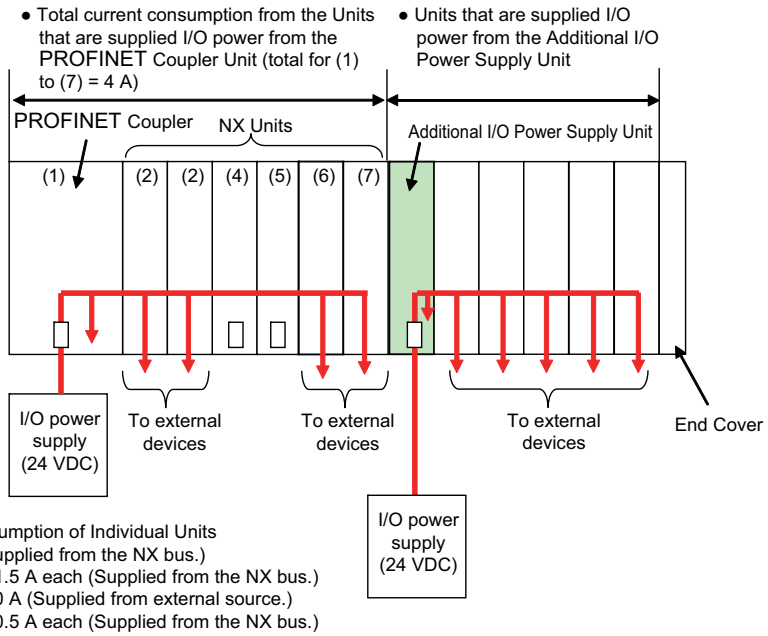


*1. The current consumption of the PROFINET Coupler Unit is not actually 0 A. However, a value of 0 A is used in this calculation example.
In actual calculations, use the current consumption from the IO power supply that is given elsewhere in this manual.

### ● Outline

Find the IO power supply voltage of the NX Unit that is the farthest from the PROFINET Coupler Unit. In this example, the IO power supply voltage of Unit (7) is found.

### ● Conditions

Assume that an IO power supply voltage of 24.00 VDC is supplied to the IO power supply terminals on the PROFINET Coupler Unit.

### ● Procedure

**1** Use the following formula to calculate the total current consumption from the IO power supply.

| | |
|---|---|
| Total current consumption from the IO power supply | =(1) + (2) + (3) + (4) + (5) + (6) + (7)<br>= 0 A + 1.5 A + 1.5 A + 0 A + 0 A + 0.5 A + 0.5 A<br>= 4 A |

**2** Find the IO power supply voltage and make sure that it is within the voltage specifications of the IO circuits of the NX Units and the connected external devices.

| | |
|---|---|
| IO power supply voltage at (7) | = IO power supply voltage on IO power supply terminals − (Voltage drop per Unit × Number of Units passed through)<br>= 24.00 V − 0.08 V × (7 − 1 Units)<br>= 23.52 V |

## Design to Separate the IO Power Supply

If the IO power supply voltages of the connected external devices are different, connect an Additional IO Power Supply Unit at the point where the IO power supply voltage changes and then perform similar calculations to design a system that meets the power supply conditions. The same method is used to separate the power supply systems. Connect an Additional IO Power Supply Unit at the point where the

power supply systems are to be separated and then perform similar calculations to design the overall system to meet the power supply conditions.

## 5-3-3 Designing the IO Power Supply from External Sources

Unlike supplying power from the NX bus, there is no specific design method for supplying IO power from external sources.

Calculate the total current consumption from the IO power supply for the NX Units to be supplied power from an external source.

Refer to the user's manuals of the NX Units for the total current consumption from the IO power supply.

## 5-3-4 Restrictions on Inrush Current for ON/OFF Operation

This section describes the restrictions on inrush current from the IO power supply that occurs when connected external devices turn ON and OFF.

### Inrush Current Restrictions

If inrush current to the IO power supply occurs when a connected external device turns ON or OFF, do not allow the effective value of the IO power supply current to exceed the following rated values when the inrush current is added to the current consumption from the IO power supply.

- Maximum IO power supply current
- Current capacity of power supply terminals for the IO power supply

Do not allow the inrush current to exceed the values given in the following table.

| Unit | Model | Peak value | Pulse width |
|---|---|---|---|
| PROFINET Coupler Unit | NX-PNC202 | 50 A | 1 s |

### Calculating the Effective Value of the IO Power Supply Current

The formula to calculate the effective value of the IO power supply current, Irms, is given below.

$$Irms=\sqrt{Ip^2\times D+Ia^2\times(1-D)}$$
$$(D=\tau/T)$$

- Ip: Peak inrush current (A)
- Irms: Effective value of IO power supply current (A)
- Ia: Total current consumption from the IO power supply (A)
- D: Inrush current duty
- $\tau$: Inrush current pulse width (s)
- T: Inrush current period (s)

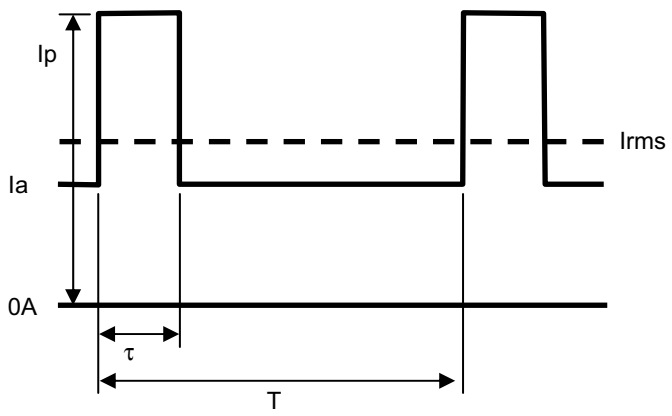
Ip
Irms
Ia
0A
τ
T

# 5-4 Selecting External Power Supplies and Protective Devices

This section describes how to select the external power supplies and protective devices for the Profinet IO Device Terminal, i.e., the Unit power supply and the IO power supplies.

## 5-4-1 Selecting the Unit Power Supply

This section describes how to select the Unit power supply for the Profinet IO Device Terminal.

### Recommended Power Supplies

Use an SELV power supply that meets the following conditions for the Unit power supply.

- Has overcurrent protection.
- Has double or reinforced insulation between the input and output.
- Has an output voltage of 24 VDC (20.4 to 28.8 VDC).

Recommended Power Supplies: S8JX Series (manufactured by OMRON)

### Calculating the Required Power Supply Capacity of the Unit Power Supply

#### ● Formula

This section describes how to calculate the required capacity of the Unit power supply for the Profinet IO Device Terminal.

| | | |
|---|---|---|
| Required capacity of the Unit power supply for the Profinet IO Device Terminal | = | Total of required Unit power supply capacity for each block |

Use the following formula to calculate the required Unit power supply capacity for each block in the Profinet IO Device Terminal.

Required Unit power supply capacity of each block = (A + B)/C

| | |
|---|---|
| A | NX Unit power consumption of the Unit that supplies the NX Unit power |
| B | Total power consumption from the NX Unit power supply that is required by the NX Units that are connected to the Unit that supplies NX Unit power |
| C | NX Unit power supply efficiency of the Unit that supplies the NX Unit power |

## Blocks

A block consists of the Unit that supplies the NX Unit power and the range of Units to which that Unit supplies the NX Unit power. For example, in the configuration in the following figure there are two blocks in the Profinet IO Device Terminal: the block with the PROFINET Coupler Unit and the block with the Additional NX Unit Power Supply Unit.

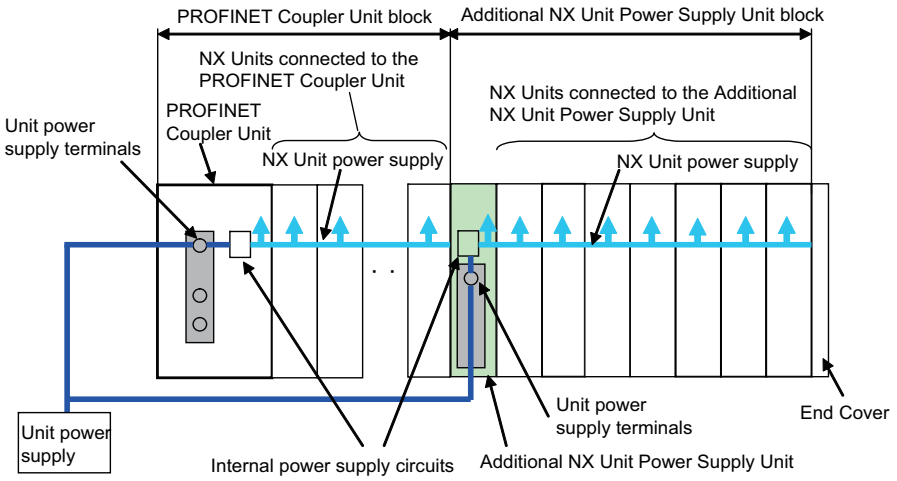


The total of the required Unit power supply capacity for these two blocks is the required power supply capacity of the Unit power supply for the Profinet IO Device Terminal.

### Precautions for Correct Use

Use the same Unit power supply to supply the Unit power to the entire IO Device Terminal. If you supply power from different Unit power supplies, differences in electrical potential may cause unexpected currents in the NX Unit power supply, which may result in failure or malfunction.

## Calculation Example

This section provides a calculation example for the configuration example that is given in *5-2-2 Calculation Example for the NX Unit Power Supply* on page 5-7.

| Name | Model | Quantity | Power consumption/Unit |
|---|---|---|---|
| PROFINET Coupler Unit | NX-PNC202 | 1 | 1.6 W |
| Digital Input Unit | NX-ID3317 | 5 | 0.5 W |
| Relay Output Unit | NX-OC2633 | 5 | 0.8 W |

- The NX Unit power supply efficiency of the PROFINET Coupler Unit is 70%.

In this configuration example, there is only one block, the PROFINET Coupler Unit block.

Required power supply capacity of Unit power supply to Profinet IO Device Terminal

= Required Unit power supply capacity of PROFINET Coupler Unit block

= (Power consumption from NX Unit power supply of PROFINET Coupler Unit + Total power consumption from NX Unit power supply of NX Units connected to PROFINET Coupler Unit)/NX Unit power supply efficiency of PROFINET Coupler Unit

= (1.6 W + (0.5 W × 5) + (0.8 W × 5))/0.7

= Approximately. 11.6 W

**Precautions for Correct Use**

Consider the inrush current when the power supply is turned ON and select a Unit power supply with sufficient extra capacity. The inrush current when power is turned ON may prevent the Unit power supply from operating correctly.

## 5-4-2 Selecting the IO Power Supplies

This section describes how to select the IO power supplies for the Profinet IO Device Terminal.

### Recommended Power Supplies

Use an SELV power supply that meets the following conditions for the IO power supply.

- Has overcurrent protection.
- Has double or reinforced insulation between the input and output.
- Has an output voltage of 5 to 24 VDC (4.5 to 28.8 VDC).

*1. Use an output voltage that is appropriate for the IO circuits of the NX Units and the connected external devices.

Recommended Power Supplies: S8JX Series (manufactured by OMRON)

### Calculating the Required Power Supply Capacity of the IO Power Supply

Use the calculation method that is described in *5-3 Designing the IO Power Supply System* on page 5-9 and calculate the total current consumption from the IO power supply and the required power supply capacity of the IO power supply.

Unlike the Unit power supply, it is not necessary to use only one IO power supply to supply power to the entire IO Device Terminal.

**Precautions for Correct Use**

Consider the inrush current when the power supply is turned ON and select an IO power supply with sufficient extra capacity. The inrush current when power is turned ON may prevent the IO power supply from operating correctly.

## 5-4-3 Selecting Protective Devices

This section describes how to select protective devices (e.g., breakers and fuses) to protect against short circuits and overcurrents in external circuits.

Overcurrent is the current that flows when an excessive load is connected and one of the following ratings is exceeded.

- For the Unit power supply, the rating of the NX Unit power supply capacity or of the current capacity of the power supply terminals
- For the IO power supply, the rating of the maximum IO power supply current or of the current capacity of the power supply terminals

For the above ratings for the PROFINET Coupler Unit, refer to *3-1-3 PROFINET Coupler Unit Specifications* on page 3-4. For the ratings of NX-series power supply-related Units, refer to the *NX-series System Units User's Manual* (Cat. No. W523).

## Selecting Protective Devices

Consider the following items when you select protective devices.

- Protective device specifications (breaking/fusing, detection characteristics, steady current value, etc.)
- Inrush current when power is turned ON
- Inrush current when connected external devices turn ON and OFF*1

*1. Refer to *5-3-4 Restrictions on Inrush Current for ON/OFF Operation* on page 5-14 for information on the inrush current when connected external devices are turned ON and OFF.

For the breaking/fusing time, use protective devices that meet the conditions in the following table.

### For Unit Power Supply

| Current | Breaking/fusing time |
|---|---|
| 6 A | 1 min max. |
| 12 A | 15 s max. |
| 21 A | 5 s max. |
| 30 A | 2.5 s max. |

### For IO Power Supply

The following values apply for a Unit which has 10 A of current capacity of the power supply terminals.

| Current | Breaking/fusing time |
|---|---|
| 14 A | 1 min max. |
| 28 A | 9 s max. |
| 56A | 1.5 s max. |
| 70 A | 0.8 s max. |

The following values apply for a Unit which has 4 A of current capacity of the power supply terminals.

| Current | Breaking/fusing time |
|---|---|
| 6 A | 1 min max. |
| 12 A | 15 s max. |
| 21 A | 5 s max. |
| 30 A | 2.5 s max. |

## Installation Locations for Protective Devices

Install protective devices for the Unit power supply and IO power supply in the locations that are shown in the following figure.

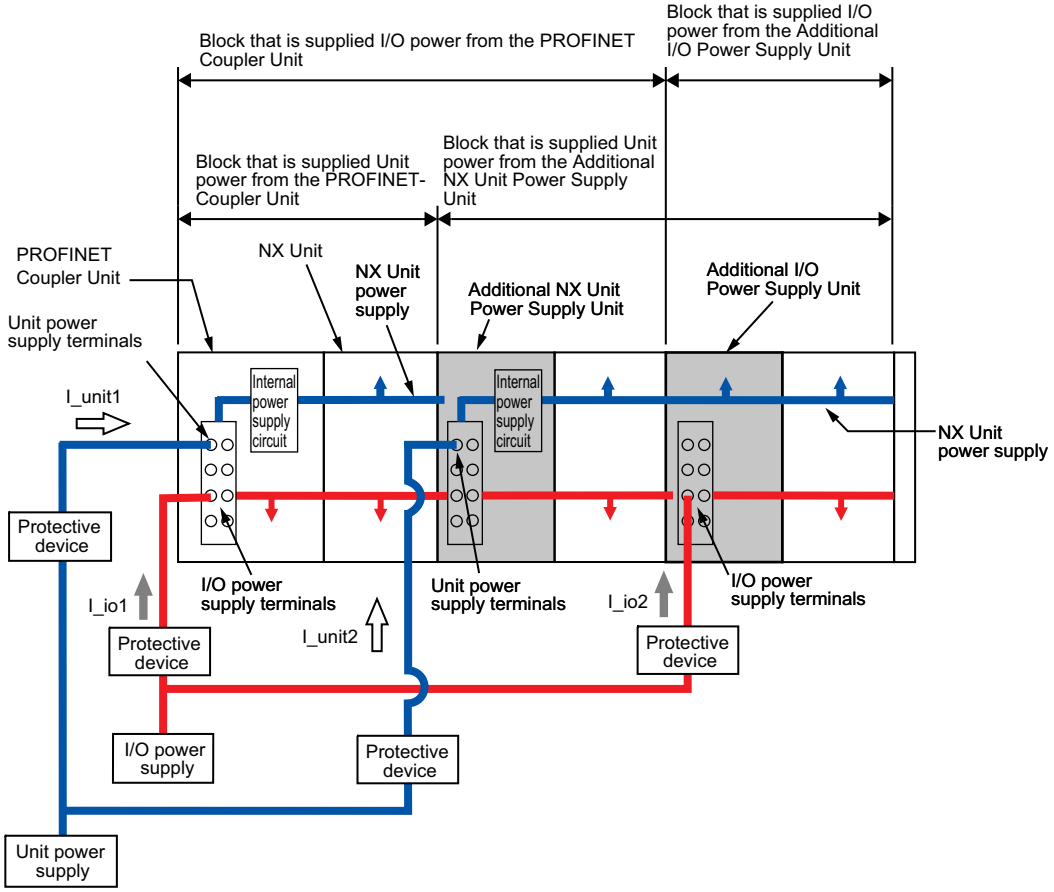


However, fewer protective devices may be required when the current consumption of each block does not exceed the rated current. An example of this is provided below.

- Using Unwired Unit Power Supply Terminals
  In this example, the current consumption from each power supply is as follows:

  Current consumption from Unit power supply: I_unit1 + I_unit2 ≤ Lowest rated current
  Current consumption from IO power supply: I_io1 + I_io2 ≥ Lowest rated current*1

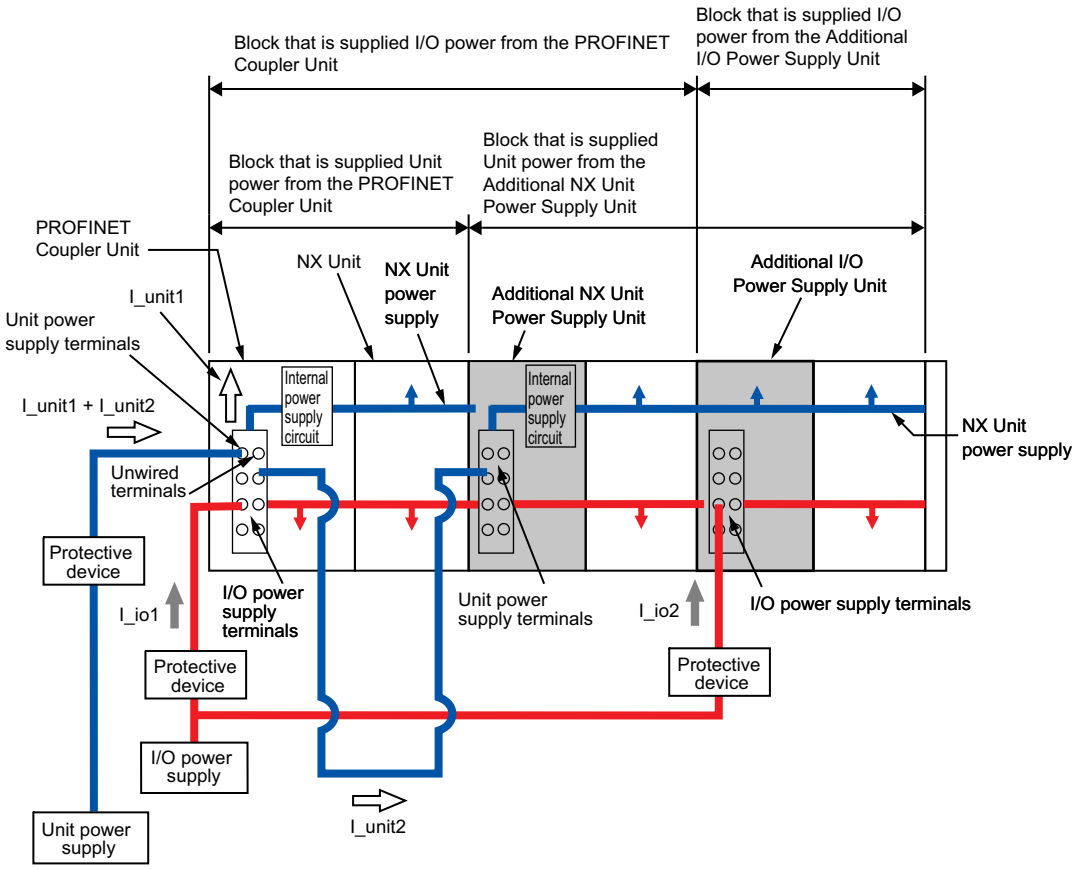


*1. This is the lowest rated current of all of the Units that supply IO power and are connected to protective devices. For example, if terminals with both a 10-A and 4-A capacities are connected, the value is 4 A.

- When Total Current Consumption for All Blocks Does Not Exceed the Rated Current
  In this example, the current consumption from each power supply is as follows:

  Current consumption from Unit power supply: I_unit1 + I_unit2 ≤ Lowest rated current
  Current consumption from IO power supply: I_io1 + I_io2 ≤ Lowest rated current*1

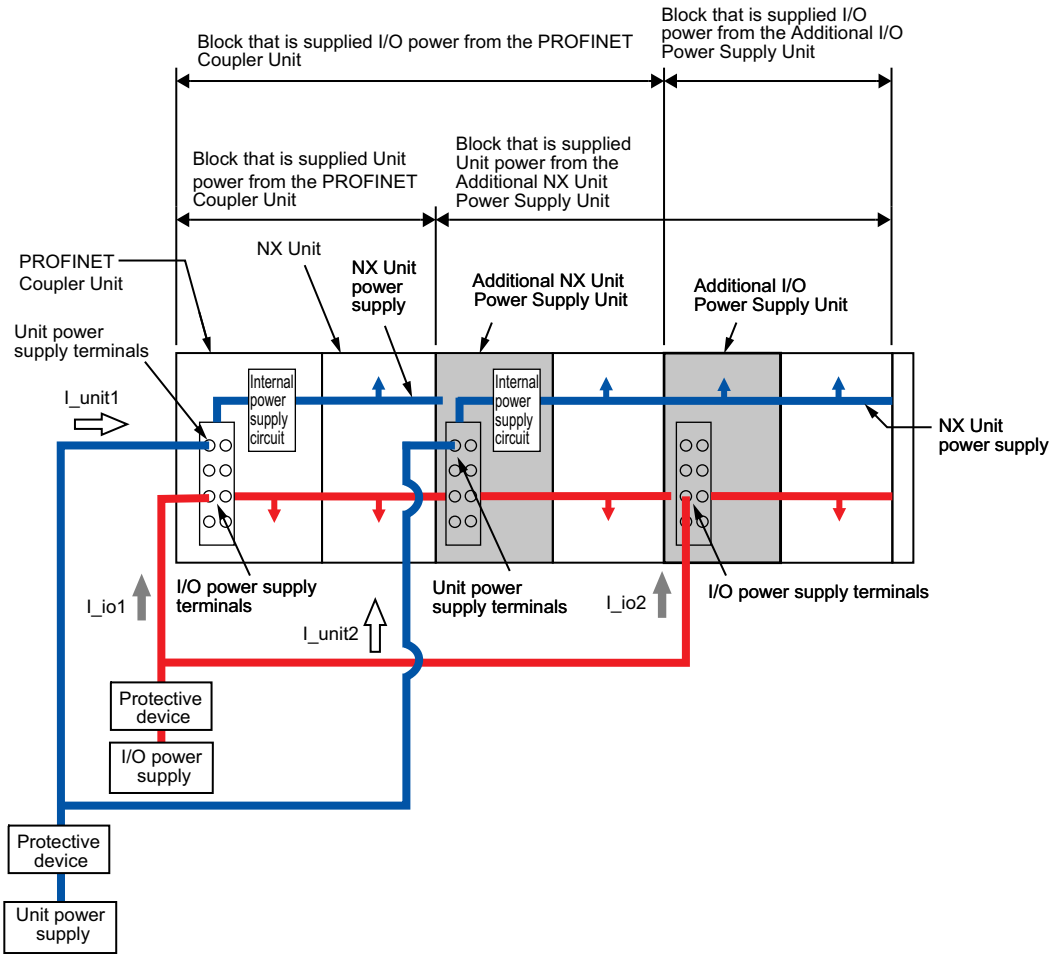


*1. This is the lowest rated current of all of the Units that supply IO power and are connected to protective devices. For example, if terminals with both a 10-A and 4-A capacities are connected, the value is 4 A.

# 6

# Installation

This section describes how to install the Profinet IO Device Terminal.


**6-1 Installing Units . . . . . 6-2**

6-1-1 Installation Precautions . . . . . 6-2
6-1-2 Preparations for Installation . . . . . 6-6
6-1-3 Installation Orientation . . . . . 6-8
6-1-4 Installing the PROFINET Coupler Unit . . . . . 6-9
6-1-5 Installing and Connecting NX Units . . . . . 6-12
6-1-6 Mounting the End Cover . . . . . 6-15
6-1-7 Mounting the End Plates . . . . . 6-16
6-1-8 Attaching Markers . . . . . 6-17
6-1-9 Removing Units . . . . . 6-18
6-1-10 Assembled Appearance and Dimensions . . . . . 6-20

**6-2 Control Panel Installation . . . . . 6-23**

6-2-1 Temperature . . . . . 6-23
6-2-2 Humidity . . . . . 6-25
6-2-3 Vibration and Shock . . . . . 6-25
6-2-4 Atmosphere . . . . . 6-25
6-2-5 Electrical Environment . . . . . 6-25
6-2-6 Grounding . . . . . 6-30

# 6-1 Installing Units

This section describes how to mount Units to a Profinet IO Device Terminal.

## 6-1-1 Installation Precautions

To increase the reliability of the Profinet IO Device Terminal and take complete advantage of its functionality, observe the following precautions.

### Installation Location

Do not install the Profinet IO Device Terminal in the following locations.

- Locations subject to ambient temperatures outside the range of 0 to 55°C
- Locations subject to condensation as the result of severe changes in temperature
- Locations subject to a relative humidity outside the range of 10% to 95%
- Locations subject to corrosive or flammable gases
- Locations subject to excessive dust, salt, and metal powder
- Locations subject to shock or vibration
- Locations subject to direct sunlight
- Locations subject to splashing of water, oils, or chemicals

Take appropriate and sufficient countermeasures when installing the Profinet IO Device Terminal in the following locations.

- Locations subject to static electricity or other forms of noise
- Locations subject to strong electromagnetic fields
- Locations subject to possible exposure to radioactivity
- Locations close to power lines

### Installation in Cabinets or Control Panels

Consider the ambient temperature, accessibility for operation, accessibility for maintenance, noise immunity, and installation orientation when you install the Profinet IO Device Terminal in a cabinet or control panel.

#### ● Temperature Control

The ambient operating temperature of the Profinet IO Device Terminal must be between 0 and 55°C. When necessary, take the following steps to maintain the proper temperature.

- Provide enough space for good air flow.
- Do not install the Profinet IO Device Terminal directly above equipment that generates a large amount of heat such as heaters, transformers, or high-capacity resistors.
- If the ambient temperature exceeds 55°C, install a cooling fan or air conditioner.

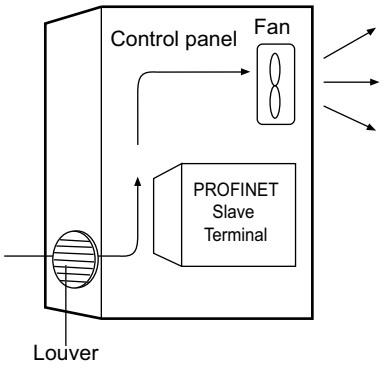


### Accessibility for Operation and Maintenance

- To ensure safe access for operation and maintenance, separate the Profinet IO Device Terminal as much as possible from high-voltage equipment and power machinery.
- If will be easy to operate the Profinet IO Device Terminal if it is mounted at a height of 1.0 to 1.6 m above the floor.

### Improving Noise Immunity

- Do not mount the Profinet IO Device Terminal in a cabinet or control panel containing high-voltage equipment.
- Install the Profinet IO Device Terminal at least 200 mm away from power lines.

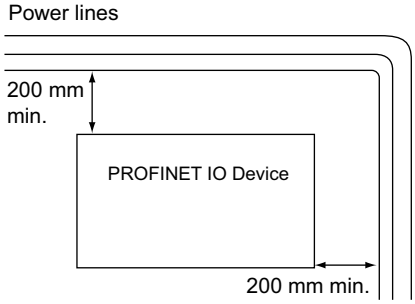


- Ground the mounting plate between the Profinet IO Device Terminal and the mounting surface.

### Installation Orientation

Refer to *6-1-3 Installation Orientation* on page 6-8.

## Installation Method in Control Panels

Mount the Profinet IO Device Terminal on DIN Track if you install it in a cabinet or control panel.

Consider the width of wiring ducts, wiring, ventilation, and Unit replacement when determining the space between Profinet IO Device Terminals.

**Additional Information**

The Profinet IO Device Terminal must be mounted on DIN Track.
It cannot be mounted with screws.

## Wiring Ducts

Whenever possible, route IO wiring through wiring ducts.

Install mounting bases so that it is easy to wire the IO Units through ducts. It is handy to have the ducts at the same height as the Profinet IO Device Terminal.

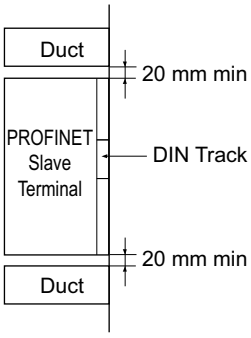


## Wiring Duct Example

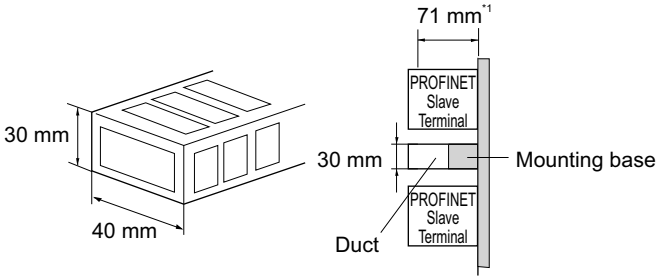


*1. The height of the DIN Track is not considered in this figure.

## Routing Wiring Ducts

Install the wiring ducts at least 20 mm away from the tops of the devices and any other objects (e.g., top of the panel, other wiring ducts, structural supports, and components) to provide enough space for air circulation and replacement of Units.

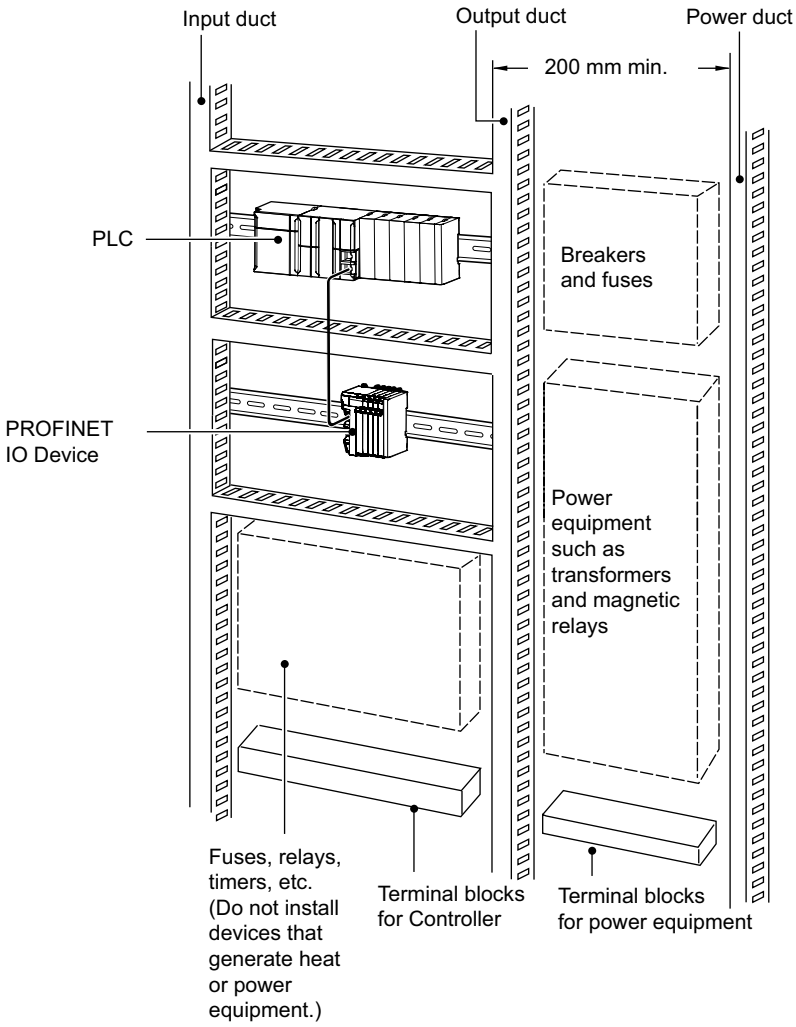

## 6-1-2 Preparations for Installation

You must install the PROFINET Coupler Unit and NX Units on a DIN Track.

The following products are recommended.

| Name | Model | Manufacturer | Remarks |
|---|---|---|---|
| 35-mm DIN Track | PFP-50N | OMRON Corporation | • Length: 50 cm<br>• Material: Aluminum<br>• Surface treatment: Insulated |
| | PFP-100N | OMRON Corporation | • Length: 100 cm<br>• Material: Aluminum<br>• Surface treatment: Insulated |
| | NS 35/7,5 PERF | Phoenix Contact | • Length: 75.5, 95.5, 115.5, or 200 cm<br>• Material: Steel<br>• Surface treatment: Conductive |
| | NS 35/15 PERF | Phoenix Contact | • Length: 75.5, 95.5, 115.5, or 200 cm<br>• Material: Steel<br>• Surface treatment: Conductive |
| End Plate | PFP-M | OMRON Corporation | Two End Plates are required for each Profinet IO Device Terminal. |
| | CLIPFIX 35 | Phoenix Contact | Two End Plates are required for each Profinet IO Device Terminal. |

Not all of the combinations of the DIN Tracks and End Plates listed above are possible.

Confirm applicability of the combinations in the following table.

| DIN Track model | PFP-M (OMRON) | CLIPFIX 35 (Phoenix Contact) |
|---|---|---|
| PFP-50N | Possible. | Possible. |
| PFP-100N | Possible. | Possible. |
| NS 35/7,5 PERF | Possible. | Possible. |
| NS 35/15 PERF | Not possible. | Possible. |

Also, use screws and washers of the following sizes to fix the DIN Tracks.

(a): Dimensions from the screw head to the fastening surface

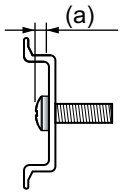


| DIN Track model | Applicable screw size | (a)*1 |
|---|---|---|
| PFP-50N | M4 | 4.9 mm max.<br>(4.1 mm max.) |
| NS35/7,5PERF | M6 | 5.4 mm max.<br>(4.6 mm max.) |
| NS35/15PERF | M6 | 10 mm max. |

*1. Dimensions in parentheses are for Communications Coupler Units with lot numbers through December 2014 or for NX Units with 12-mm widths with lot numbers through December 2014.

If you use any DIN Track other than those listed in the table above, refer to the dimensions shown in *6-1-10 Assembled Appearance and Dimensions* on page 6-20 and use proper screws and washers.

## ● DIN Tracks

PFP-100N/50N DIN Track

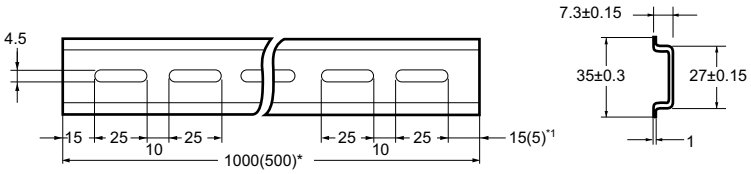


*1 PFP-50N dimensions are given in parentheses.

NS 35/7,5 PERF

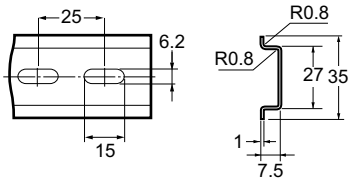


NS 35/15 PERF

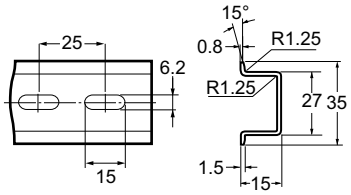


## ● End Plate

PFP-M (Two)

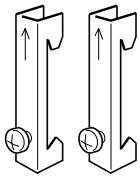

CLIPFIX 35 (Two)

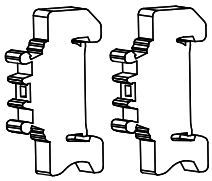

## 6-1-3 Installation Orientation

a Profinet IO Device Terminal can be installed in any of the following six orientations.

(A) is the upright installation direction and (B) to (F) are installation directions other than upright.

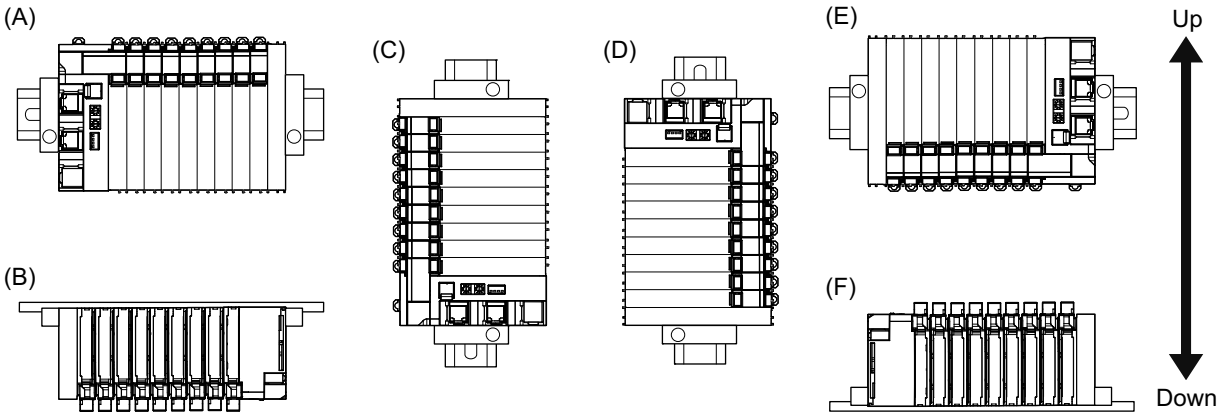


However, there are restrictions on the installation orientation of the PROFINET Coupler Unit due to the ambient operating temperature and the NX Unit power supply capacity.

There are also installation orientation restrictions on the DIN Track of the PROFINET Coupler Unit and restrictions to specifications that can result from the NX Units that are used.

For restrictions on the PROFINET Coupler Unit, refer to *3-1-3 PROFINET Coupler Unit Specifications* on page 3-4.

Refer to the user's manual for the NX Units that you will use for specific NX Unit restrictions.

**Precautions for Safe Use**

For installation orientations (C) and (D) in the above figure, support the cables, e.g., with a duct, so that the End Plate on the bottom is not subjected to the weight of the cables. The weight of the cables may cause the bottom End Plate to slide downward so that the IO Device Terminal is no longer secured to the DIN Track, which may result in malfunctions.

## 6-1-4 Installing the PROFINET Coupler Unit

This section describes how to install the PROFINET Coupler Unit.

### Precautions for Safe Use

- Always turn OFF the power supply before installing the Unit.
  If the power supply is not OFF, the Unit may malfunction or may be damaged.
- Do not apply labels or tape to the Unit. When the Unit is installed or removed, adhesive or scraps may adhere to the pins in the NX bus connector, which may result in malfunctions.
- Do not touch the pins in the NX bus connector on the Unit. Dirt may adhere to the pins in the NX bus connector, which may result in malfunctions.

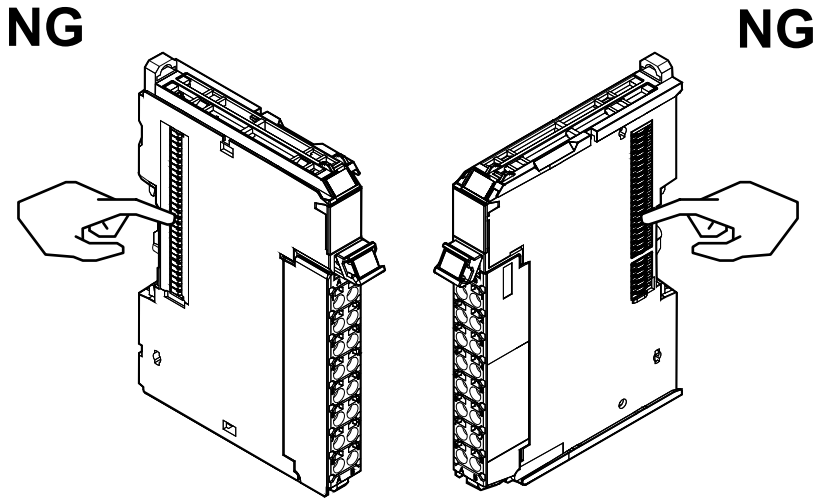


Example: NX Unit (12 mm width)

- Do not write on the PROFINET Coupler Unit with ink within the restricted region that is shown in the following figure. Also do not get this area dirty. When the Unit is installed or removed, ink or dirt may adhere to the pins in the NX bus connector, which may result in malfunctions in the Profinet IO Device Terminal.

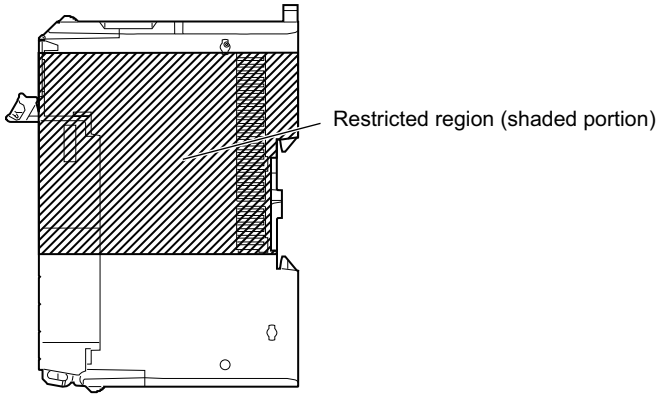


### Precautions for Correct Use

- When you handle the Unit, be careful not to touch or bump the pins in the NX bus connector.
- When you handle the Unit, be careful not to apply stress to the pins in the NX bus connector.
  If the Unit is installed and the power supply is turned ON when the pins in the NX bus connector are deformed, contact failure may cause malfunctions.

**1** Install the DIN Track.

- Using a PFP-50N/100N DIN Track

Use one M4 screw for each three holes in the DIN Track. Ensure the head of each screw is at least 2 mm below the top of the DIN Track to prevent damage to units. There must be a screw for each interval of 105 mm or less. The screw tightening torque is 1.2 N·m.

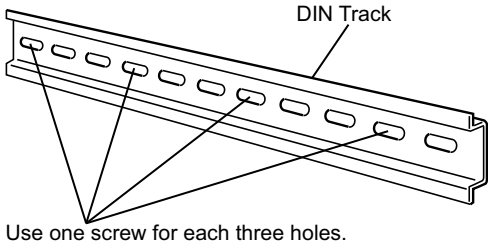


- Using an NS 35/7,5 PERF or NS 35/15 PERF DIN Track

Use one M6 screw for each four holes in the DIN Track. There must be a screw for each interval of 100 mm or less. The screw tightening torque is 5.2 N·m.

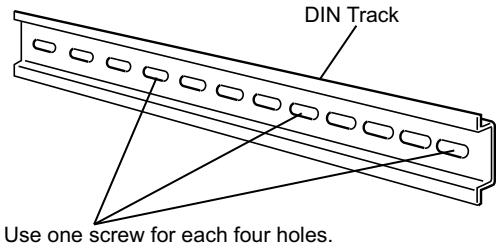


**2** Make sure that the two DIN Track mounting hooks on the PROFINET Coupler Unit are in the locked position.

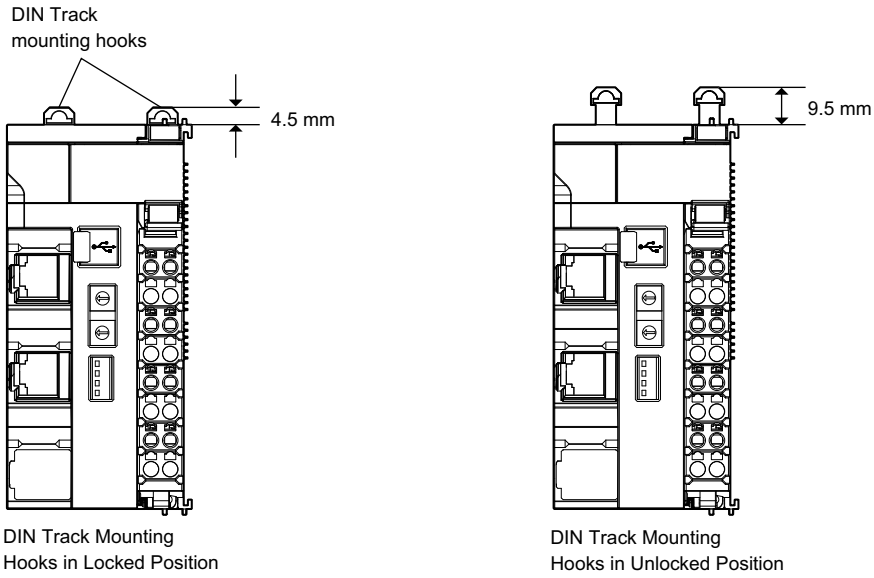


If the DIN Track mounting hooks are pressed down, they are in the locked position.

If the DIN Track mounting hooks are up, they are in the unlocked position.

If the DIN Track mounting hooks are unlocked, press them down into the locked position.

**3** Press the PROFINET Coupler Unit firmly against the DIN Track until you hear the DIN Track mounting hook lock into place.

After you mount the PROFINET Coupler Unit, check to be sure that it is securely mounted on the DIN Track.

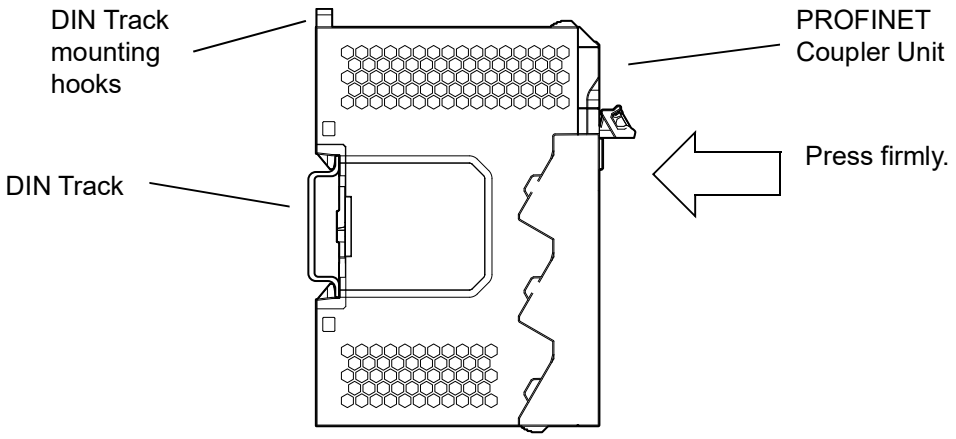


**Additional Information**

It is not normally necessary to unlock the DIN Track mounting hooks when you mount the PROFINET Coupler Unit. However, if you mount the PROFINET Coupler Unit on a DIN Track that is not one of the recommended DIN Tracks, the DIN Track mounting hooks may not lock properly. If that happens, unlock the DIN Track mounting hooks at the start of the procedure, mount the Unit to the DIN Track, and then lock the DIN Track mounting hooks.

## 6-1-5 Installing and Connecting NX Units

This section describes how to mount NX Units to the PROFINET Coupler Unit and how to connect NX Units to each other.

**Precautions for Safe Use**

- Always turn OFF the power supply before mounting the NX Units. If the power supply is not OFF, the Unit may malfunction or may be damaged.
- Do not apply labels or tape to the Units. When the Units are installed or removed, adhesive or scraps may adhere to the pins in the NX bus connector, which may result in malfunctions.
- Do not write on an NX Unit with ink within the restricted region that is shown in the following figure. Also do not get this area dirty. When the Unit is installed or removed, ink or dirt may adhere to the pins in the NX bus connector, which may result in malfunctions in the Profinet IO Device Terminal.

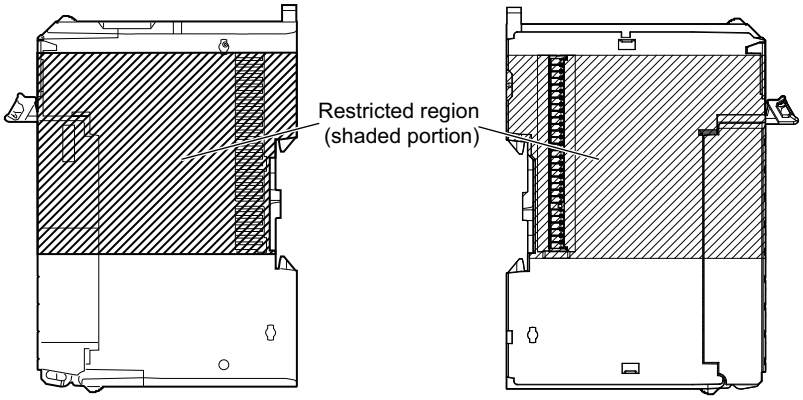


**Precautions for Correct Use**

- When you mount an NX Unit to the PROFINET Coupler Unit or when you connect NX Units to each other, always mount the Units one at a time on the DIN Track. If you connect NX Units to each other and attempt to mount them together to the DIN Track at the same time, the Units may separate from each other and fall.
- When you handle a Unit, be careful not to apply stress to the pins in the NX bus connector. If the Unit is installed and the power supply is turned ON when the pins in the NX bus connector are deformed, contact failure may cause malfunctions.
- When you handle a Unit, be careful not to touch or bump the pins in the NX bus connector.

### ● Mounting an NX Unit to the PROFINET Coupler Unit

**1** From the front of the PROFINET Coupler Unit, engage the Unit hookup guides on the NX Unit with the Unit hookup guides on the PROFINET Coupler Unit.

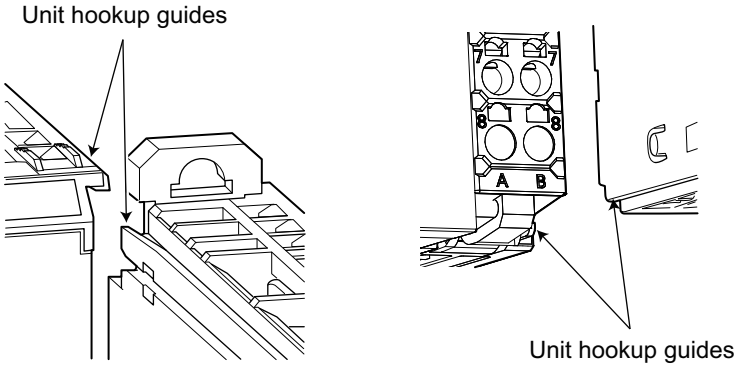


**2** Slide the NX Unit in on the hookup guides.

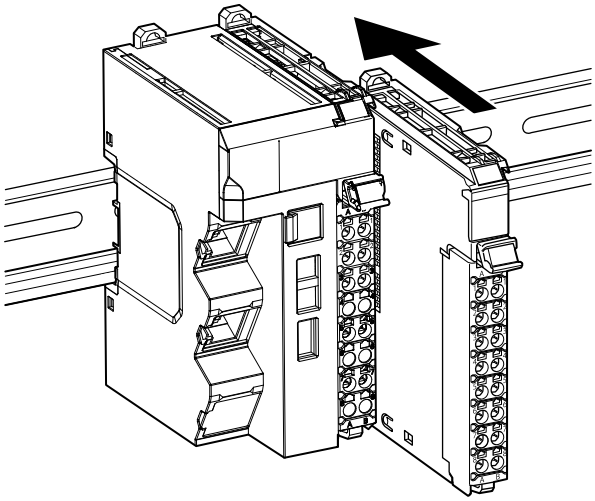

**3** Press the NX Unit with a certain amount of force against the DIN Track until you hear the DIN Track mounting hook lock into place.

When you mount the NX Unit, it is not necessary to release the DIN track mounting hook on the NX Unit.

After you mount the NX Unit, make sure that it is locked to the DIN Track.

**Additional Information**

It is not normally necessary to unlock the DIN Track mounting hook when you mount the NX Unit. However, if you mount the NX Unit on a DIN Track that is not one of the recommended DIN Tracks, the DIN Track mounting hook may not lock properly. If that happens, unlock the DIN Track mounting hook at the start of the procedure, mount the NX Unit to the DIN Track, and then lock the DIN Track mounting hook.

## ● Mounting NX Units to Each Other

Use the following procedure to mount NX Units to each other.

**1** From the front of the previously mounted NX Unit, engage the Unit hookup guides on a new Unit with the Unit hookup guides on the previously mounted NX Unit.

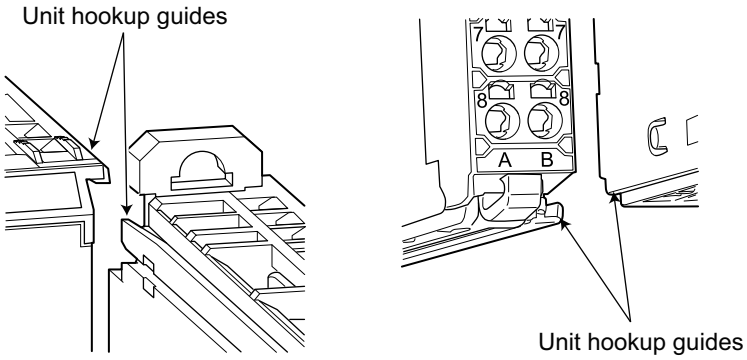


**2** Slide the NX Unit in on the hookup guides.

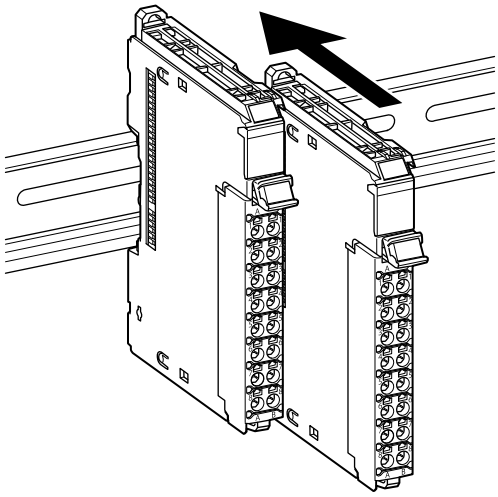

**3** Press the NX Unit with a certain amount of force against the DIN Track until you hear the DIN Track mounting hook lock into place.

When you mount the NX Unit, it is not necessary to release the DIN track mounting hook on the NX Unit.

After you mount the NX Unit, make sure that it is locked to the DIN Track.

**Additional Information**

It is not normally necessary to unlock the DIN Track mounting hook when you mount the NX Unit. However, if you mount the NX Unit on a DIN Track that is not one of the recommended DIN Tracks, the DIN Track mounting hook may not lock properly. If that happens, unlock the DIN Track mounting hook at the start of the procedure, mount the NX Unit to the DIN Track, and then lock the DIN Track mounting hook.

## 6-1-6 Mounting the End Cover

Always mount an End Cover to the end of the IO Device Terminal.

**Precautions for Safe Use**

- Always turn OFF the power supply before mounting the End Cover. If the power supply is not OFF, the Unit may malfunction or may be damaged.
- Do not apply labels or tape to the Units. When the Units are installed or removed, adhesive or scraps may adhere to the pins in the NX bus connector, which may result in malfunctions.

**Precautions for Correct Use**

Always mount an End Cover to the end of the Profinet IO Device Terminal to protect the last NX Unit in the Profinet IO Device Terminal. Not mounting the End Cover may result in malfunction or failure of the Profinet IO Device Terminal.

**1** From the front of the Profinet IO Device Terminal, slide the End Cover in on the Unit hookup guides on the NX Unit on the right end of the Profinet IO Device Terminal.

**2** Press the End Cover firmly against the DIN Track until you hear it lock into place on the DIN Track.

After you mount the End Cover, check to be sure that it is securely mounted on the DIN Track.

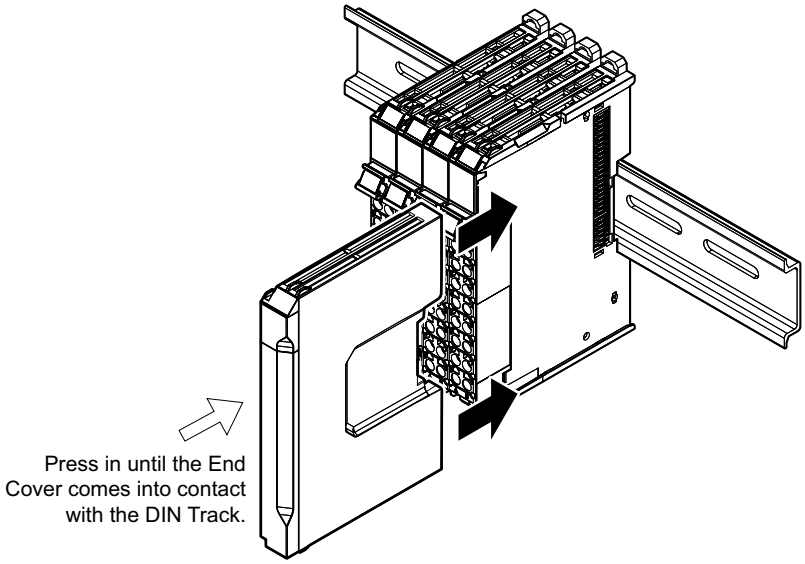

## 6-1-7 Mounting the End Plates

After you mount the End Cover, always secure the Profinet IO Device Terminal with End Plates.

**Precautions for Correct Use**

After you mount the Profinet IO Device Terminal, always install an End Plate on each side of the IO Device Terminal to secure the IO Device Terminal. If you do not secure it, the Profinet IO Device Terminal may be damaged or malfunction.

### ● Using PFP-M (OMRON)

To mount an End Plate, 1) hook the bottom of it on the bottom of the DIN Track and 2) rotate the End Plate to hook the top of it on the top of the DIN Track.
Then tighten the screw to lock the End Plate in place.

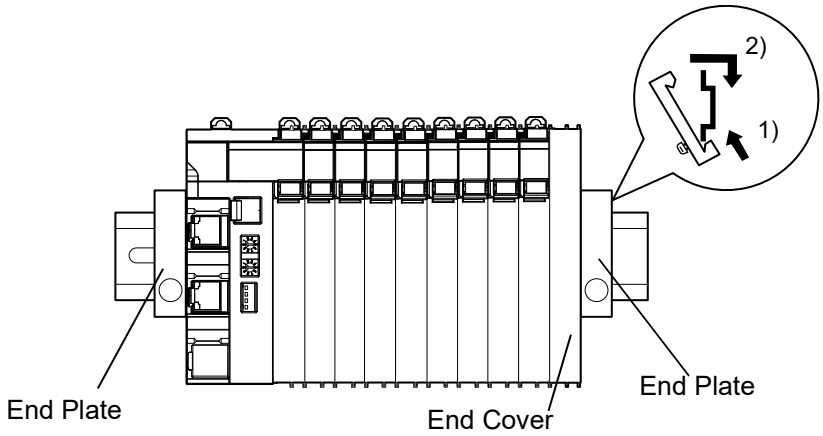


### ● Using CLIPFIX 35 (Phoenix Contact)

To mount an End Plate, 1) hook the top of it on the top of the DIN Track and 2) rotate the End Plate to hook the bottom of it on the bottom of the DIN Track. Press in until you hear the End Plate lock into place.

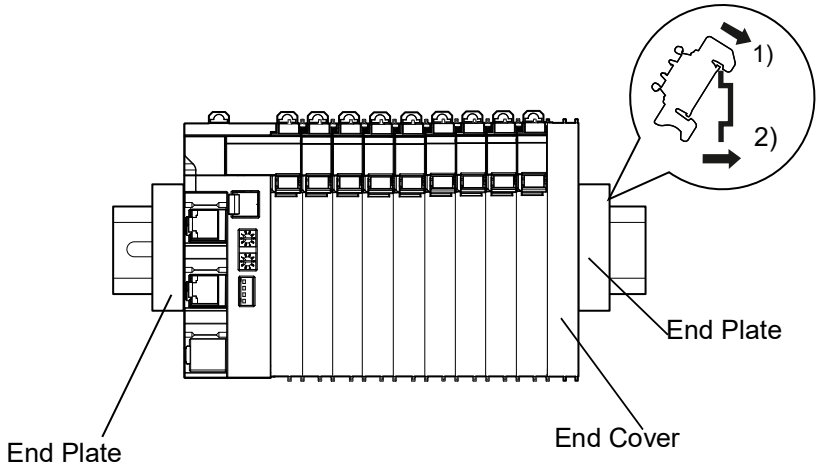


To remove an End Plate 1) insert the tip of a flat-blade screwdriver into groove “a” and 2) use “b” as a fulcrum and lift the end of the screwdriver, as shown in the following diagram.

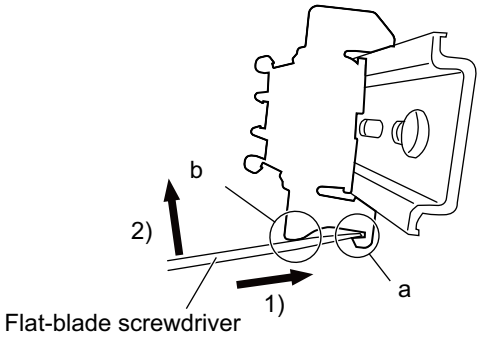


## 6-1-8 Attaching Markers

Markers can be attached to PROFINET Coupler Units, NX Units, and terminal blocks on NX Units to identify them.

The plastic markers made by OMRON are installed for the factory setting. The ID information can be written on them.

Commercially available markers can also be installed.

Replace the markers made by OMRON if you use commercially available markers now.

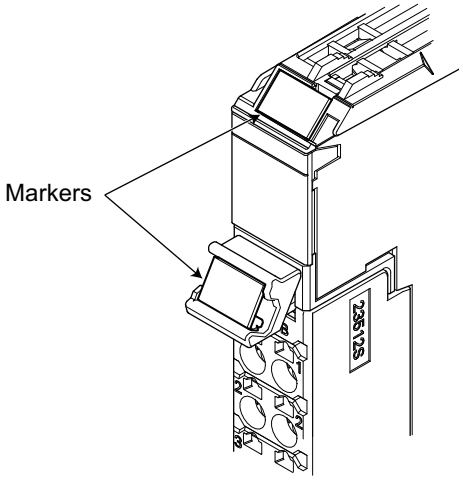


### ● Installation Method

Insert the protrusions on the markers into the marker attachment locations on the PROFINET Coupler Units, NX Units, and terminal blocks on NX Units.

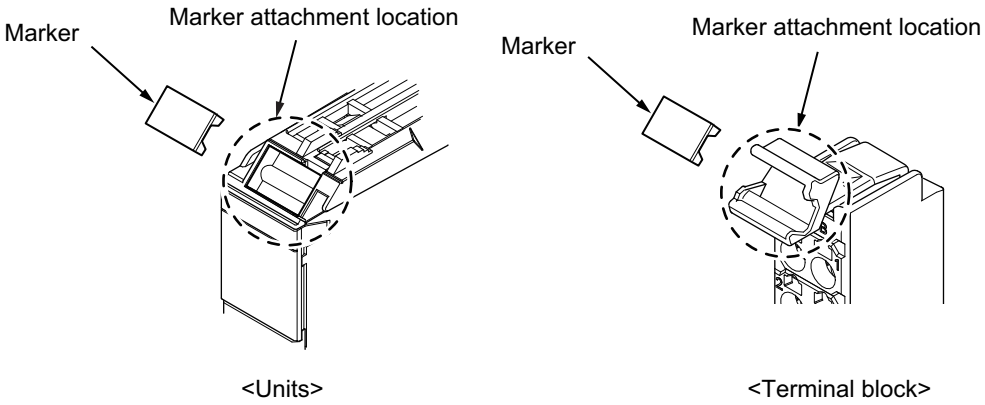

### Commercially Available Markers

Commercially available markers are made of plastic and can be printed on with a special printer.

To use commercially available markers, purchase the following products.

| Product name | Model number | |
|---|---|---|
| | Manufactured by Phoenix Contact | Manufactured by Weidmuller |
| Markers | UC1-TMF8 | DEK 5/8 |
| Special marker printer | UM EN BLUEMARK X1 | PrintJet PRO |

The markers made by OMRON cannot be printed on with commercially available special printers.

## 6-1-9 Removing Units

**Precautions for Safe Use**

Always turn OFF the power supply before removing any Unit.
If the power supply is not OFF, the Unit may malfunction or may be damaged.

**Precautions for Correct Use**

- When removing an NX Unit, remove multiple Units together which include the one you want to remove. If you attempt to remove only one Unit, it is stuck and hard to pull out. Do not unlock the DIN track mounting hooks on all of the NX Units at the same time. If you unlock the DIN Track mounting hooks on all of the NX Units at the same time, all of the Units may come off.
- When you remove a Unit, be careful not to touch or bump the pins in the NX bus connector.

**1** Use a flat-blade screwdriver to pull up the DIN Track mounting hook on the Unit to remove.

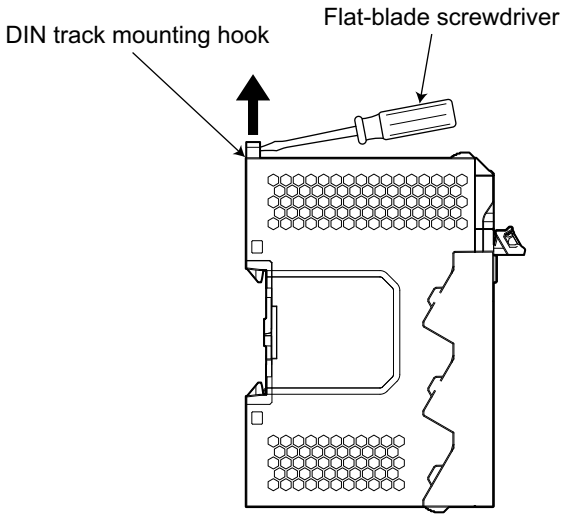

**2** Remove the Unit with either (a) or (b) below.

(a) For a PROFINET Coupler Unit, place your fingers on the protrusions on the PROFINET Coupler Unit and pull it straight forward.

(b) For an NX Unit, place your fingers on the protrusions on more than one NX Unit, including the NX Unit to remove, and pull the NX Units straight forward.

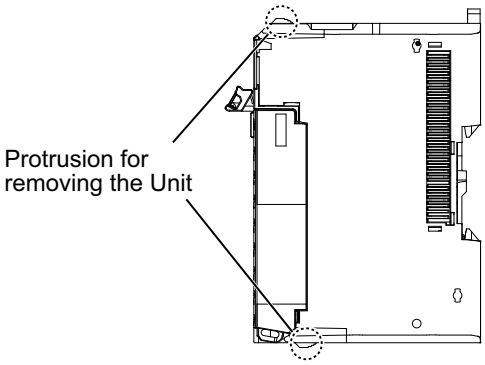


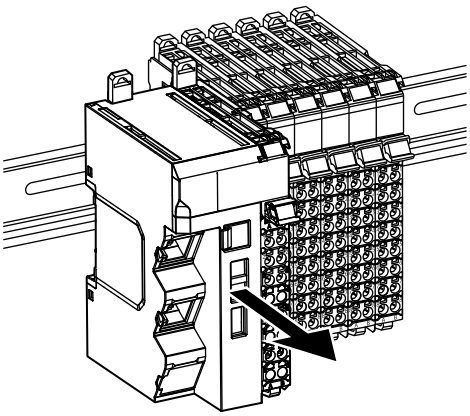

PROFINET Coupler Unit

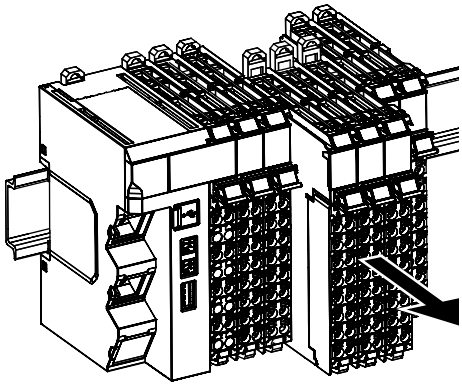

NX Unit

## 6-1-10 Assembled Appearance and Dimensions

### Installation Dimensions

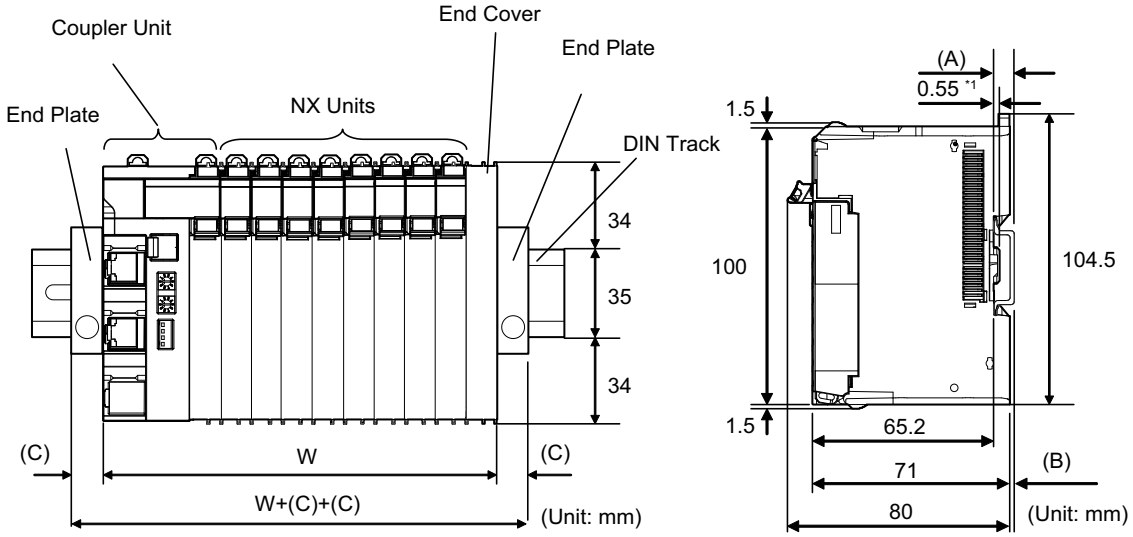


*1. The dimension is 1.35 mm for NX Units with 12-mm widths with lot numbers through December 2014.

W: Width of the Profinet IO Device Terminal

W + (C) + (C): Width of the Profinet IO Device Terminal including the End Plates

| DIN Track model | (A)<br>DIN Track dimension | (B)<br>Dimension from the back of the Unit to the back of the DIN Track |
|---|---|---|
| PFP-100N | 7.3 mm | 1.5 mm |
| PFP-50N | 7.3 mm | 1.5 mm |
| NS 35/7,5 PERF | 7.5 mm | 1.7 mm |
| NS 35/15 PERF | 15 mm | 9.2 mm |

| End Plate model | (C)<br>End Plate dimension |
|---|---|
| PFP-M | 10 mm |
| CLIPFIX 35 | 9.5 mm |

## Calculation Example for the Configuration Width of a Profinet IO Device Terminal

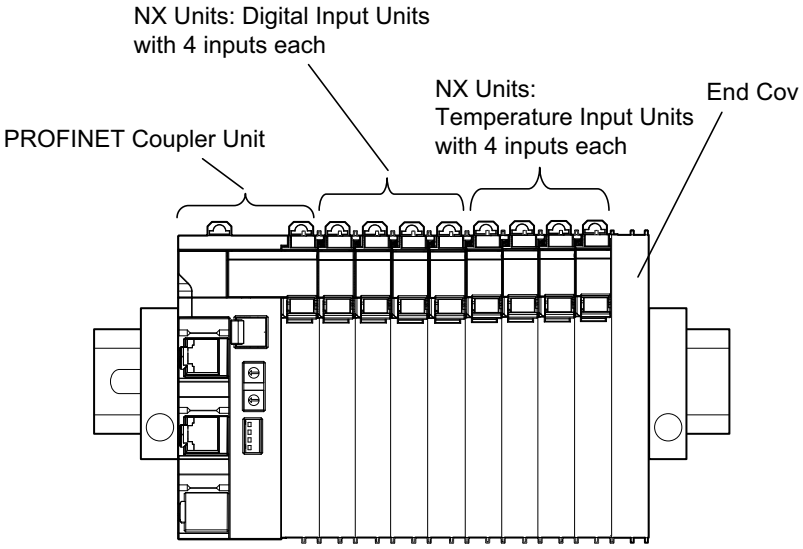


The widths of the Units in the example Profinet IO Device Terminal configuration and the total configuration width are given below.

| Name | Model | Unit width |
|---|---|---|
| PROFINET Coupler Unit | NX-PNC202 | 46 mm |
| NX Units: Digital Input Units | NX-ID3317 | 12 mm × 4 Units |
| NX Units: Temperature Input Units | NX-TS3101 | 24 mm × 2 Units |
| End Cover | NX-END01 | 12 mm |
| Total: | W = 46 + (12 × 4) + (24 × 2) + 12 = 154 mm | |

### Additional Information

You can check the width of an IO Device Terminal when you create the Unit configuration on the Edit IO Device Terminal Configuration Tab Page on the Sysmac Studio. You can display the width on the right of the IO Device Terminal on Edit IO Device Terminal Configuration Tab Page on the Sysmac Studio. Click to display the width.

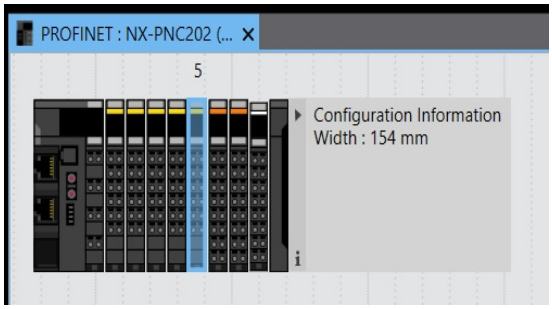

## Installation Height

The installation height of the Profinet IO Device Terminal depends on the model of DIN Track and on the models of NX Units that are mounted.

Also, additional space is required for the cables that are connected to the Unit. Allow sufficient depth in the control panel and allow extra space when you mount the Profinet IO Device Terminal.

The following figure shows the dimensions from the cables connected to the PROFINET Coupler Unit to the back of the Unit.

This is the installation height without the DIN Track of the PROFINET Coupler Unit.

Refer to *Installation Dimensions* on page 6-20 for the influence on the installation height on the DIN Track.

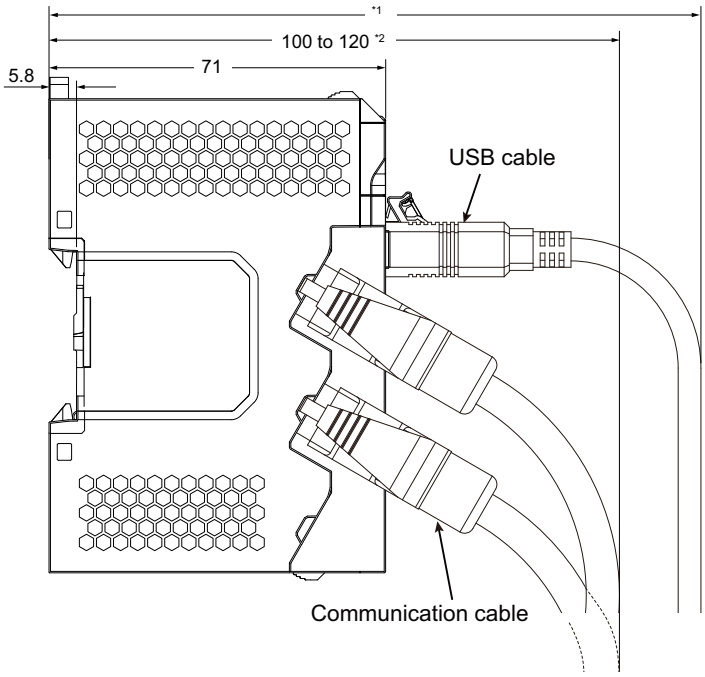


*1. This dimension depends on the specifications of the commercially available USB certified cable. Check the specifications of the USB cable that is used.

*2. Dimension from Back of Unit to Communications Cables

- 100 mm: When an MPS588-C Connector is used.
- 120 mm: When an XS6G-T421-1 Connector is used.

As shown above, the installation height depends on the USB cable specifications when a USB cable is used to connect the Sysmac Studio to the PROFINET Coupler Unit. Check the specifications of the USB cable that is used.

Refer to the manuals for the specific NX Units for the dimensions of NX Units.

# 6-2 Control Panel Installation

To ensure system reliability and safety, the system must be designed and configured according to the installation environment (temperature, humidity, vibration, shock, corrosive gases, overcurrent, noise, etc.).

## 6-2-1 Temperature

Panels have been reduced in size due to space-saving and miniaturization in devices and systems, and the temperature inside the panel may be at least 10 to 15°C higher than outside the panel. Implement the following measures against overheating at the installation site and in the panel, and allow a sufficient margin for the temperature.

### High Temperatures

Use the following cooling methods as required, taking into account the ambient temperature and the amount of heating inside the panel.

#### ● Natural Cooling

Natural cooling relies on natural ventilation through slits in the panel, rather than using cooling devices such as fans or coolers.

When using this method, observe the following points.

- Do not install the Profinet IO Device Terminal at the top of the panel, where hot air tends to stagnate.
- To provide ventilation space above and below the Profinet IO Device Terminal, leave sufficient distance from other devices, wiring ducts, etc.
- Do not install the Profinet IO Device Terminal directly above heat-generating equipment, such as heaters, transformers, and devices with high resistance.
- Do not install the Profinet IO Device Terminal in a location exposed to direct sunlight.

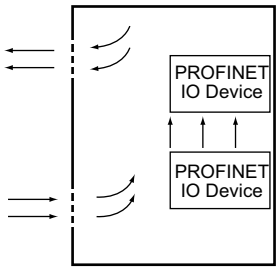


Natural Cooling

### ● Forced Ventilation by Fan at Top of Panel

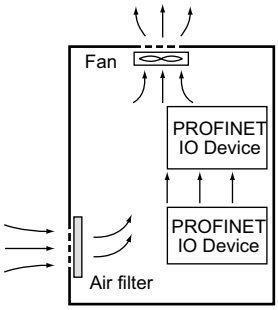


Forced Ventilation Method

### ● Forced Air Circulation by Fan in Closed Panel

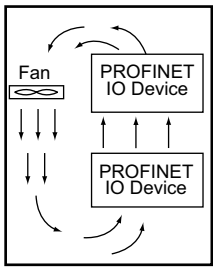


Forced Circulation Method

### ● Room Cooling (Cooling the Entire Room Where the Control Panel Is Located)

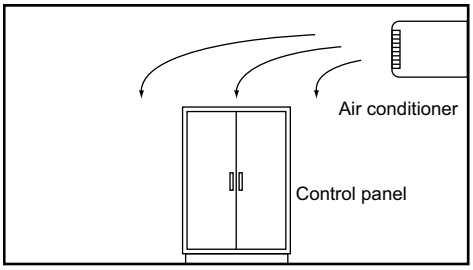


Room Cooling

## Low Temperatures

The Profinet IO Device Terminal may not start normally if the temperature is below 0°C when the power is turned ON.

Maintain an air temperature of at least approximately 5°C inside the panel, by implementing measures such as installing a low-capacity space heater in the panel.

Alternatively, leave the Profinet IO Device Terminal power ON to keep the Profinet IO Device Terminal warm.

## 6-2-2 Humidity

Rapid temperature changes can cause condensation to occur, resulting in malfunctioning due to short-circuiting.

When there is a possibility of this occurring, take measures against condensation, such as leaving the Profinet IO Device Terminal power ON at night or installing a heater in the control panel to keep it warmer.

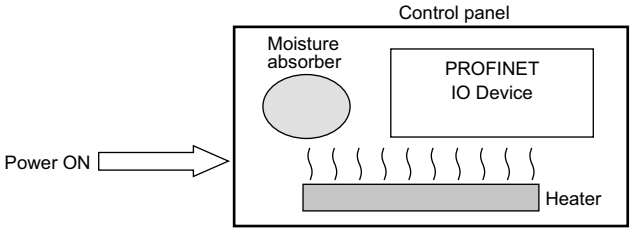


Examples of Measures against Condensation

## 6-2-3 Vibration and Shock

The Profinet IO Device Terminal is tested for conformity with the sine wave vibration test method (IEC 60068-2-6) and the shock test method (IEC 60068-2-27) of the Environmental Testing for Electrotechnical Products. It is designed so that malfunctioning will not occur within the specifications for vibration and shock. If, however, the Profinet IO Device Terminal is to be used in a location in which it will be directly subjected to regular vibration or shock, then implement the following countermeasures:

- Separate the control panel from the source of the vibration or shock. Or secure the Profinet IO Device Terminal and the panel with rubber padding to prevent vibration.
- Make the building or the floor vibration-resistant.
- To prevent shock when other devices in the panel such as electromagnetic contactors operate, secure either the source of the shock or the Profinet IO Device Terminal with rubber padding.

## 6-2-4 Atmosphere

Using the Profinet IO Device Terminal in any of the following locations can cause defective contact with connectors and corrosion of components. Implement countermeasures such as purging the air as required.

- In locations exposed to dust, dirt, salt, metal powder, soot, or organic solvents, use a panel with an airtight structure. Be careful of temperature increases inside the panel.
- In locations exposed to corrosive gas, purge the air inside the panel to clear the gas and then pressurize the inside of the panel to prevent gas from entering from outside.
- In locations where flammable gas is present, either use an explosion-protected construction or do not use the Profinet IO Device Terminal.

## 6-2-5 Electrical Environment

When installing or wiring devices, make sure that there will be no danger to people and that noise will not interfere with electrical signals.

# Installation Location of Profinet IO Device Terminals

Install the Profinet IO Device Terminal as far away as possible from high-voltage (600 V or higher) and power devices to ensure safe operation and maintenance.

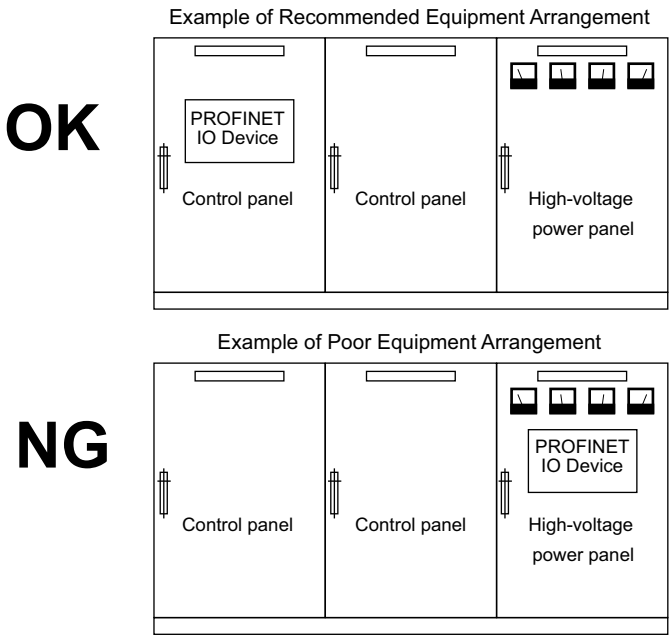


Examples of Equipment Arrangement in Panel with High-voltage Devices

## Arrangement of Profinet IO Device Terminal and Cables

Observe the following points.

- The coils and contacts in electromagnetic contactors and relays in an external circuit are sources of noise. Do not install them close to the Profinet IO Device Terminal. Locate them at least 100 mm away from the Profinet IO Device Terminal.

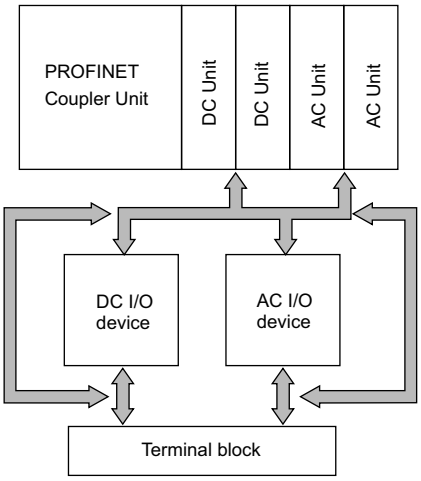


Example of Arrangement in Panel

## Wire Layout for the Power Supply System

Observe the following points when wiring the power supply system.

- Separate the Profinet IO Device Terminal power supply from the IO device power supply and install a noise filter near the power supply feed section.
- Use an isolating transformer to significantly reduce noise between the Profinet IO Device Terminal and the ground. Install the isolating transformer between a power supply and the noise filter, and do not ground the secondary coil of the transformer.

- Keep the wiring between the transformer and the Profinet IO Device Terminal as short as possible, twist the wires well, and keep the wiring separate from high-voltage and power lines.

### ● Supplying IO Power from the NX Bus

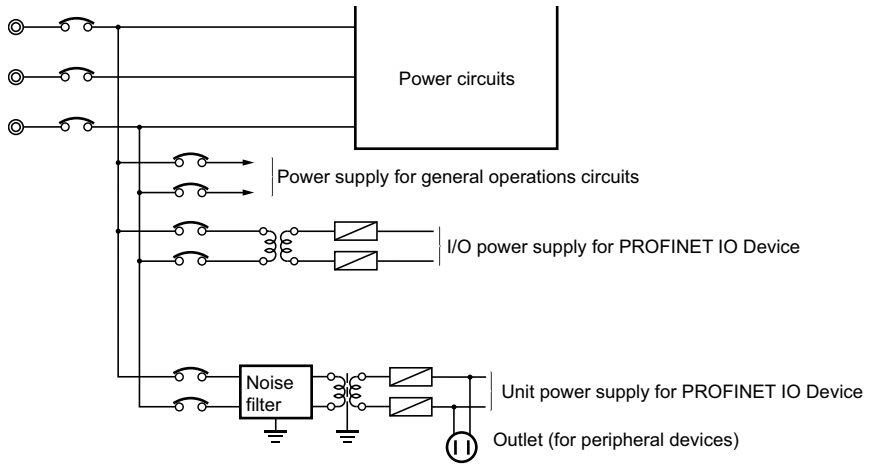


Power Supply System Diagram

### ● Supplying IO Power from External Sources

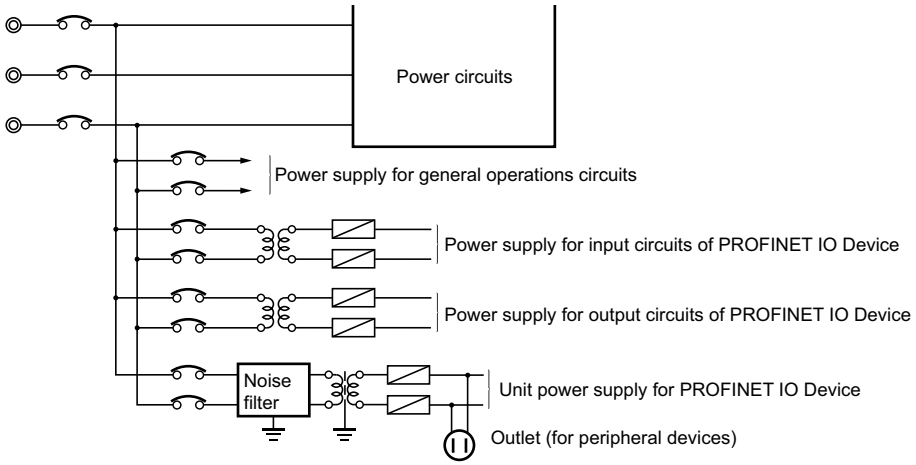


Power Supply System Diagram

## Wiring External IO Signal Lines

Observe the following points when wiring external IO signal lines.

- To absorb reverse electromotive force when an inductive load is connected to an output signal, connect a surge suppressor near the inductive load in an AC circuit, or connect a diode near the inductive load in a DC circuit.

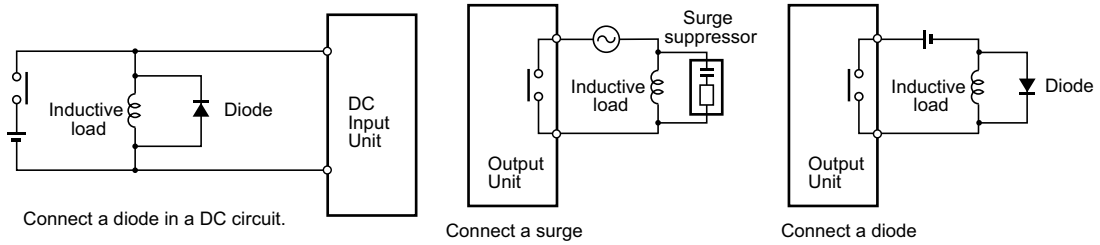


Connect a diode in a DC circuit.

Input Signal Noise Countermeasures

Connect a surge suppressor in an AC circuit.

Connect a diode in a DC circuit.

Output Signal Noise Countermeasures

- Never bundle IO cables with high-voltage or power lines, and do not route them in close proximity or parallel to such lines. If output signal lines must be routed in close proximity to such lines, place them in separate ducts or conduits. Be sure to ground the ducts or conduits.

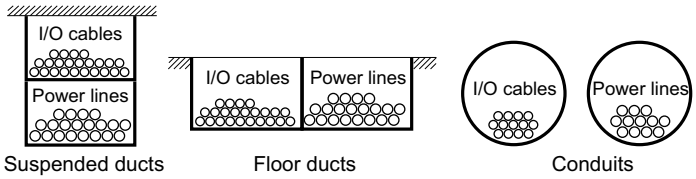


I/O Cable Arrangement

- If the signal lines and power lines cannot be routed in separate ducts, use shielded cable. Connect the shield to the ground terminal at the Profinet IO Device Terminal, and leave it unconnected at the input device.
- Wire the lines so that common impedance does not occur. Such wiring will increase the number of wires, so use common return circuits. Use thick wires with sufficient allowance for the return circuits, and bundle them with lines of the same signal level.
- For long IO lines, wire the input and output signal lines separately.
- Use twisted-pair wires for pilot lamps (and particularly lamps with filaments).
- If noise causes malfunctions, use countermeasures, such as CR surge absorbers and diodes, for noise sources of input devices and output load devices, as required.

## External Wiring

Wiring, and noise countermeasures in particular, are based on experience, and it is necessary to closely manage wiring based on experience and information in the manuals.

### ● Wiring Routes

Each of the following combinations includes different signal types, properties, or levels. They will cause the signal-to-noise ratio to drop due to factors such as electrical induction. As a general rule when wiring, either use separate cables or separate wiring routes for these items. Future maintenance operations and changes to the system will also be made easier by carefully organizing the wiring from the start.

- Power lines and signal lines
- Input signals and output signals
- Analog signals and digital signals
- High-level signals and low-level signals
- Communications lines and power lines
- DC signals and AC signals
- High-frequency devices (such as Inverters) and signal lines (communications)

### ● Wiring

Observe the following points when wiring power supply and signal cables.

- When routing signal cables with differing characteristics through the same duct, always keep them separated.
- As much as possible, avoid routing multiple power supply lines through the same duct. If it cannot be avoided, then construct a partition between them in the duct and ground the partition.

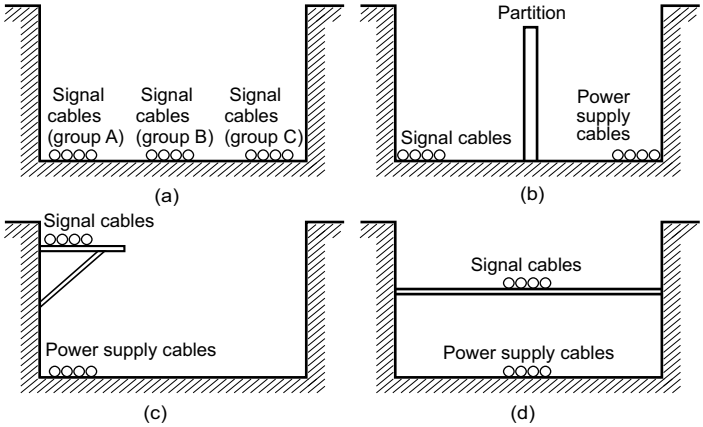


Partitioning Methods for Signal and Power Supply Cables

- To avoid overheating the conduits when using conduits for wiring, do not place wires for a single circuit in separate conduits.

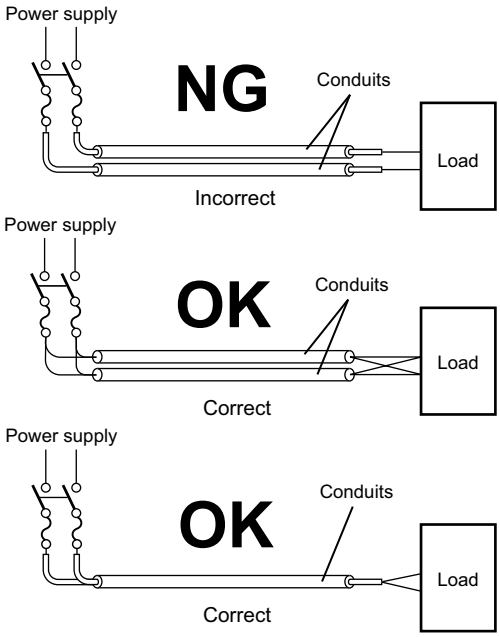


Parallel Wiring (Single Phase)

- Power cables and signal cables adversely affect each other. Do not wire them in parallel.
- Noise induction may occur if the Profinet IO Device Terminal is installed in a panel that includes high-voltage devices. Whenever possible, wire and install them separately.
- Either install the Profinet IO Device Terminal a minimum of 200 mm away from high-voltage lines or power lines, or place the high-voltage lines or power lines in metal tubing and completely ground the metal tubing to 100 Ω or less.

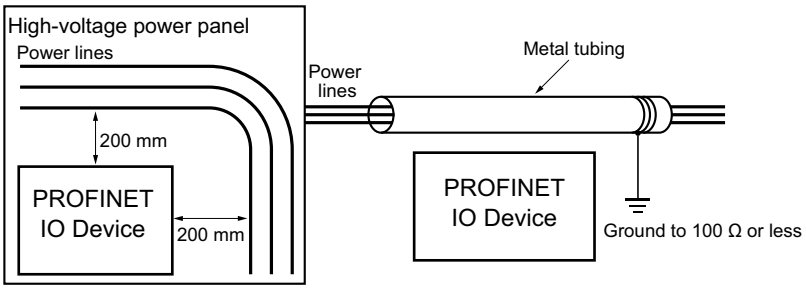


Example: Separating PROFINET IO Device from Power Lines

### ● Other Precautions

Some models of Digital Input Units and Digital Output Units have polarity. Make sure that you wire the polarity correctly.

## 6-2-6 Grounding

Grounding has the following two purposes.

- Protective Grounding
  Protective grounding is done to ensure safety. It is intended to prevent electrical shock by grounding the electrical potential that is generated by factors such as leakage, induction, or failure.
- Functional Grounding
  Functional grounding is done to protect device and system functions, including prevention of noise from external sources, or prevention of noise from devices or equipment that could have harmful effects on other devices or equipment.

Grounding requirements sometimes depend on the situation, and they may be found based on experimentation. It is important to sufficiently check the particular circumstances before grounding.

### Wire Layout for the Power Supply System

#### ● Principles of One-point Grounding

For devices to operate properly, the reference potential between the devices must be stabilized. Use one-point grounding so that noise current does not flow to ground lines between the devices.

Whenever possible, use an independent ground (with the ground pole separated by a minimum of 10 m from any other ground pole).

- Ground to 100 Ω or less, and if possible use a separate ground from those of other devices. (See following figure (a).)
- If using an independent ground is not possible, then use a common ground as shown in figure (b). Connect to the ground pole of the other device.
- Never connect to the same ground as a device that draws a large amount of power, such as a motor or inverter. Ground the devices separately to avoid mutually adverse influences.
- To prevent electrical shock, do not connect to ground poles to which multiple devices are connected.
- Use a ground pole as close to the Profinet IO Device Terminal as possible and keep the ground line as short as possible.

## Grounding Methods

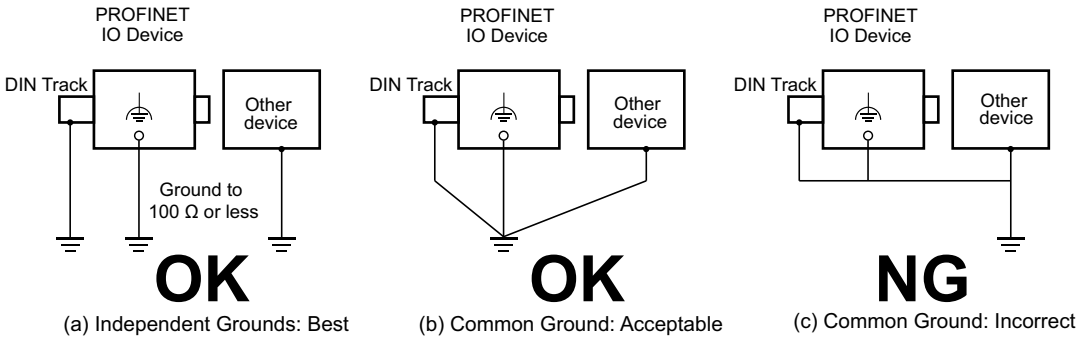


(a) Independent Grounds: Best (b) Common Ground: Acceptable (c) Common Ground: Incorrect

If the DIN Track is made of steel and the surface is not treated to produce an insulating material, you can omit grounding the functional ground terminal on any Unit that has one, as shown in the following figures.

- DIN Track Made of Steel and Surface Not Insulated

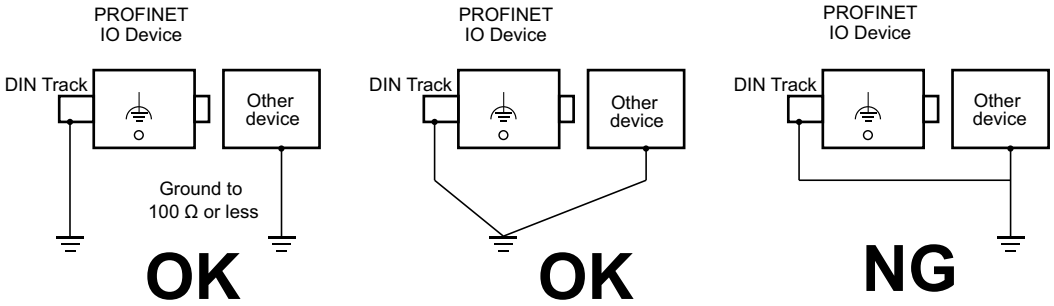


(a) Independent Grounds: Best (b) Common Ground: Acceptable (c) Common Ground: Incorrect

## Precautions when Grounding

- To prevent influence from leakage current from other electrical devices, electrically isolate the panel in which the Profinet IO Device Terminal is housed from other devices.
- If high-frequency equipment is present, then ground not only the high-frequency equipment but also the panel itself in which the Profinet IO Device Terminal is housed.
- To ground the shield wire when using shielded cables for IO wiring, wire the ground according the shield treatment specifications for the NX Unit that is used.
  Wire communications cables according to the shield treatment specifications for the Unit.

# 7

# Wiring

This section describes how to wire the Profinet IO Device Terminal.


**7-1 PROFINET Network Wiring . . . . . 7-2**

7-1-1 Installation Precautions . . . . . 7-2

7-1-2 Preparations for Installation . . . . . 7-2

7-1-3 Pin Arrangement of Communications Connectors on the PROFINET Coupler Unit . . . . . 7-3

7-1-4 Connecting Communications Cables and Connectors . . . . . 7-4

7-1-5 Connecting Communications Cables . . . . . 7-4

**7-2 Connecting the Power Supply and Ground Wires . . . . . 7-6**

7-2-1 Wiring the PROFINET Coupler Unit . . . . . 7-6

7-2-2 Wiring the Power Supply to the PROFINET IO Device Terminal . . . . . 7-7

7-2-3 Grounding the PROFINET IO Device Terminal . . . . . 7-7

7-2-4 Precautions for Wiring the PROFINET IO Device Terminal Together with Computers and other Peripheral Devices . . . . . 7-11

7-2-5 Wiring to the Screwless Clamping Terminal Block . . . . . 7-11

**7-3 Connecting USB Cable . . . . . 7-26**

**7-4 Wiring External Signal Lines . . . . . 7-28**

# 7-1 PROFINET Network Wiring

This section describes how to install the PROFINET network.

## 7-1-1 Installation Precautions

Basic precautions for the installation of PROFINET networks are provided below.

### Precautions when Installing a Network

- When you install a Profinet network, take sufficient safety precautions and perform the installation according to all applicable standards and specifications. An expert well versed in safety measures and the standards and specifications should be asked to perform the installation.
- Do not install PROFINET network equipment near sources of noise.
  If the network must be installed in an area with noise, take steps to address the noise, such as placing equipment in metal cases.

### Precautions when Installing Communications Cables

- Check the following items on the communications cables that are used in the network.

  Are there any breaks?

  Are there any shorts?

  Are there any connector problems?
- When you connect the cable to the communications connectors on devices, firmly insert the communications cable connector until it locks in place.
- Do not lay the communications cables together with high-voltage lines.
- Do not lay the communications cable near devices that generate noise.
- Do not lay the communications cables in locations subject to high temperatures or high humidity.
- Do not lay the communications cables in locations subject to excessive dust, oil mist, or other contaminants.
- There are limitations on the bending radius of communications cables. Check the specifications of the communications cable for the bending radius.

## 7-1-2 Preparations for Installation

Prepare the following devices.

| Product | Remarks |
|---|---|
| Twisted-pair cable | The twisted-pair cable connects PROFINET Units or built-in PROFINET ports to the Ethernet switch, with an RJ45 Modular Connector at each end.<br>Use an STP (shielded twisted-pair) cable of category 5 or higher. |

**Precautions for Safe Use**

- Double-check all switches and other settings and double-check all wiring to make sure that they are correct before turning ON the power supply. Use the correct wiring parts and tools when you wire the system.
- Do not exceed the ranges that are given in the specifications for the communications distance and number of connected Units.

**Precautions for Correct Use**

- The maximum length between nodes is 100 m. However, some cables are specified for less than 100 m. Generally speaking, if the conductors are twisted wire rather than solid wire, transmission performance will be lower, and reliable communications may not be possible at 100 m. Confirm details with the cable manufacturer.

## 7-1-3 Pin Arrangement of Communications Connectors on the PROFINET Coupler Unit

The pin arrangement of the Ethernet communications connectors is given below.

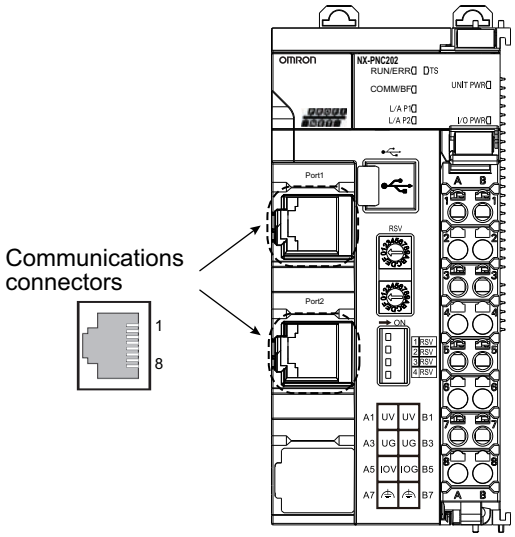


| Pin No. | Signal name | Abbreviation |
|---|---|---|
| 1 | Send data + | TD+ |
| 2 | Send data – | TD– |
| 3 | Receive data + | RD+ |
| 4 | Not used – | --- |
| 5 | Not used – | --- |
| 6 | Receive data – | RD– |
| 7 | Not used – | --- |
| 8 | Not used – | --- |

## 7-1-4 Connecting Communications Cables and Connectors

Use straight connections for the communications cables and connectors, as shown below.

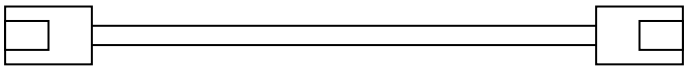

| Pin No. | Wire color | Wire color | Pin No. |
|---|---|---|---|
| 1 | White-Green | White-Green | 1 |
| 2 | Green | Green | 2 |
| 3 | White-Orange | White-Orange | 3 |
| 4 | Blue | Blue | 4 |
| 5 | White-Blue | White-Blue | 5 |
| 6 | Orange | Orange | 6 |
| 7 | White-Brown | White-Brown | 7 |
| 8 | Brown | Brown | 8 |
| Hood | Shield*1 | Shield*1 | Hood |

*1. Connect the cable shield wire to the connector hood at both ends of the cable.

**Precautions for Correct Use**

Do not exceed the ranges that are given in the specifications for the communications distance and number of connected Units.

**Additional Information**

There are two connection methods for Ethernet cables: T568A and T568B.

The T568A connection method is shown in the above figure, but the T568B connection method can also be used.

## 7-1-5 Connecting Communications Cables

Cable connections can be made freely in PROFINET networks.

The following example shows line topology.

Connect the communications cable from the PROFINET IO Controller to one of the ports on the first Profinet IO Device Terminal, and then connect another communications cable from the second port on the first Profinet IO Device Terminal to one of the port on the next Profinet IO Device Terminal.

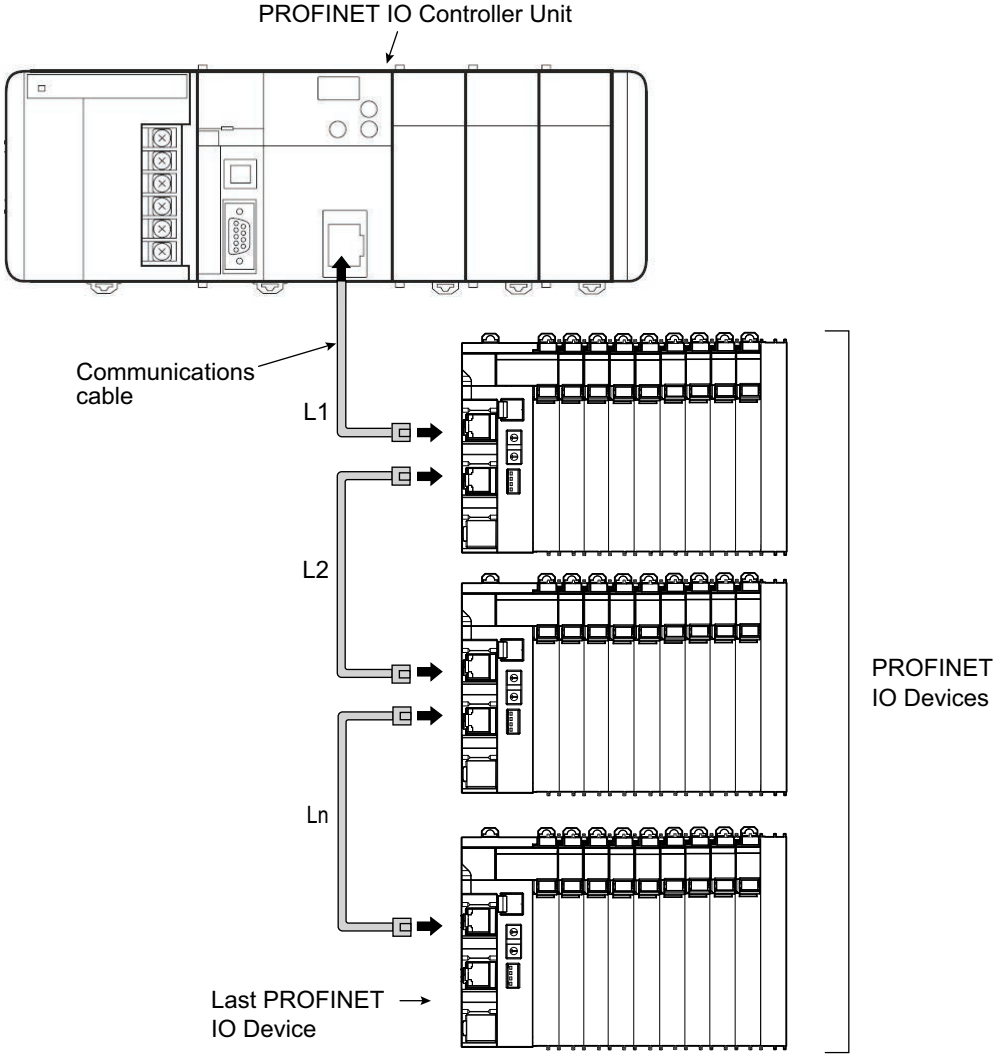


### Precautions for Correct Use

- The cable between any two nodes (L1, L2 ... Ln) must be 100 m or less.
- Do not exceed the ranges that are given in the specifications for the communications distance and number of connected Units.
- Firmly connect the communications cable connector until it clicks into place.
- When you install the communications cables, observe the cable specifications (e.g., bending radius) of the cable manufacturer.
- Do not disconnect the communications cables from the Profinet IO Devices during operation. The outputs from the PROFINET IO Controller may become unstable. However, for the PROFINET IO Controller, it is OK to disconnect the communications cable from a Profinet IO Device Terminal that has been disconnected from communications in the software.

# 7-2 Connecting the Power Supply and Ground Wires

This section describes how to wire the power supplies and ground the Profinet IO Device Terminal.

## 7-2-1 Wiring the PROFINET Coupler Unit

The wiring of the power supply and ground to the PROFINET Coupler Unit is shown in the following figure.

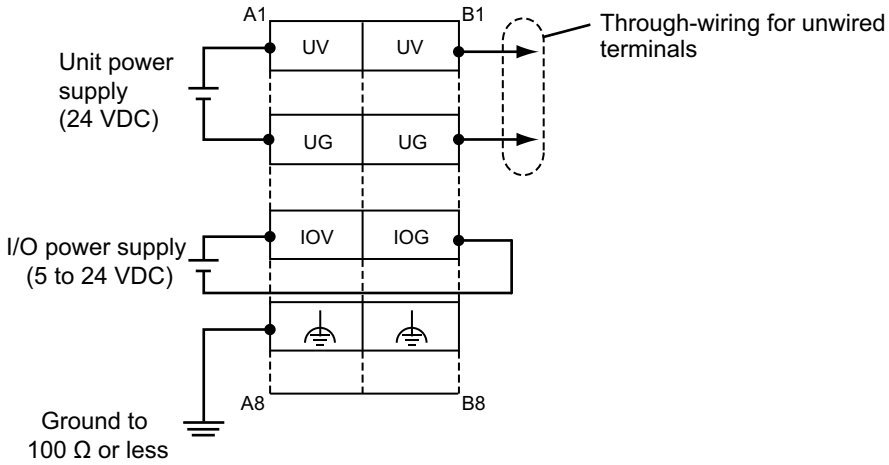


### Unit Power Supply Terminals

These terminals are connected to the Unit power supply. The details are given in the following table.

| Terminal number indication | Terminal name | Description |
|---|---|---|
| A1 or B1 | UV | Connect the 24-VDC wire (positive side) from the Unit power supply to either the A1 or B1 terminal. |
| A3 or B3 | UG | Connect the 0-VDC wire (negative side) from the Unit power supply to either the A3 or B3 terminal. |

You can use the unwired terminals for through-wiring to an Additional NX Unit Power Supply Unit or to the Unit power supply terminals on another PROFINET Coupler Unit. Make the current supplied from the unwired terminals meet the following conditions.

Current supplied from unwired terminals ≤ Current capacity of power supply terminals − Current consumption of the PROFINET Coupler Unit block
Refer to *5-4-1 Selecting the Unit Power Supply* on page 5-16 for details on blocks.

### IO Power Supply Terminals

These terminals are connected to the IO power supply. The details are given in the following table.

| Terminal number indication | Terminal name | Description |
|---|---|---|
| A5 | IOV | Connect the 5 to 24-VDC wire (positive side) from the IO power supply. |
| B5 | IOG | Connect the 0-VDC wire (negative side) from the IO power supply. |

Provide a power supply voltage that is within the power supply voltage specifications of the NX Unit IO circuits and connected external devices.

### Functional Ground Terminals

These are the functional ground terminals. Connect the ground wire to one of these terminals. The details are given in the following table.

| Terminal number indication | Terminal symbol | Description |
|---|---|---|
| A7 or B7 | | Connect the ground wire to either the A7 or B7 terminal. |

**Precautions for Correct Use**

Do not connect the through-wiring terminals on the Unit power supply terminals to the IO power supply terminals. Always use separate power supplies for the Unit power supply and the IO power supply. Otherwise, noise may cause malfunctions.

Refer to *7-2-5 Wiring to the Screwless Clamping Terminal Block* on page 7-11 for the procedure to connect wires to the terminals on the screwless clamping terminal block.

## 7-2-2 Wiring the Power Supply to the PROFINET IO Device Terminal

Refer to *Section 5 Designing the Power Supply System* for information on wiring the power supplies to the Profinet IO Device Terminal.

## 7-2-3 Grounding the PROFINET IO Device Terminal

This section describes how to ground the Profinet IO Device Terminal.

### Units with Ground Terminals and Type of Ground Terminals

Some of the Units in a Profinet IO Device Terminal have ground terminals.

#### Units with Ground Terminals

- PROFINET Coupler Units
- Additional NX Unit Power Supply Unit
- Shield Connection Unit

  When connecting NX Units to external devices, the Shield Connection Unit is used to connect the shield wire when the shield is used. You can ground more than one shield wire to the same ground pole to reduce the amount of wiring work for grounding. For the specifications of the Shield Connection Unit, refer to the *NX-series System Units User's Manual* (Cat. No. W523).

#### Type of Ground Terminals

The ground terminals are functional ground terminals.

Functional grounding is done to protect device and system functions, including prevention of noise from external sources, or prevention of noise from devices or equipment that could have harmful effects on other devices or equipment.

## DIN Track Contact Plates

A Unit that has a ground terminal also has a DIN Track contact plate on the back of the Unit.

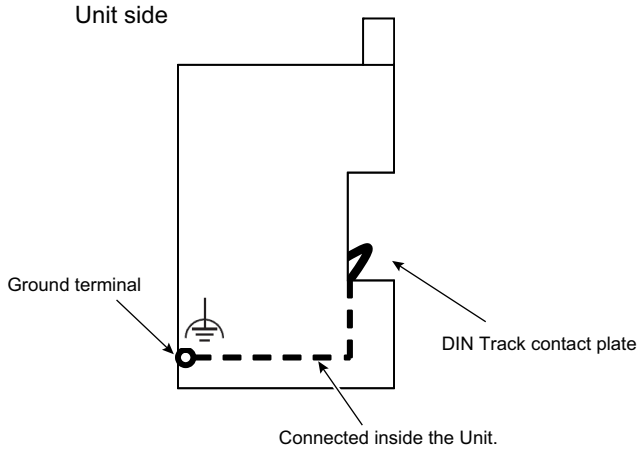


The DIN Track contact plate is connected internally to the ground terminal on the Unit.

This means that the ground terminal will be electrically connected to the DIN Track.

For information on the DIN Track contact plate on the PROFINET Coupler Unit, refer to *4-6 DIN Track Contact Plate* on page 4-12. For information on the NX Units that have a ground terminal, refer to the *NX-series System Units User's Manual* (Cat. No. W523).

## Grounding the Profinet IO Device Terminal

This section describes how to ground the ground terminals on the Profinet IO Device Terminal.

The functional ground terminals that are provided on some Units and the DIN Track are grounded.

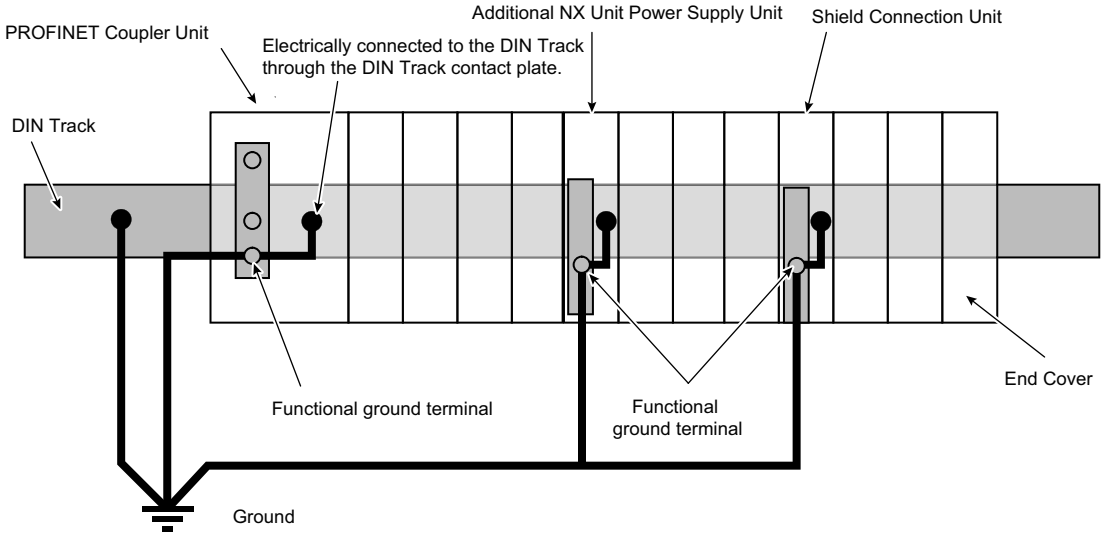

If the DIN Track is made of steel and the surface is not treated to produce an insulating material, you can omit grounding the functional ground terminal on any Unit that has one, as shown in the following figures.

■ DIN Track Made of Steel and Surface Not Insulated

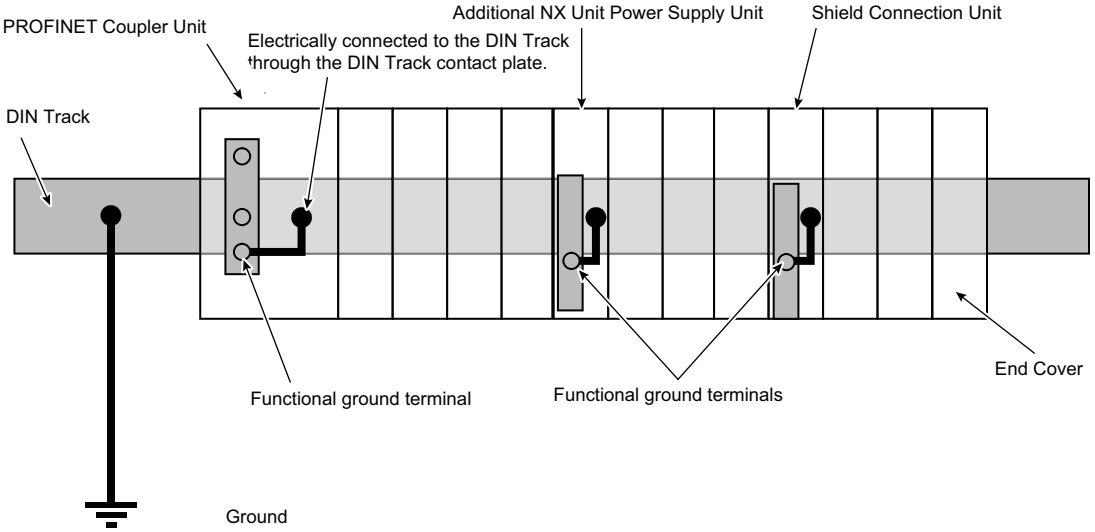


**Precautions for Correct Use**

- Ground the ground terminals and DIN Track through dedicated ground wires to a ground resistance of 100 Ω or less. The ground wire should not be more than 20 m long. Use a ground wire that is 2.0 $mm^2$ or larger. Refer to *Applicable Wires* on page 7-12 for the applicable ground wires for screwless clamping terminal blocks.
- If the DIN Track is not made of steel or if the surface is treated to produce an insulating material[*1], always connect ground wires to the ground terminals. Otherwise, noise may cause malfunctions.

*1. If the surface of the DIN Track is treated to produce an insulating material (e.g., anodized aluminum), the DIN Track contact plate will not be electrically connected to the DIN Track even if they are in physical contact.

## Grounding the DIN Track

Attach a crimped terminal to the ground wire and then connect it to mounting hole on the DIN Track with a screw to ground the DIN Track.

## Grounding the Profinet IO Device Terminal with Peripheral Devices and in Control Panels

Refer to *6-2-6 Grounding* on page 6-30 for the grounding procedures for the Profinet IO Device Terminal with peripheral devices and in control panels.

## Isolating the Profinet IO Device Terminal from the Control Panel

If the ground wire for the PROFINET Coupler Unit or an NX Unit with a ground terminal is shared with power equipment, noise will adversely affect the Units.

You can use OMRON NX-AUX01 DIN Track Insulation Spacers with PFP-50N or PFP-100N DIN Tracks to isolate a Profinet IO Device Terminal from the control panel.

## Installing DIN Track Insulation Spacers and DIN Track

Secure the DIN Track Insulation Spacers to the control panel with screws, and then secure the DIN Track to the DIN Track Insulation Spacers. The recommended tightening torque for M4 screws is 1.2 N·m.

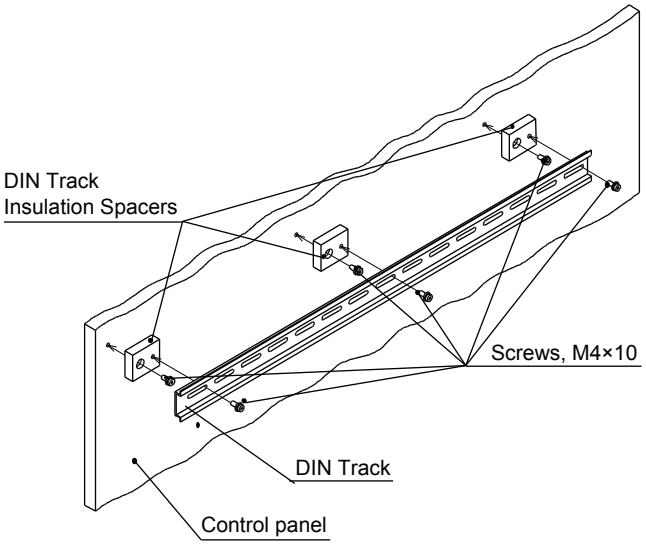


- DIN Track Insulation Spacers

  NX-AUX01 (OMRON Corporation)

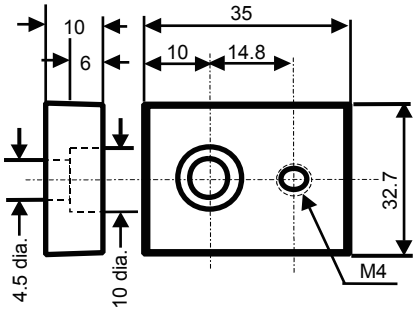


### Precautions for Correct Use

If you use DIN Track Insulation Spacers to install a Profinet IO Device Terminal, the height will be increased by approximately 10 mm. Make sure that the Profinet IO Device Terminal and connecting cables do not come into contact with other devices.

## 7-2-4 Precautions for Wiring the PROFINET IO Device Terminal Together with Computers and other Peripheral Devices

### ⚠ Caution

When you connect a computer or other peripheral device to the following Unit, either ground the 0-V side of the external power supply (i.e. Unit power supply) or do not ground it at all.

- PROFINET Coupler Unit with a non-isolated DC power supply (internal power supply circuits)

Depending on how the peripheral device is grounded, the external power supply (i.e. Unit power supply) may be shorted. Never ground the 24-V side of the power supply, as shown in the following figure.

**Grounding That Causes a 24-V Power Supply to Short**

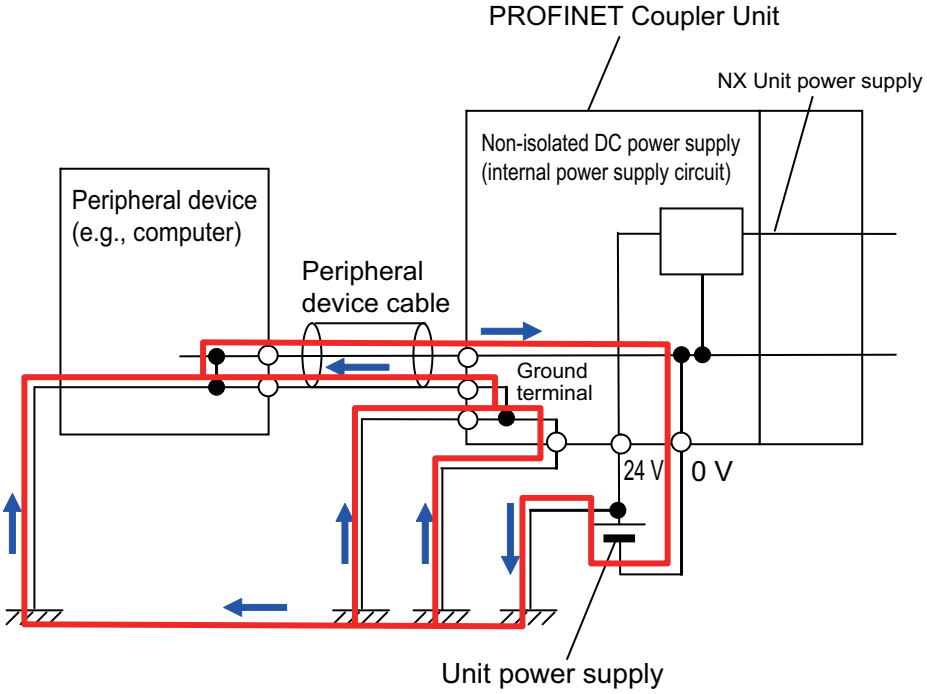


## 7-2-5 Wiring to the Screwless Clamping Terminal Block

This section describes how to connect wires to the screwless clamping terminal block on the PROFINET Coupler Unit, the installation and removing methods, and functions for preventing incorrect attachment.

You can connect ferrules that are attached to the twisted wires to the screwless clamping terminal block. You can also connect the twisted wires or the solid wires to the screwless clamping terminal block. If you connect the ferrules, all you need to do to connect the wires is to insert the ferrules into the terminal holes.

**⚠ WARNING**

Make sure that the voltages and currents that are input to the Units and PROFINET Coupler Unit are within the specified ranges.

Inputting voltages or currents that are outside of the specified ranges may cause failure or fire.

## Applicable Wires

The wires that you can connect to the screwless clamping terminal block are twisted wires, solid wires, and ferrules that are attached to the twisted wires. The following section describes the dimensions and processed methods for applicable wires.

### ● Dimensions of Wires Connected to the Terminal Block

The dimensions of wires that you can connect into the terminal holes of the screwless clamping terminal block are as in the figure below.

Process the applicable wires that are specified in the following description to apply the dimensions.

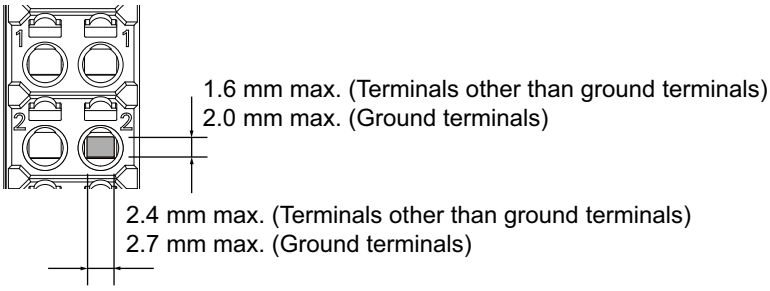


### ● Using Ferrules

If you use ferrules, attach the twisted wires to them.

Observe the application instructions for your ferrules for the wire stripping length when attaching ferrules.

Always use plated one-pin ferrules. Do not use unplated ferrules or two-pin ferrules.

The applicable ferrules, wires, and crimping tools are listed in the following table.

| Terminal types | Manufacturer | Ferrule model | Applicable wire ($mm^2$ (AWG)) | Crimping tool |
|---|---|---|---|---|
| Terminals other than ground terminals | Phoenix Contact | AI0,34-8 | 0.34 (#22) | Phoenix Contact (The figure in parentheses is the applicable wire size.)<br>CRIMPFOX 6 (0.25 to 6 $mm^2$, AWG24 to 10) |
| | | AI0,5-8 | 0.5 (#20) | |
| | | AI0,5-10 | | |
| | | AI0,75-8 | 0.75 (#18) | |
| | | AI0,75-10 | | |
| | | AI1,0-8 | 1.0 (#18) | |
| | | AI1,0-10 | | |
| | | AI1,5-8 | 1.5 (#16) | |
| | | AI1,5-10 | | |
| Ground terminals | | AI2,5-10 | 2.0 *1 | |

| Terminal types | Manufacturer | Ferrule model | Applicable wire ($mm^2$ (AWG)) | Crimping tool |
|---|---|---|---|---|
| Terminals other than ground terminals | Weidmuller | H0.14/12 | 0.14 (#26) | Weidmuller (The figure in parentheses is the applicable wire size.)<br>PZ6 Roto (0.14 to 6 $mm^2$, AWG26 to 10) |
| | | H0.25/12 | 0.25 (#24) | |
| | | H0.34/12 | 0.34 (#22) | |
| | | H0.5/14 | 0.5 (#20) | |
| | | H0.5/16 | | |
| | | H0.75/14 | 0.75 (#18) | |
| | | H0.75/16 | | |
| | | H1.0/14 | 1.0 (#18) | |
| | | H1.0/16 | | |
| | | H1.5/14 | 1.5 (#16) | |
| | | H1.5/16 | | |

*1. Some AWG14 wires exceed 2.0 $mm^2$ and cannot be used in the screwless clamping terminal block.

When you use any ferrules other than those in the above table, crimp them to the twisted wires so that the following processed dimensions are achieved.

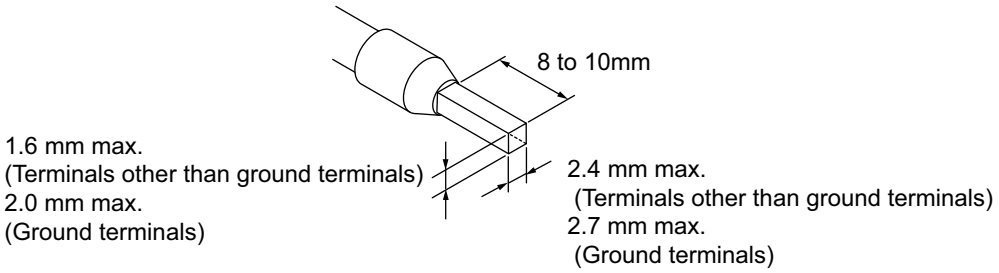


## ● Using Twisted or Solid Wires

If you use twisted wires or solid wires, use the following table to determine the correct wire specifications.

| Terminals | | Wire type | | | | Wire size | Conductor length (stripping length) |
|---|---|---|---|---|---|---|---|
| | | Twisted wires | | Solid wire | | | |
| Classification | Current capacity | Plated | Unplated | Plated | Unplated | | |
| All terminals except ground terminals | 2 A max. | Possible | Possible | Possible | Possible | 0.08 to 1.5 $mm^2$ (AWG 28 to 16) | 8 to 10 mm |
| | Greater than 2 A and 4 A or less | | Not possible | Possible*1 | Not possible | | |
| | Greater than 4 A | Possible*1 | | Not possible | | | |
| Ground terminals | --- | Possible | Possible | Possible*2 | Possible*2 | 2.0 $mm^2$ | 9 to 10 mm |

*1. Secure wires to the screwless clamping terminal block. Refer to *Securing Wires* for how to secure wires.

*2. With the NX-TB□□□1 Terminal Block, use twisted wires to connect the ground terminal. Do not use a solid wire.

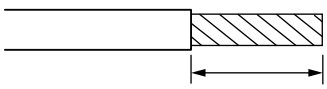

Conductor length (stripping length)

**Precautions for Correct Use**

- Use cables with suitable wire sizes for the carrying current. There are also restrictions on the current due to the ambient temperature. Refer to the manuals for the cables and use the cables correctly for the operating environment.
- Double-check all switches and other settings and double-check all wiring to make sure that they are correct before turning ON the power supply.
  Use the correct wiring parts and tools when you wire the system.
- For twisted wires, strip the sheath and twist the conductor portion. Do not unravel or bend the conductor portion of twisted wires or solid wires.

**NG** **NG**

Unravel wires Bend wires

**Additional Information**

If more than 2 A will flow on the wires, use plated wires or use ferrules.

## Connecting/Removing Wires

This section describes how to connect and remove wires.

### Terminal Block Parts and Names

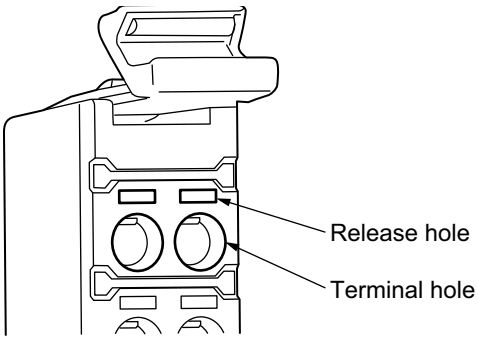


### Required Tools

Use a flat-blade screwdriver to connect and remove wires.

Use the following flat-blade screwdriver.

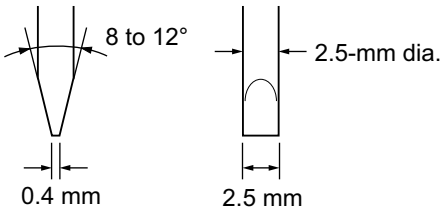

Recommended screwdriver

| Model | Manufacturer |
|---|---|
| SZF 0-0,4X2,5 | Phoenix Contact |

## Connecting Ferrules

Insert the ferrule straight into the terminal hole.

It is not necessary to press a flat-blade screwdriver into the release hole.

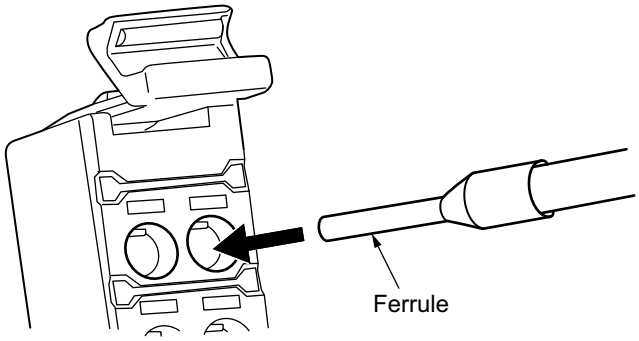


After you make a connection, make sure that the ferrule is securely connected to the terminal block.

## Connecting Twisted Wires/Solid Wires

Use the following procedure to connect the twisted wires or solid wires to the terminal block.

**1** Press the a flat-blade screwdriver diagonally into the release hole.

Press at an angle of 10° to 15°.

If you press in the screwdriver correctly, you will feel the spring in the release hole.

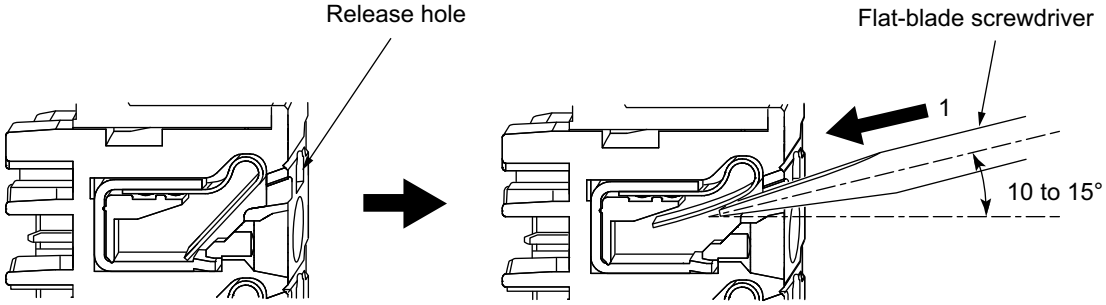


**2** Leave the flat-blade screwdriver pressed into the release hole and insert the twisted wire or the solid wire into the terminal hole.

Insert the twisted wire or the solid wire until the stripped portion is no longer visible to prevent shorting.

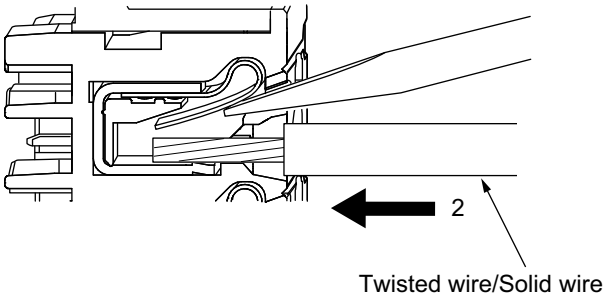

**3** Remove the flat-blade screwdriver from the release hole.

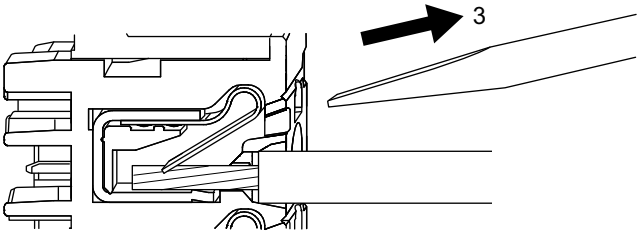


After you make a connection, make sure that the twisted wire or the solid wire is securely connected to the terminal block.

**Precautions for Safe Use**

- Do not press the flat-blade screwdriver straight into the release hole. Doing so may break the terminal block.

**NG** **OK**

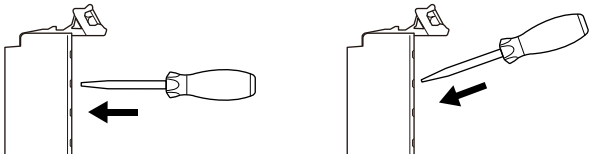

- When you insert a flat-blade screwdriver into a release hole, press it down with a force of 30 N max. Applying excessive force may damage the terminal block.
- Do not tilt or twist the flat-blade screwdriver while it is pressed into the release hole. Doing so may break the terminal block.

**NG** **NG**

- Make sure that all wiring is correct.
- Do not bend the cable forcibly. Doing so may sever the cable.

## Securing Wires

It is necessary to secure wires to the screwless clamping terminal block depending on the wire types that are used or the current flows on the wires.

The following table gives the necessity for securing wires.

| Terminals | | Wire type | | | | |
|---|---|---|---|---|---|---|
| Classification | Current capacity | Ferrule | Twisted wires | | Solid wire | |
| | | | Plated | Unplated | Plated | Unplated |
| All terminals except ground terminals | 2 A max. | No | No | No | No | No |
| | Greater than 2 A and 4 A or less | | | Not Possible | Yes | Not Possible |
| | Greater than 4 A | | Yes | | Not Possible | |
| Ground terminals | --- | | No | No | No | No |

Use the following procedure to secure the wires.

**1** Prepare a cable tie.

A cable tie can be used with a width of 4 mm or less and a thickness of 1.5 mm or less.

Select a cable tie correctly for the operating environment.

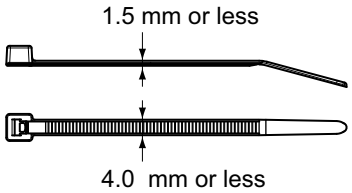


**2** Pass a cable tie through the hole for securing wires on the bottom of the screwless clamping terminal block

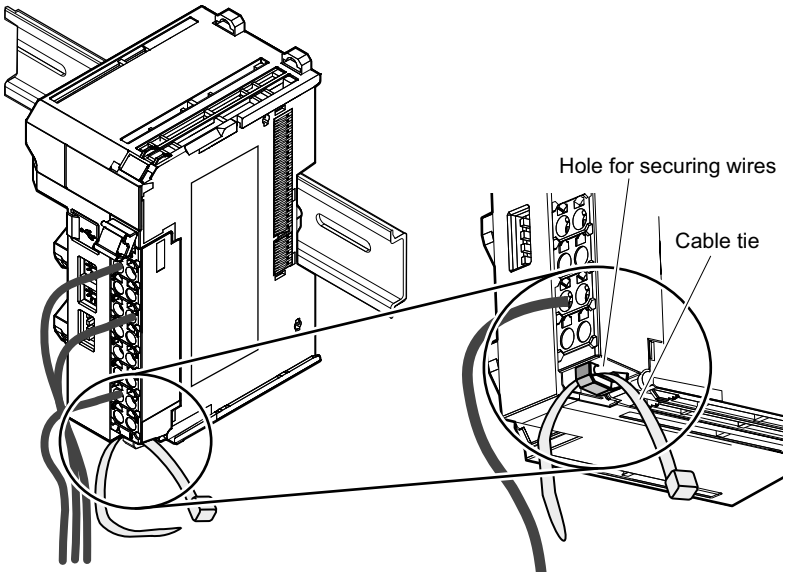

**3** Bundle the wires with a cable tie and secure them to the screwless clamping terminal block.

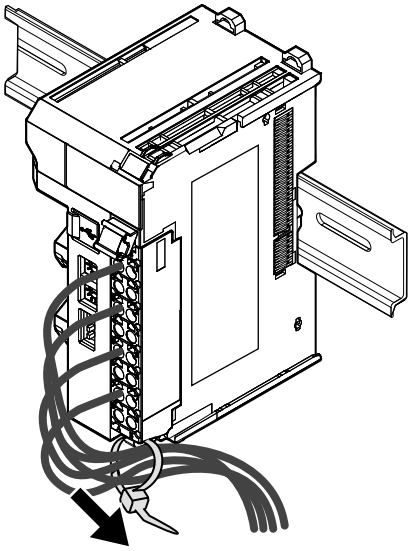

Secure wires within the range of 30 mm from the screwless clamping terminal block.

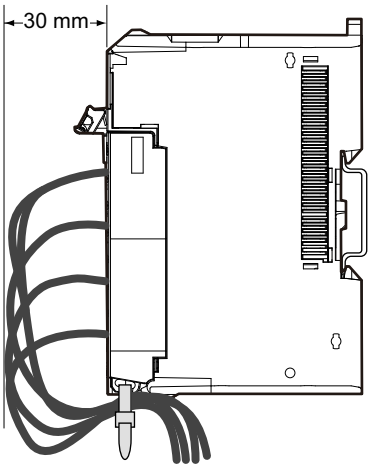

## ● Removing Wires

Use the following procedure to remove the wires from the terminal block.

The removal method is the same for ferrules, twisted wires, and solid wires.

If wires are secured firmly to the terminal block, release them first.

**1** Press the flat-blade screwdriver diagonally into the release hole.

Press at an angle of 10° to 15°.

If you press in the screwdriver correctly, you will feel the spring in the release hole.

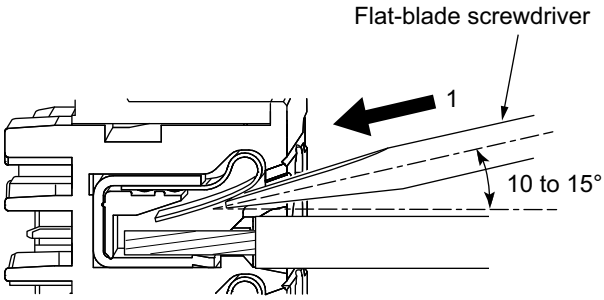


**2** Leave the flat-blade screwdriver pressed into the release hole and pull out the wire.

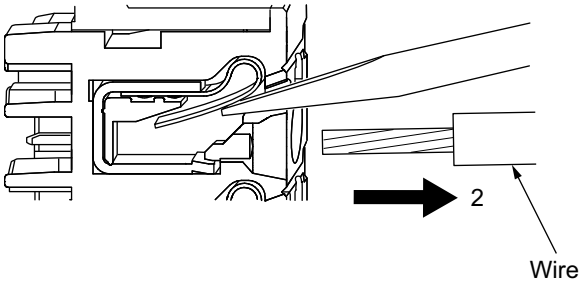


**3** Remove the flat-blade screwdriver from the release hole.

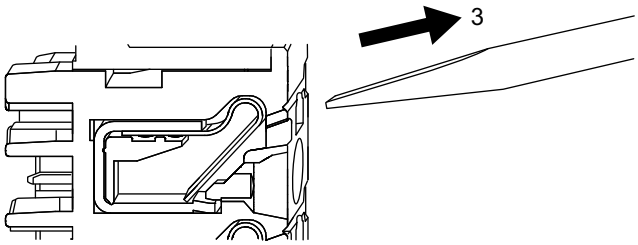

**Precautions for Safe Use**

- Do not press the flat-blade screwdriver straight into the release hole. Doing so may break the terminal block.

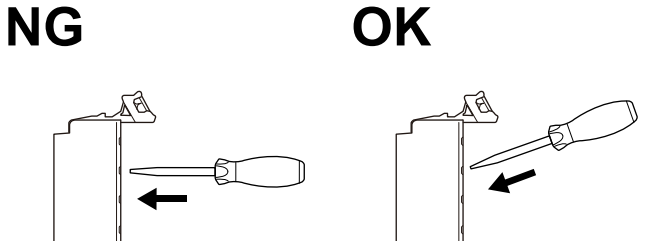


- When you insert a flat-blade screwdriver into a release hole, press it down with a force of 30 N max. Applying excessive force may damage the terminal block.
- Do not tilt or twist the flat-blade screwdriver while it is pressed into the release hole. Doing so may break the terminal block.

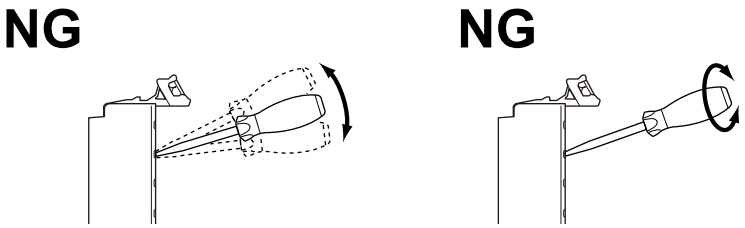


- Make sure that all wiring is correct.
- Do not bend the cable forcibly. Doing so may sever the cable.

## Removing a Terminal Block

**1** Press the lock lever on the terminal block and pull out the top of the terminal block to remove it.

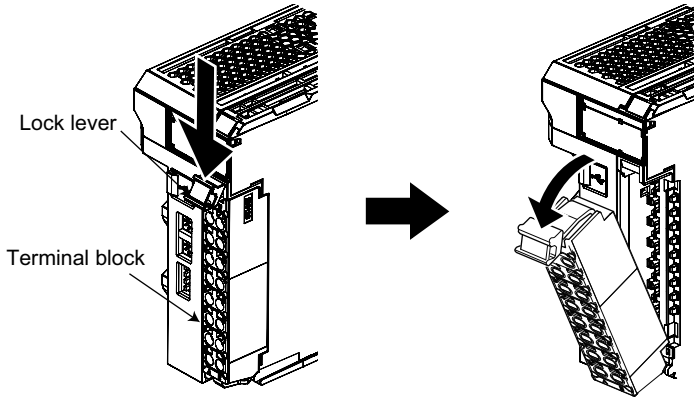

## Attaching a Terminal Block

**1** Mount the terminal block hook on the guide at the bottom of the PROFINET Coupler Unit, lift up the terminal block, and press in on the top of the terminal block until you hear it engage.
The terminal block will click into place on the Unit.
After you mount the terminal block, make sure that it is locked to the Unit.

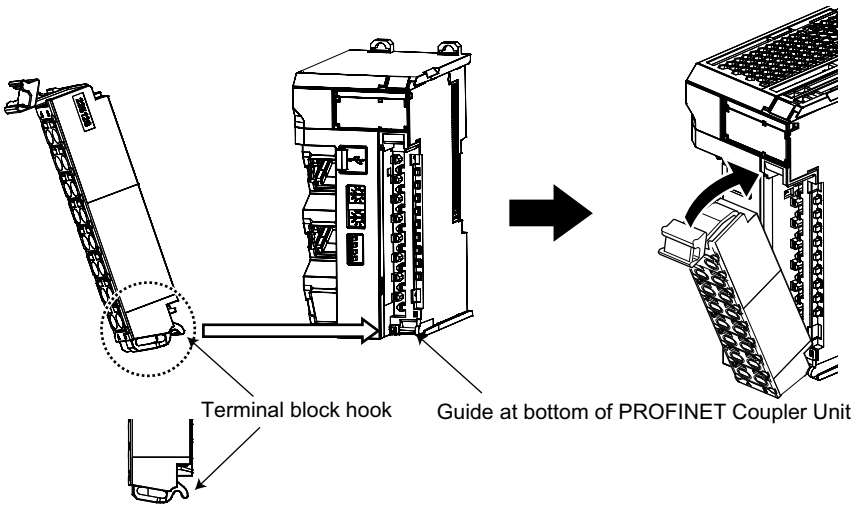


Mount a Terminal Block that is applicable to the model of the PROFINET Coupler Unit.
Refer to *4-5 Terminal Blocks* on page 4-10 for the applicable Terminal Blocks.

## Preventing Incorrect Attachment of Terminal Blocks

In order to prevent unintentionally installing the wrong terminal block, you can limit the combination of a Unit and a terminal block.

Insert three Coding Pins (NX-AUX02) into three of the six incorrect attachment prevention holes on the Unit and on the terminal block. Insert these pins into positions so that they do not interfere with each other when the Unit and terminal block are connected to each other.

You can use these pins to create a combination in which the wrong terminal block cannot be attached because the pin patterns do not match.

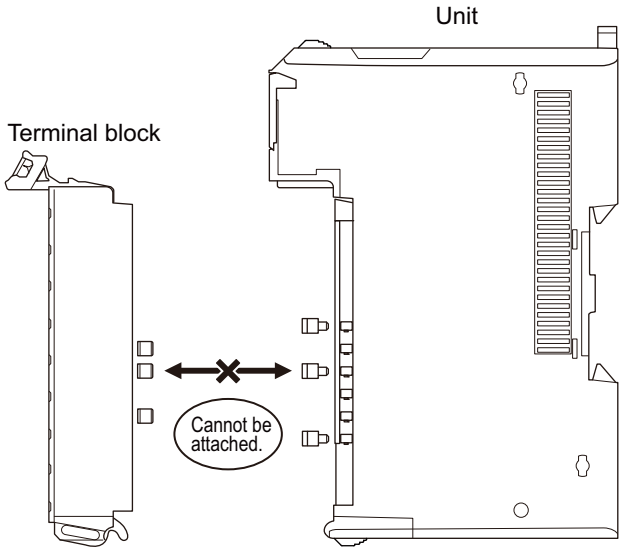

## Types of Coding Pins

There are two types of Coding Pins, both with their own unique shape: one for terminal blocks and one for Units.

Three pins come with each runner.

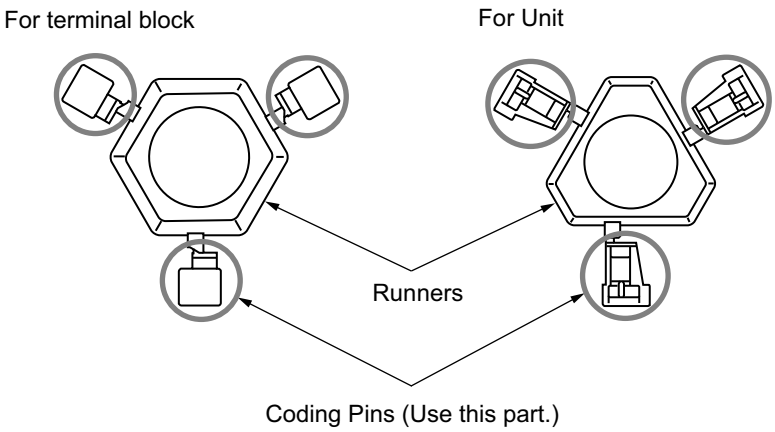


Use the following Coding Pins.

| Name | Model | Specification |
|---|---|---|
| Coding Pin | NX-AUX02 | For 10 Units<br>(Terminal Block: 30 pins, Unit: 30 pins) |

## Insertion Locations and Patterns of Coding Pins

Insert three Coding Pins of each on the terminal block and on the Unit at the positions designated by the numbers 1 through 6 in the figure below.

As shown in the following table, there are 20 unique pin patterns that can be used.

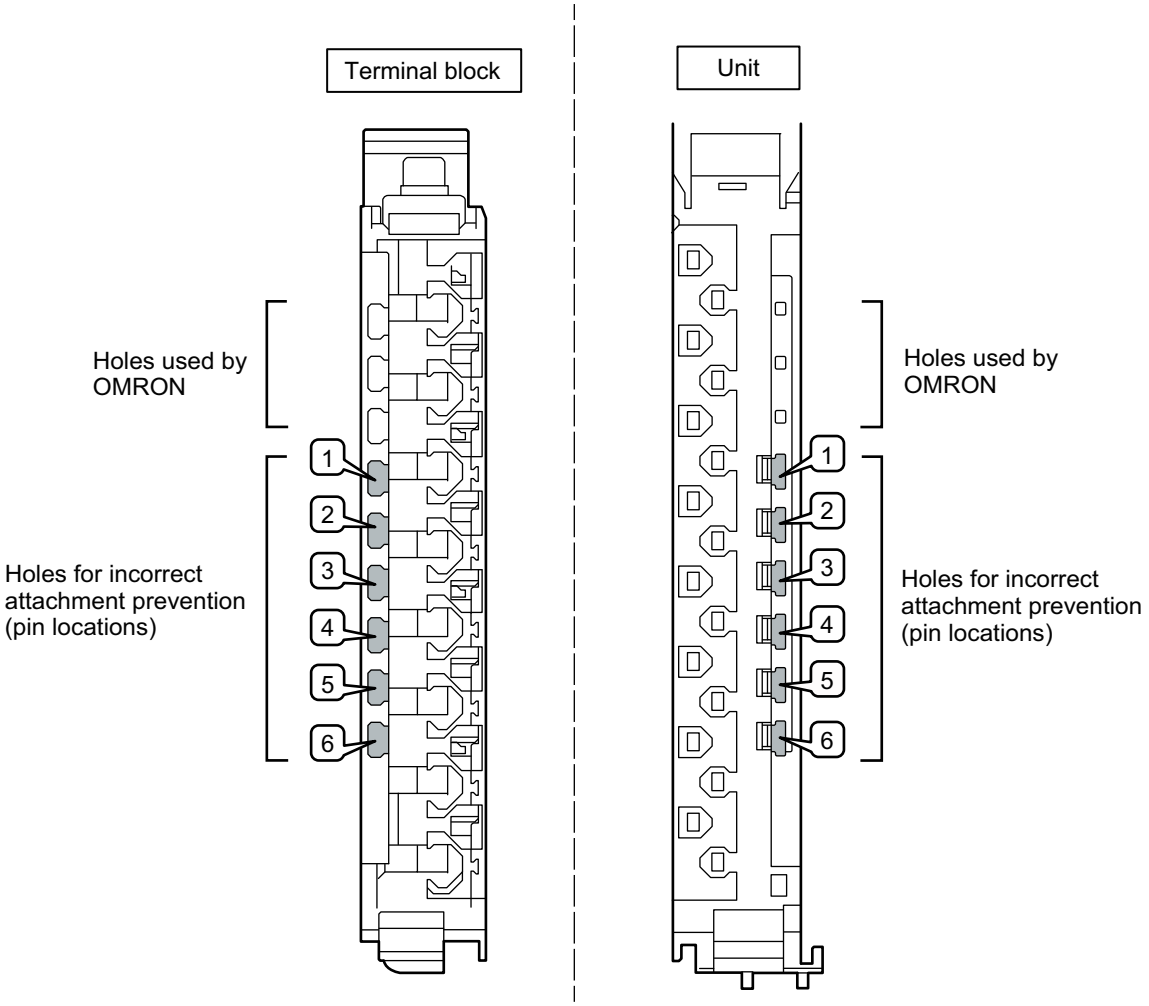


○: Pin inserted

| Pattern | Pin locations for terminal block | | | | | | Pin locations for Unit | | | | | |
|---|---|---|---|---|---|---|---|---|---|---|---|---|
| | 1 | 2 | 3 | 4 | 5 | 6 | 1 | 2 | 3 | 4 | 5 | 6 |
| No.1 | ○ | ○ | ○ | | | | | | | ○ | ○ | ○ |
| No.2 | ○ | ○ | | ○ | | | | | ○ | | ○ | ○ |
| No.3 | ○ | ○ | | | ○ | | | | ○ | ○ | | ○ |
| No.4 | ○ | ○ | | | | ○ | | | ○ | ○ | ○ | |
| No.5 | ○ | | ○ | ○ | | | | ○ | | | ○ | ○ |
| No.6 | ○ | | ○ | | ○ | | | ○ | | ○ | | ○ |
| No.7 | ○ | | ○ | | | ○ | | ○ | | ○ | ○ | |
| No.8 | ○ | | | ○ | ○ | | | ○ | ○ | | | ○ |
| No.9 | ○ | | | ○ | | ○ | | ○ | ○ | | ○ | |
| No.10 | ○ | | | | ○ | ○ | | ○ | ○ | ○ | | |
| No.11 | | ○ | ○ | ○ | | | ○ | | | | ○ | ○ |
| No.12 | | ○ | ○ | | ○ | | ○ | | | ○ | | ○ |
| No.13 | | ○ | ○ | | | ○ | ○ | | | ○ | ○ | |
| No.14 | | ○ | | ○ | ○ | | ○ | | ○ | | | ○ |
| No.15 | | ○ | | ○ | | ○ | ○ | | ○ | | ○ | |
| No.16 | | ○ | | | ○ | ○ | ○ | | ○ | ○ | | |
| No.17 | | | ○ | ○ | ○ | | ○ | ○ | | | | ○ |
| No.18 | | | ○ | ○ | | ○ | ○ | ○ | | | ○ | |
| No.19 | | | ○ | | ○ | ○ | ○ | ○ | | ○ | | |
| No.20 | | | | ○ | ○ | ○ | ○ | ○ | ○ | | | |

To make the maximum of 20 patterns, purchase two sets of NX-AUX02 Pins. (One set for 10 Units.)

**Precautions for Correct Use**

- OMRON uses the holes other than No. 1 to 6 in the figure on the previous page. If you insert a Coding Pin into one of the holes used by OMRON on the terminal block side, it would be impossible to mount the terminal block on a Unit.
- Do not use Coding Pins that have been attached and then removed. If you use them again, they may fall off.

## Inserting the Coding Pins

**1** Hold the pins by the runner and insert a pin into one of the incorrect attachment prevention holes on the terminal block or on the Unit.

Terminal block

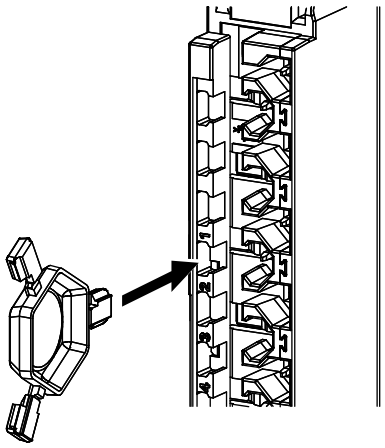

Unit

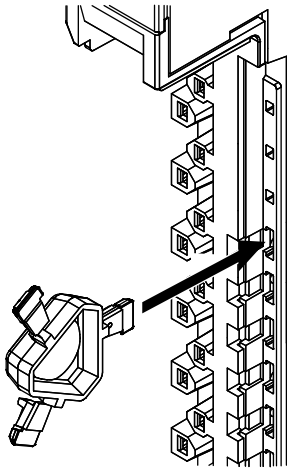

**2** Rotate the runner to break off the Coding Pin.

Terminal block

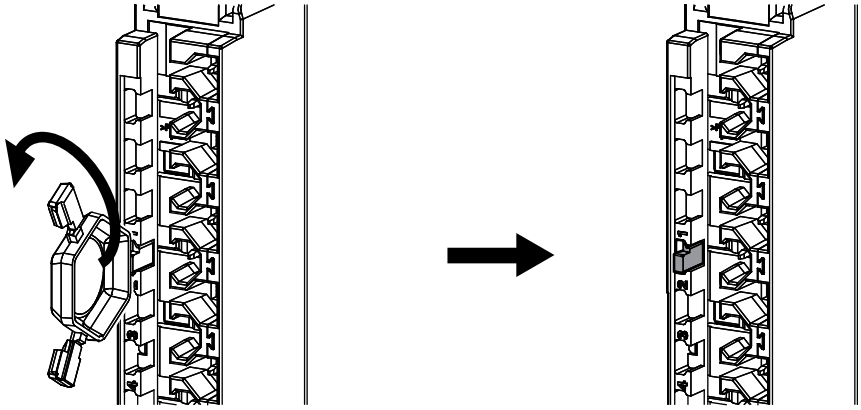

Unit

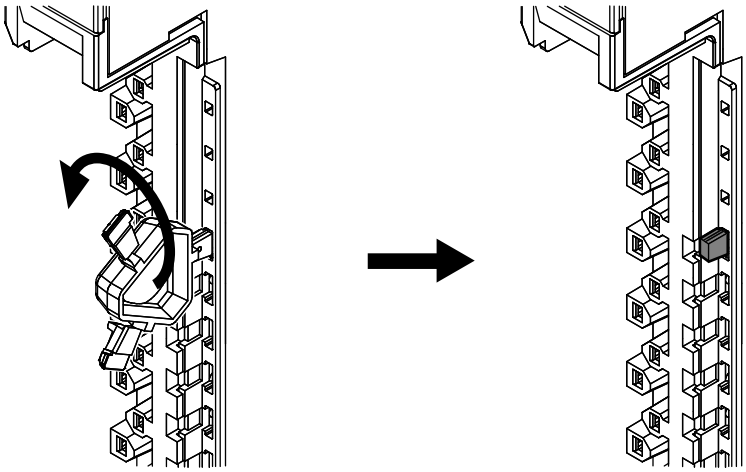

# 7-3 Connecting USB Cable

The PROFINET Coupler Unit can be connected directly to a computer in which the Sysmac Studio is installed through a USB cable.

## Connection Method

Use a commercially available USB certified cable to connect the computer in which the Sysmac Studio is installed to the peripheral USB port on the PROFINET Coupler Unit.

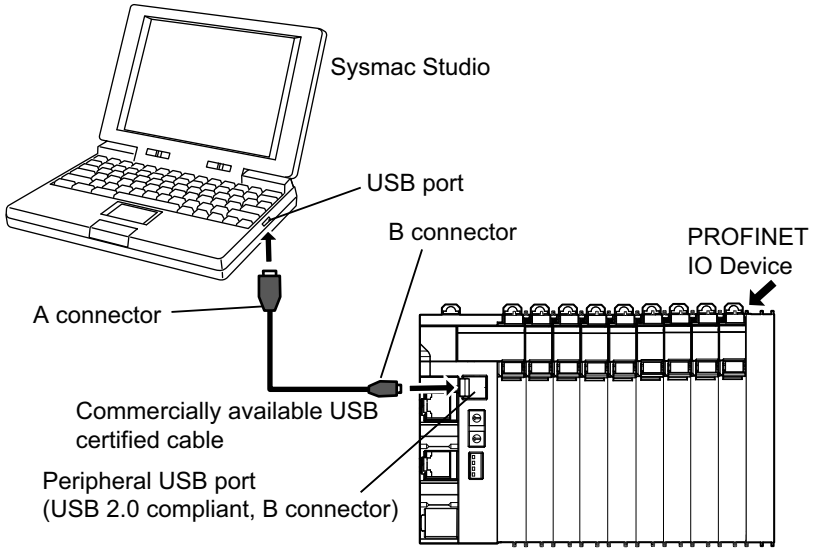


## Connecting Cable

Use the following cable to connect the PROFINET Coupler Unit and the computer in which the Sysmac Studio is installed.

| Unit port | Computer port | Network type (communications mode) | Model | Length |
|---|---|---|---|---|
| Peripheral USB port (USB 2.0 compliant, B connector) | USB port | USB 2.0 | Commercially available USB certified cable (A connector and B connector) | 5 m max. |

## Preparations

To connect the PROFINET Coupler Unit to a computer with USB, you must first install a USB driver in the computer.

When you install the Sysmac Studio, a USB driver for a USB connection will be automatically installed in the computer.

When you turn ON the Unit power supply to the Profinet IO Device Terminal and connect the PROFINET Coupler Unit and computer with a USB cable, the computer will automatically recognize the device and start installing the USB driver.

## Making Settings with the Sysmac Studio

The connection between the PROFINET Coupler Unit and computer is set up with the Sysmac Studio.

Refer to *2-3-1 Connection Method and Procedures* on page 2-9 for the procedure to connect to the Sysmac Studio.

## Restrictions for USB Connections

When you connect the computer to the PROFINET Coupler Unit, the USB specifications impose the following restrictions.

- You can connect only one computer to only one PROFINET Coupler Unit with a USB connection. You cannot connect more than one of each at the same time.
- You cannot use more than one software tool simultaneously with the USB connection.
- Do not disconnect the USB cable while the Sysmac Studio is online with the PROFINET Coupler Unit. Always place the Sysmac Studio offline before you disconnect the USB cable.

# 7-4 Wiring External Signal Lines

Refer to the sections on wiring in the user's manuals for individual NX Units for information on wiring the external IO signal lines between the external devices and the NX Units.

For precautions on wiring in control panels, refer to *6-2 Control Panel Installation* on page 6-23.

# 8

# PROFINET Communications

This section provides an introduction to PROFINET communications.

**8-1 Communication protocols . . . . . 8-2**
8-1-1 RT and IRT . . . . . 8-2

# 8-1 Communication protocols

PROFINET uses Ethernet and TCP, UDP and IP as basis for the communication between the devices.

## 8-1-1 RT and IRT

The TCP/IP and UDP/IP communication protocols apply a considerable amount of control overhead which will slow down data transmission speed which is required for PROFINET applications. To facilitate Real-Time capabilities for data exchange, the PROFINET uses a specific protocol of Real-Time (RT) Communication. This protocol cancels some of the flow control and addressing in comparison with the TCP/IP and UDP/IP.

For the prioritized transmission of RT-frames, Real-Time communication uses the VLAN tag as defined in IEEE 802.1Q.

# 9



# Setting Up the PROFINET Coupler Unit

This section describes the procedures used to set up the PROFINET Coupler Unit.


**9-1 Settings and Setting Procedures . . . . . 9-2**

9-1-1 Items to Set . . . . . 9-2

9-1-2 IO Device Terminal Parameters . . . . . 9-4

9-1-3 Setting Procedures . . . . . 9-4

**9-2 Setting IO Device Terminal Parameters . . . . . 9-5**

9-2-1 Items to Set . . . . . 9-5

9-2-2 Setting the NX Unit Configuration Information . . . . . 9-5

9-2-3 Unit Operation Settings . . . . . 9-10

9-2-4 Unit Application Data . . . . . 9-11

9-2-5 Sysmac Studio Functions Used as Required . . . . . 9-12

**9-3 Transferring and Comparing Settings . . . . . 9-16**

9-3-1 Transferring IO Device Terminal Setting Information through the USB Port on the PROFINET Coupler Unit . . . . . 9-16

9-3-2 Comparing Settings . . . . . 9-18

**9-4 Setting PROFINET IO Device Name . . . . . 9-19**

**9-5 Setting PROFINET IO Data . . . . . 9-20**

**9-6 NX Unit IO Allocation . . . . . 9-27**

9-6-1 Basic IO Mapping . . . . . 9-27

9-6-2 Sysmac Studio IO Allocation Functions . . . . . 9-29

9-6-3 Endian . . . . . 9-30

# 9-1 Settings and Setting Procedures

As examples, this section describes the PROFINET Coupler Unit setting items and procedure and the settings that are required to access IO data in Profinet IO Devices from a third party PROFINET IO Controller. For other settings and setting procedures, refer to the operation manual for the Sysmac Studio that you will use.

## 9-1-1 Items to Set

The settings that are used to access IO data in the IO PROFINET Coupler Unit from a third party PROFINET IO Controller can be divided into two areas:

- NX-IO Units data
- PROFINET data

### NX-IO Units Data

This data is set using Sysmac Studio.

| Setting | Description |
|---|---|
| Setting IO Device Terminal Configuration and Operation Settings | Adjust the settings of the IO Device Terminal with the configuration and operation settings of the NX Units and PROFINET Coupler Unit using Sysmac Studio. |

### PROFINET Data

This data is set using a configuration tool such as the OMRON Network Configurator.

| Setting | Description |
|---|---|
| Setting PROFINET IO Device Name | Supported |
| Setting PROFINET IO Data | Configure the Profinet IO Controller to connect to the PROFINET Coupler Unit using a GSDML file. |
| Allocate the IO Data | Allocate the IO Data to the IO Controller CPU's variables. |

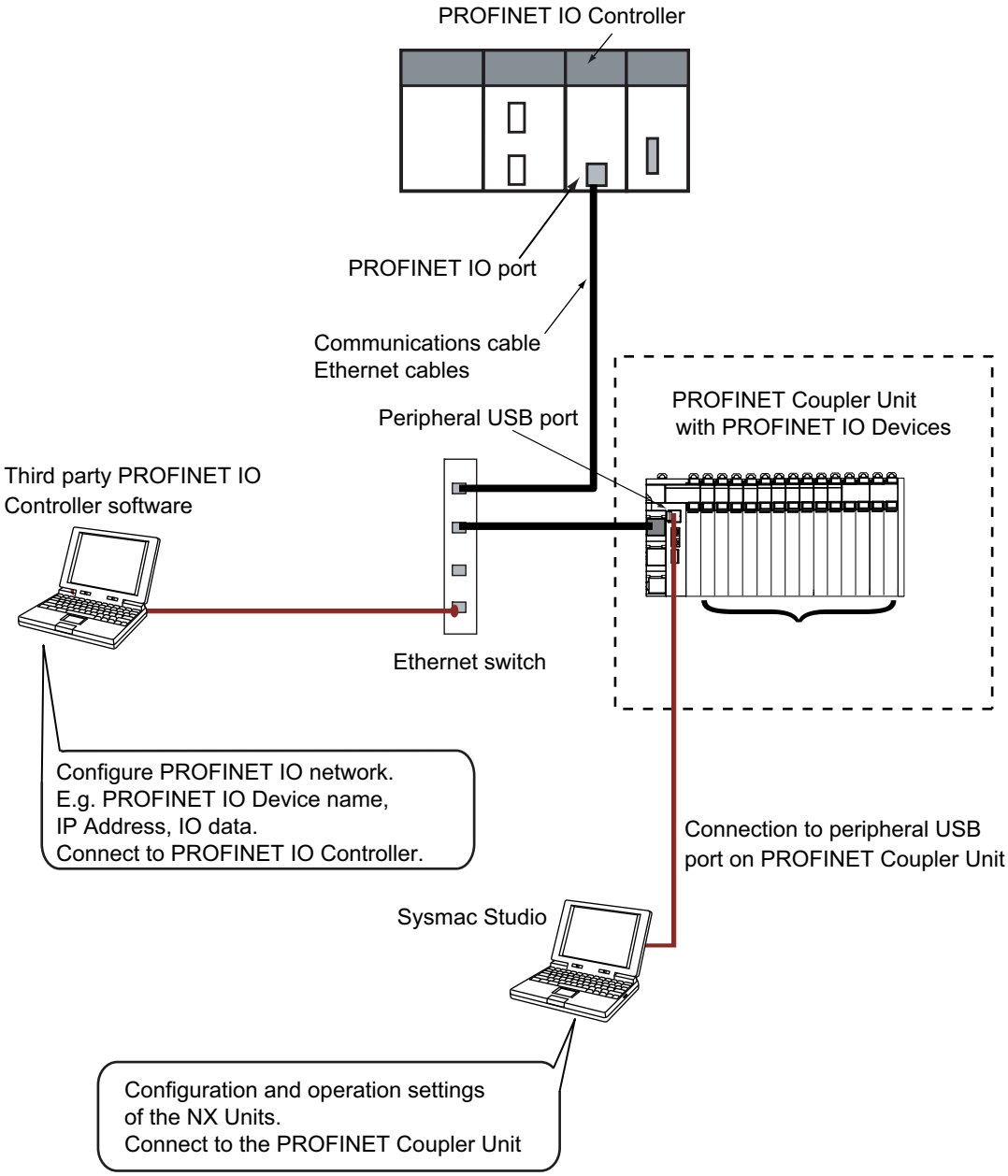
PROFINET IO Controller
PROFINET IO port
Communications cable
Ethernet cables
Peripheral USB port
PROFINET Coupler Unit
with PROFINET IO Devices
Third party PROFINET IO
Controller software
Ethernet switch
Configure PROFINET IO network.
E.g. PROFINET IO Device name,
IP Address, IO data.
Connect to PROFINET IO Controller.
Connection to peripheral USB
port on PROFINET Coupler Unit
Sysmac Studio
Configuration and operation settings
of the NX Units.
Connect to the PROFINET Coupler Unit

## 9-1-2 IO Device Terminal Parameters

Parameters must be set to ensure that the IO Device Terminal operates as intended and performs data exchange with other PROFINET devices. The settings are listed in the following table.

| Setting | | | Description |
|---|---|---|---|
| IO Device Terminal configuration and operation settings | Configuration information | NX Unit configuration information | This information describes the configuration of the IO Device Terminal. |
| | | IO allocation information | This information specifies what IO data in the NX Units of the IO Device Terminal to exchange with process data communications. |
| | NX Unit operation settings | | These are the operation settings for each NX Unit in the IO Device Terminal. |
| | NX Unit application data settings | | These data settings enable the functionality that is specific to each NX Unit. |

Refer to *9-2 Setting IO Device Terminal Parameters* on page 9-5 for details on the settings.

## 9-1-3 Setting Procedures

Use the following procedures to set up an IO Device Terminal for connection to a third party PROFINET IO Controller.

| | |
|---|---|
| **1** Setting PROFINET Coupler Unit parameters with Sysmac Studio<br>Refer to *9-2 Setting IO Device Terminal Parameters* on page 9-5. | (1) *Setting the NX Unit Configuration Information* on page 9-5 |
| | ↓ |
| | (2) *NX Unit IO Allocation* on page 9-27 |
| | ↓ |
| | (3) *Unit Operation Settings* on page 9-10 |
| | ↓ |
| | (4) *Unit Application Data* on page 9-11 |
| | ↓ |
| | (5) *Sysmac Studio Functions Used as Required* on page 9-12 |

↓

**2** *9-3 Transferring and Comparing Settings* on page 9-16

↓

**3** *9-4 Setting PROFINET IO Device Name* on page 9-19

↓

**4** *9-5 Setting PROFINET IO Data* on page 9-20

↓

**5** *9-6 NX Unit IO Allocation* on page 9-27

# 9-2 Setting IO Device Terminal Parameters

This section describes how to set the IO Device Terminal parameters with Support Software. The Sysmac Studio is used as an example.

For Support Software other than the Sysmac Studio, refer to the operation manual for the Support Software that you are using.

## 9-2-1 Items to Set

The following settings must be adjusted in the IO Device Terminal.

| Name | | Description |
|---|---|---|
| Configuration information | IO Device Terminal configuration information | This information describes the configuration of the IO Device Terminal: the number and order of NX Units mounted after the PROFINET Coupler Unit, individual NX Unit information, and information about the PROFINET Coupler Unit. |
| | IO allocation information | This information defines the IO data in the PROFINET Coupler Unit and the NX Units. |
| IO Device Terminal operation settings | | The IO Device Terminal operation settings are for the PROFINET Coupler Unit and the NX Units. |
| NX Unit application data | | This data controls the functionality that is specific to each NX Unit. Not all NX Units have Unit application data. |

## 9-2-2 Setting the NX Unit Configuration Information

Specify the NX Unit configuration information for the IO Device Terminal, which consists of a PROFINET Coupler Unit and NX Units.

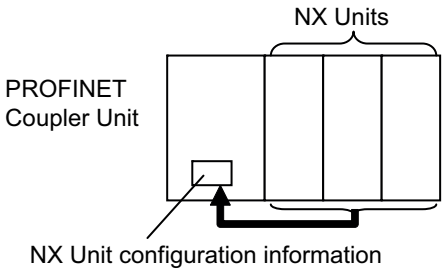


### Settings in the NX Unit Configuration Information

- **PROFINET Coupler Unit**

  The PROFINET Coupler Unit settings are listed below.

  You can set only the items that have “Yes” in the *Settable* column.

| Setting | Settable | Description | Data range | Default |
|---|---|---|---|---|
| Device name | | This is the name of the PROFINET Coupler Unit.<br>Use the PROFINET Configuration Edit Tab Page to change this setting. | --- | E *** (* is a serial number from 001).<br>The default value is automatically generated based on the node address. |
| Model name | | This is the model of the PROFINET Coupler Unit. | --- | The model number of the PROFINET Coupler Unit is shown. |
| Product name | | This is the product name. | --- | PROFINET Coupler Unit. |
| Unit version | | This is the Unit version of the PROFINET Coupler Unit. | --- | --- |
| NX Unit Number | | This number represents the logical position of the PROFINET Coupler Unit. | --- | 0 |
| NX Unit Mounting Setting | | This setting enables or disables the mounting of an NX Unit. You cannot directly edit these settings in the PROFINET Coupler Unit. | --- | --- |
| Serial Number | | This is the serial number of the PROFINET Coupler Unit. You can get the serial number to set the serial number of the actual PROFINET Coupler Unit. | --- | --- |
| Supply Power/Available Power [W] | | The power that is currently drawn by the NX Units and the maximum available power supply capacity are given. | --- | -/10.00 |
| Unit width [mm] | | This is the width of the PROFINET Coupler Unit. | --- | 46 |
| Unit operation settings | Yes | These are the Unit operation settings for the PROFINET Coupler Unit. Click the **Edit Unit Operation Settings** button to edit these settings. | --- | Refer to *9-2-3 Unit Operation Settings* on page 9-10. |
| Number of mounted Units | | This is the number of mounted NX Units. | --- | --- |
| NX Unit Connection Time (s) | Yes | This is the wait time for the NX Units to connect to the IO Device Terminal. | 3 to 200 s | 3 s |
| Serial Number Check Method | Yes | Set this setting to *Setting = Actual device* to compare the serial numbers of the NX Units at these times: when the power is turned ON and after the PROFINET Coupler Unit is restarted. The serial numbers of the NX Units saved in the Unit configuration information are compared with the actual serial numbers of the NX Units.*1<br>If differences are found, a Unit Configuration Verification Error will occur. | No check.<br>Setting = Actual device | No check. |

*1. If this setting is set to *Setting = Actual device* and you replace an NX Unit in the IO Device Terminal, a Unit Configuration Verification Error will occur. A Unit Configuration Verification Error will also occur if you swap the mounting position of two Units of the same model. If it becomes necessary to replace an NX Unit, or swap the mounting positions of two Units of the same model while this setting is set to *Setting = Actual device*, you must correct the Unit configuration information and download it to the PROFINET Coupler Unit. Set this parameter to *Setting = Actual device* if strict management of the equipment configuration is required.

### ● NX Units

| Name | Settable | Description | Data range | Default |
|---|---|---|---|---|
| Device name | Yes | The name of the NX Unit. | --- | N* (Where * is a serial number from 1) |
| Model name | | This is the model number of the NX Unit. | --- | --- |
| Product name | | This is the product name. | --- | --- |
| Unit version | | This is the Unit version of the NX Unit. | --- | --- |
| NX Unit Number | | This number represents the logical position of the NX Unit. Numbers are automatically assigned from the left-most mounting position. | --- | --- |
| NX Unit Mounting Setting | Yes | This setting enables or disables the mounting of an NX Unit. Refer to *11-2 NX Unit Mounting Settings* on page 11-4 for details on this setting. | Enabled or Disabled | Enabled |
| Serial Number | | This is the serial number of the NX Unit. You can get the serial number to set the serial number of the actual PROFINET Coupler Unit. | --- | 0 |
| Supply Power/Available Power [W] | | The power that is currently drawn by the NX Units and the maximum available power supply capacity are given. This item is for an Additional NX Unit Power Supply Unit. | --- | -/10.00 |
| Power consumption [W] | | This is the power consumption of the NX Units from the NX bus. This setting applies to Units other than an Additional NX Unit Power Supply Unit. | --- | Refer to the manual for the specific NX Unit. |
| Unit width [mm] | | This is the width of the NX Unit. | --- | Refer to the manual for the specific NX Unit. |
| IO allocation settings | Yes | These are the IO allocation settings for the NX Unit. Click the **Edit IO Allocation Settings** button to edit these settings. You cannot change this setting for System Units. | --- | Refer to the manual for the specific NX Unit. |
| Unit operation settings | Yes | These are the Unit operation settings for the NX Unit. Click the **Edit Unit Operation Settings** button to edit these settings. You cannot change this setting for System Units. | --- | Refer to the manual for the specific NX Unit. |

## Setting the NX Unit Configuration Information

### ● Creating the Unit Configuration Information with the Edit IO Device Terminal Configuration Tab Page

**1** Create a new Sysmac Studio project.

**2** Double-click **NX-PNC202** under **Configurations and Setup** in the Multiview Explorer or right-click **NX-PNC202** under **Configurations and Setup** and select ***Edit***.

The Edit IO Device Terminal Configuration Tab Page is displayed.

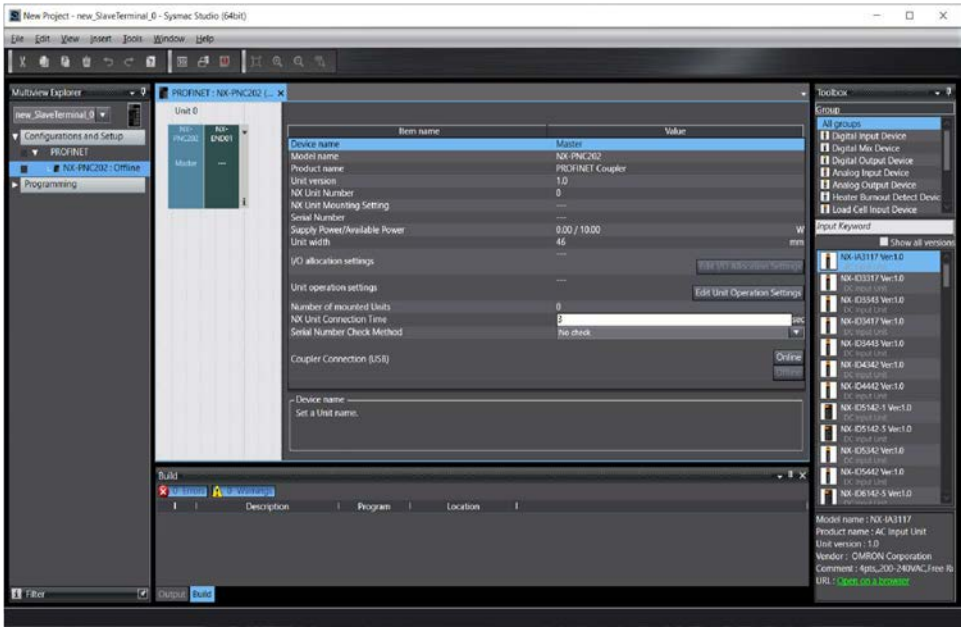

**3** Drag the NX Unit from the Toolbox to the Edit Configuration Pane and drop it on the IO Device Terminal.

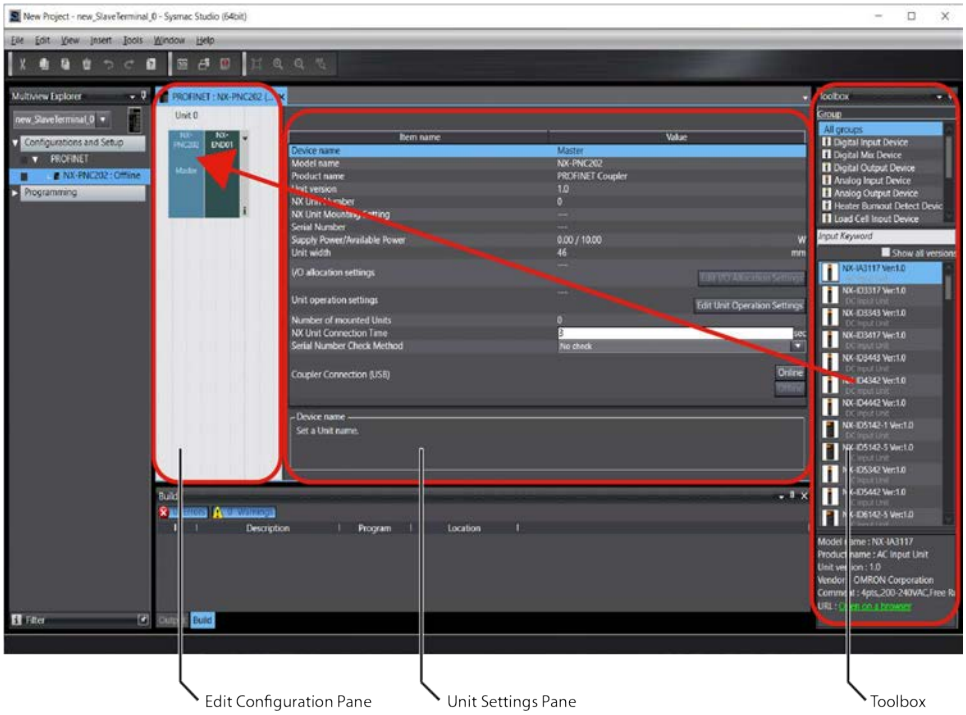


| Item | Description |
|---|---|
| Edit Configuration Pane | You can edit the Unit configuration information for the IO Device Terminal here. |
| Unit Settings Pane | This list displays the setting information for the currently selected Unit.<br>• **Edit Unit Operation Settings** button: Click this button to edit the Unit operation settings. |
| Toolbox | This area shows the NX Units by groups and individual Units. |

**4** Set the Unit configuration information in the Unit Settings Pane.

**Precautions for Correct Use**

If you turn ON the power to a Profinet IO Device Terminal before you create or transfer the Unit configuration information to the Profinet IO Device Terminal, the TS indicator on the front panel of the PROFINET Coupler Unit will flash green at 0.5-second intervals. This means that the Profinet IO Device Terminal is operating without any Unit configuration information.

In this state, the Profinet IO Device Terminal will start and operate based on the physical Unit configuration when the power is turned ON. The Unit configuration is not checked.

- IO data of Standard NX Units will be mapped to the Profinet IO Device Terminal's IO data blocks by their physical order. Refer to *9-6-1 Basic IO Mapping* on page 9-27 for more information.

## Creating Unit Configuration Information Based on the Actual Configuration

This method uses the physical Unit configuration for the Unit configuration information.

Connect the Sysmac Studio to the PROFINET Coupler Unit. Compare and merge with the actual Unit configuration to read the Unit configuration of the IO Device Terminal. Set the settings as a Profinet device on the PROFINET Configuration Edit Tab Page. Finally, create the IO Device Terminal configuration and operation settings on the Edit IO Device Terminal Configuration Tab Page.

Refer to *9-2-5 Sysmac Studio Functions Used as Required* on page 9-12 for details on the comparing and merging with the actual Unit configuration of the IO Device Terminal.

## 9-2-3 Unit Operation Settings

### Unit Operation Settings for the PROFINET Coupler Unit

The operation settings of the PROFINET Coupler Unit are listed below.

| Setting | Setting range | Default | Description |
|---|---|---|---|
| Fail-soft Operation Setting/Fail-soft Operation Setting | Stop or Fail-soft operation | Stop | Set whether to use fail-soft operation for the IO Device Terminal.<br>Select *Fail-soft operation* to perform fail-soft operation.<br>Refer to *11-7 Fail-soft Operation* on page 11-27 for details on fail-soft operation. |

## Unit Operation Settings for the NX Unit

The settings that are available depend on the type of the NX Unit.

For example, Digital Input Units have a setting for the input filter value, and Digital Output Units have a setting for the output value at load rejection.

Refer to the manual for the specific NX Unit for the settings and their meanings.

## Editing the Unit Operation Settings

You can edit the Unit operation settings for the PROFINET Coupler Unit and NX Units as necessary.

**1** In the Unit Settings Pane, click the **Edit Unit Operation Settings** button.

The Edit Unit Operation Settings Tab Page is displayed.

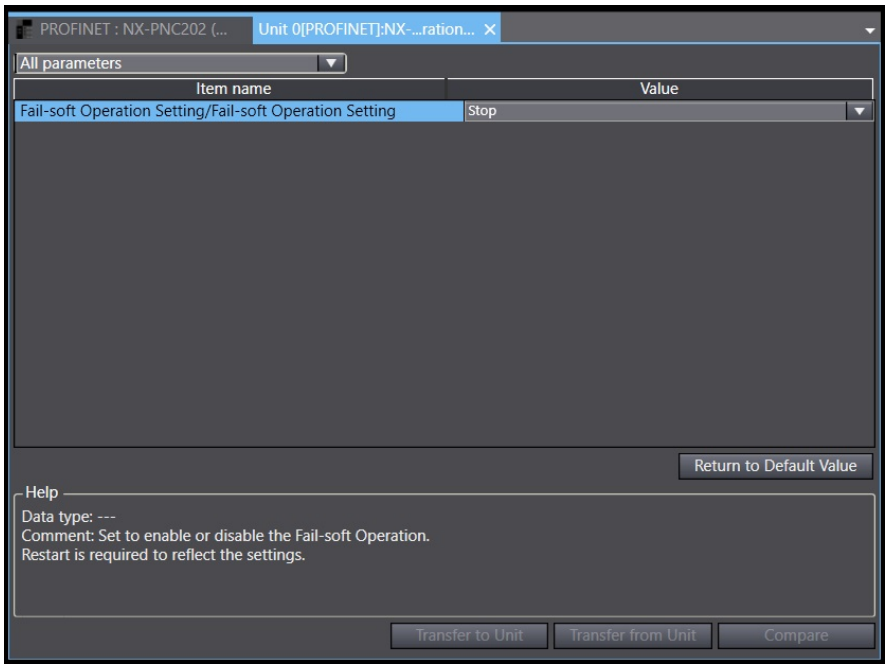


**2** Change the set value of each setting.

## 9-2-4 Unit Application Data

The Unit application data is the data that enables the functionality that is specific to each NX Unit. Not all NX Units have Unit application data.

Refer to the manual for NX Units that have Unit application data for the method to set and transfer Unit application data.

## 9-2-5 Sysmac Studio Functions Used as Required

You can use the following functions on the Sysmac Studio.

- Getting NX Unit serial numbers
- Comparing and merging with actual Unit configuration of the IO Device Terminal
- Exporting/importing NX Unit settings
- Uploading IO Device Terminal settings through the USB port on the PROFINET Coupler Unit
- Adding additional Coupler Units

### Comparing and Merging with Actual Unit Configuration of the IO Device Terminal

You can compare the Unit configuration information in an IO Device Terminal that was created offline with the actual Unit configuration. You can also use this command to merge a configuration that was created offline with the actual configuration.

**1** Go online, right-click anywhere in the Edit IO Device Terminal Configuration Tab Page, and select ***Compare and Merge with Actual Unit Configuration***.

The actual Unit configuration is read and compared with the Unit configuration on the Sysmac Studio.The results are displayed in the Compare and Merge with Actual Unit Configuration Dialog Box.

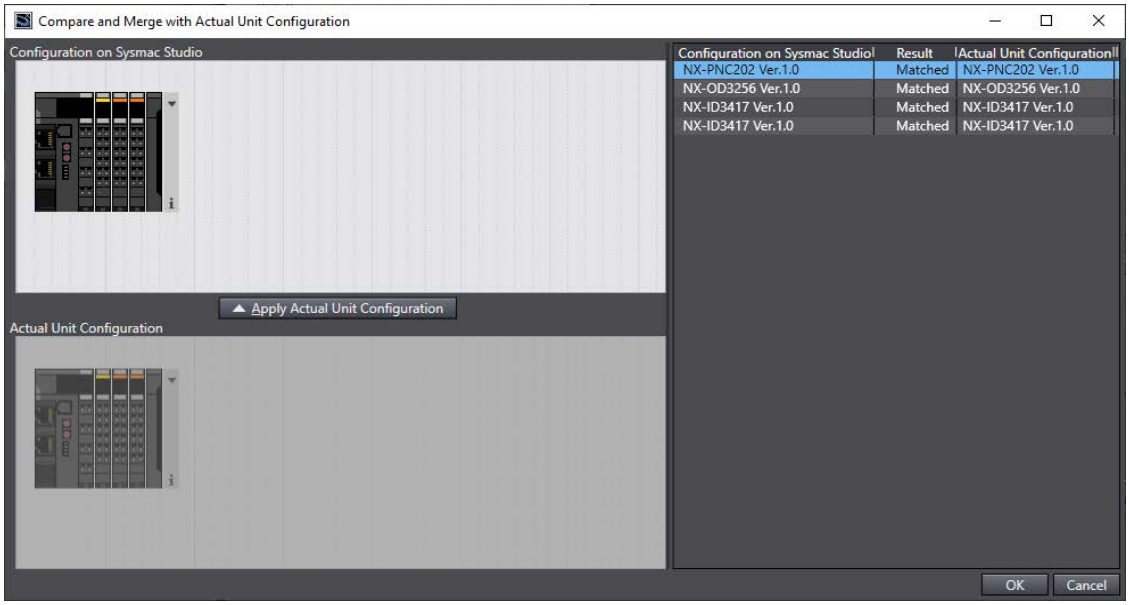


**2** To merge with actual Unit configuration, click the **Apply Actual Unit Configuration** button.

The configuration information on the Sysmac Studio will now match the actual Unit configuration.

**3** Click the **OK** button.

The display returns to the Edit IO Device Terminal Configuration Tab Page.

**Precautions for Correct Use**

You can read only the Unit configuration in the IO Device Terminal by comparing and merging with the actual Unit configuration. You cannot read the IO allocation information, Unit operation settings, and Unit application data.

## Getting NX Unit Serial Numbers

If the serial number check method that is set in the PROFINET Coupler Unit is set to *Setting = Actual device*, you must download the Unit configuration information in which the serial numbers for the NX Units are set to the PROFINET Coupler Unit. Use the following procedure to apply the serial numbers of the actual devices to the serial numbers of the NX Units in the Unit configuration information on the Sysmac Studio. Refer to *9-2-2 Setting the NX Unit Configuration Information* on page 9-5 for information on checking serial numbers.

**1** Go online, right-click anywhere in the Edit IO Device Terminal Configuration Tab Page, and select ***Get Serial Numbers of All NX Units***.

An execution confirmation dialog box is displayed.

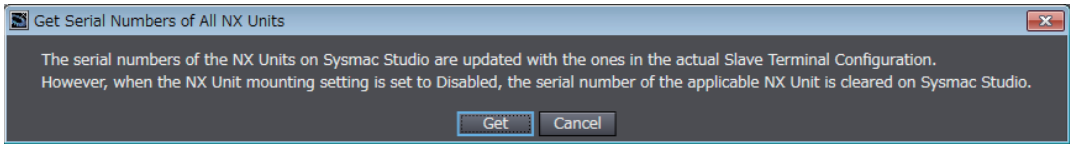


**2** Click the **Get** button.

The serial numbers are read from the actual Unit configuration, and applied to the Units in the configuration information for the IO Device Terminal on the Sysmac Studio.

## Exporting/Importing NX Unit Settings

On the Edit IO Device Terminal Configuration Tab Page, you can export the NX Unit operating settings and NX Unit application data for each NX Unit into a single file (extension .nsf).

The exported NX Unit setting file can be imported to add other NX Units with the same settings. To do this, go into the Edit IO Device Terminal Configuration Tab Page in a new project or the same project on the Sysmac Studio.

**1** On the Edit IO Device Terminal Configuration Tab Page, right-click the NX Unit to export and select ***Export NX Unit Settings***.

The Export NX Unit Settings Dialog Box is displayed.

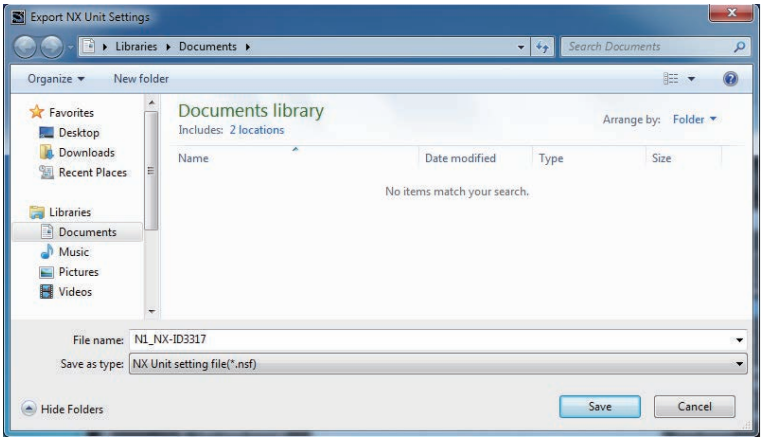


**2** Enter a file name, and then click the Save button.

An NX Unit setting file with an .nsf extension is saved.

To import a file, select ***Import NX Unit Settings and Insert New Unit*** in step 1, and specify the file to import.

## Uploading IO Device Terminal Settings through the USB Port on the PROFINET Coupler Unit

You can connect the Sysmac Studio to the USB port on the PROFINET Coupler Unit and transfer the settings information to the Sysmac Studio from the IO Device Terminal. With some Support Software, you can connect through Ethernet or with any other method except for a USB port. Refer to the operation manual for the Support Software for details.

Use the following procedure to upload the settings.

**1** Connect the Sysmac Studio to the peripheral USB port on the PROFINET Coupler Unit and place it online.

**2** Right-click the PROFINET Coupler Unit in the Edit IO Device Terminal Configuration Tab Page, and select ***Coupler Connection (USB)*** – ***Transfer from Coupler***.

An execution confirmation dialog box is displayed.

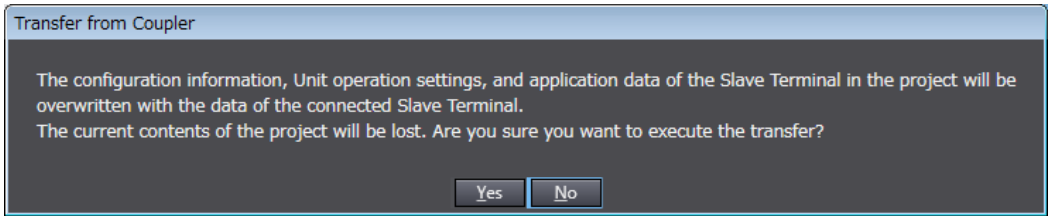


**3** Click the **Yes** button.

The configuration information, Unit operation settings, and Unit application data of the IO Device Terminal setting information are transferred.

## Adding Additional Coupler Units

A Sysmac Studio project can include multiple Coupler Unit device configurations.

Use the following procedure to add additional Coupler Unit configurations to a project when necessary.

**1** Right-click the IO Device Terminal icon and select ***Add Device*** or select ***Insert - IO Device Terminal - PROFINET Coupler.***

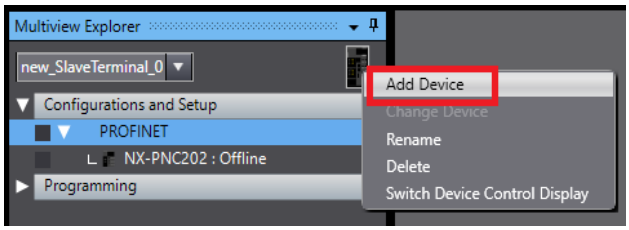


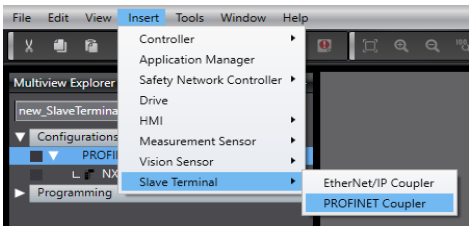


**2** Additional IO Device Terminal configurations can be accessed with the drop down selection menu.

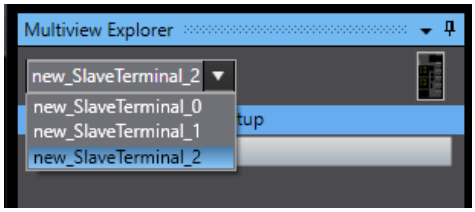

# 9-3 Transferring and Comparing Settings

This section describes how to transfer and compare IO Device Terminal settings that you set on the Support Software. The Sysmac Studio is used as an example.

For Support Software other than the Sysmac Studio, refer to the operation manual for the Support Software that you are using.

## 9-3-1 Transferring IO Device Terminal Setting Information through the USB Port on the PROFINET Coupler Unit

**⚠ WARNING**

Always confirm safety at the destination before you transfer the Unit configuration information, parameters, set values, or other data from the Sysmac Studio.
The devices or machines may operate unexpectedly, regardless of the operating mode of the Controller.

You can connect the Sysmac Studio to the USB port on the PROFINET Coupler Unit to transfer the IO Device Terminal settings information to the IO Device Terminal. With some Support Software, you can connect through Ethernet any other method except for a USB port. Refer to the operation manual for the Support Software for details.

Use the following procedure to transfer the settings.

**1** Connect the Sysmac Studio to the peripheral USB port on the PROFINET Coupler Unit and place it online.

**2** Right-click the PROFINET Coupler Unit in the Edit IO Device Terminal Configuration Tab Page, and select ***Coupler Connection (USB)*** – ***Transfer to Coupler***.

The Transfer to Coupler Dialog Box is displayed.

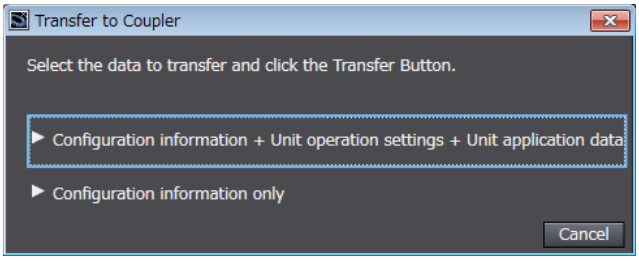


**3** Select the data to transfer.

- To transfer the configuration information, Unit operation settings, and Unit application data, select ***Configuration Information + Unit Operation Settings + Unit Application Data***.
- To transfer only the configuration information, select ***Configuration information only***.

An execution confirmation dialog box is displayed.

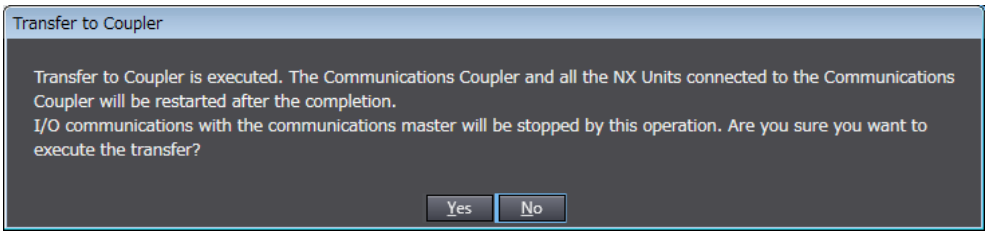


**4** Click the **Yes** button.

The specified data is transferred.

### Precautions for Correct Use

- The PROFINET IO Controller may detect an error when the IO Device Terminal is restarted after the IO Device Terminal setting information is transferred with a direct USB connection between the Sysmac Studio and PROFINET Coupler Unit. If an error is detected, you need to reset the error in the PROFINET IO Controller.
  Refer to *9-3 Transferring and Comparing Settings* on page 9-16 for a transfer method that does not produce an error on the PROFINET IO Controller.
- When the IO Device Terminal is restarted, all of the Units on the IO Device Terminal perform the same operation as when the power supply is cycled. Refer to the manuals for the specific Units for the operation that is performed when the power supply is turned ON.
- The IO Device Terminal setting information must be the same between the PROFINET IO Controller and the Profinet IO Device Terminal. When you transfer the IO Device Terminal setting information, always use the synchronization function from the Sysmac Studio that is connected to the CPU Unit.

## 9-3-2 Comparing Settings

To compare the IO Device Terminal settings, connect the Sysmac Studio to the USB port of the PROFINET Coupler Unit to compare. Use the following procedure.

Refer to *9-2-5 Sysmac Studio Functions Used as Required* on page 9-12 to compare the Unit configuration.

**1** Connect the Sysmac Studio to the USB port on the PROFINET Coupler Unit.

**2** In the Unit Settings Pane on the Edit IO Device Terminal Configuration Tab Page, click the **Online** button next to ***Coupler Connection (USB)*** for the target PROFINET Coupler Unit.

An execution confirmation dialog box is displayed.

**3** Click the **OK** button.

The Sysmac Studio will go online.

**4** Right-click the target PROFINET Coupler Unit and select ***Coupler Connection (USB) − Compare*** from the pop-up menu.

The results of the comparison are displayed as shown below.

When the Settings Are the Same:

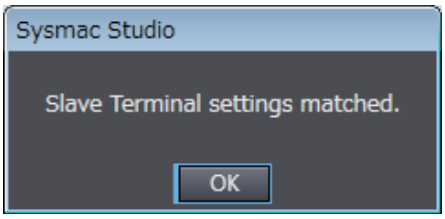


When the Settings Are Different:

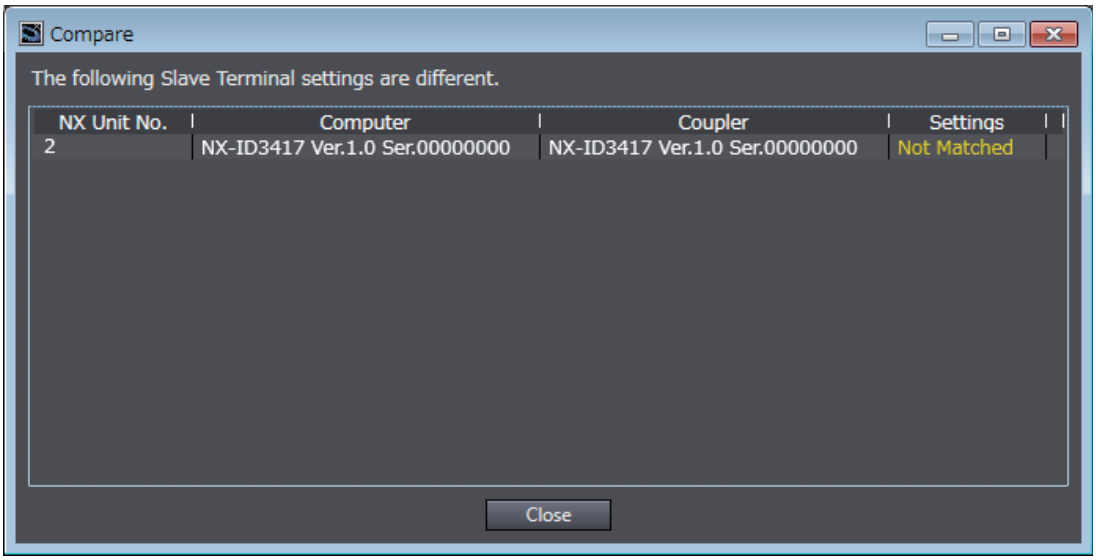

# 9-4 Setting PROFINET IO Device Name

In order to identify the PROFINET Coupler Unit on the PROFINET IO network, it needs to be assigned a PROFINET IO Device Name. This Device Name is an ASCII string, which is written to the IO Devices by the third party PROFINET IO Controller configuration software.

Using the Device Name the PROFINET IO Controller can configure parameter settings and establish I/O Data Exchange. It will assign an IP address to the PROFINET Coupler Unit based on the IO Controller's configuration.

Please refer to the third party PROFINET IO Controller documentation on how to configure the IO Device name.

**Additional Information**

- Be sure to have unique Device names for each of the IO Devices in the network. As the name is used as identification, duplicate names will result in communication failure.
- With the option “Reset to Factory - Mode 2 Reset communication parameters” the device name and IP address are reset to their default values.

# 9-5 Setting PROFINET IO Data

## 9-5-1 IO Allocation

The IO allocation information maps the IO data in the PROFINET Coupler Unit.The IO Device performs data exchange with the third party PROFINET IO Controller based on the IO allocation information.

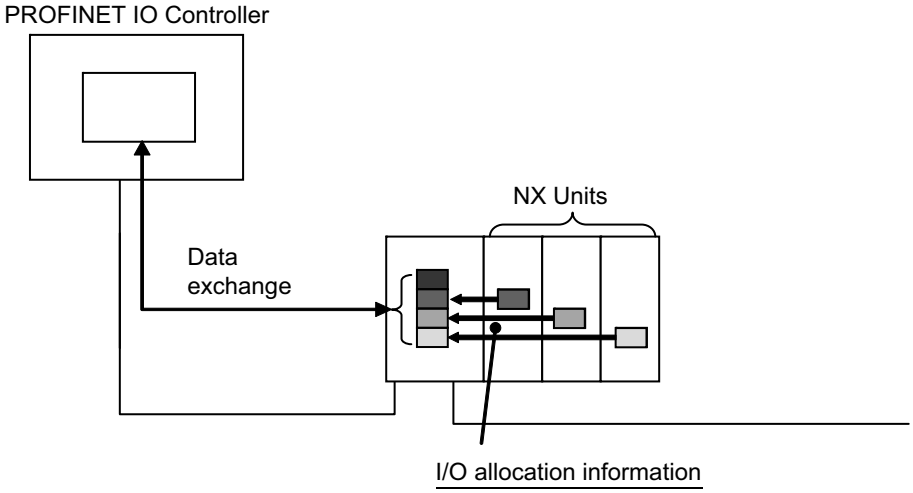


The PROFINET Coupler Unit and the NX Units contain default values for the IO allocation information. These default values are sufficient for a standard exchange of IO data. Change the settings as necessary.

Configure Profinet IO Controller to connect to PROFINET Coupler Unit using GSDML file.

To configure the PROFINET IO network with the Proinet Coupler Units, it is required to use the third party IO Controller configuration software. Typically you will need to connect the Personal Computer directly to the ethernet network.

With the software you can perform following steps:

**1** Import the PROFINET Coupler Unit's GSDML file into the configuration software.

Refer to the IO Controller manual for details on installing the GSDML file.
The GSDML file is available at the OMRON website
(https://industrial.omron.eu/en/products/NX-PNC202#ddf) for download.

After installation the OMRON NX-PNC202 will appear in the IO Device catalogue.

**2** Add the PROFINET Coupler Unit to the network configuration in the tool.

Refer to the IO Controller manual for details on how to build up the Profinet IO network including the PROFINET Coupler.

**3** Configure the IO Device names directly on the network.

Refer to *9-4 Setting PROFINET IO Device Name* on page 9-19 for details.

**4** Configure the IO Modules used for the PROFINET Coupler unit.

After adding the PROFINET Coupler to the network, the following IO Modules will be assigned to the IO Controller by default.

| Slot Number | Subslot Number | SlotName | Allocable Sub module Name | Default data | Direction | DataType | Number of Data-Type |
|---|---|---|---|---|---|---|---|
| 0x0 | 0x8000 | Interface | SUBMOD_X1 | - | - | - | - |
| | 0x8001 | Port1 | SUBMOD_X1P1 | - | - | - | - |
| | 0x8002 | Port2 | SUBMOD_X1P2 | - | - | - | - |
| 0x1 | - | Unit Status | Communication Coupler unit and Ethernet network status | X | Input | Unsigned16 | 2 |
| 0x2 | - | Unit Registration Status | NX Unit registration status, slots 001...063 | X | Input | Unsigned32 | 2 |
| 0x3 | - | Unit IO Data Active Status | NX Unit I/O data active status, slots 001...063 | X | Input | Unsigned32 | 2 |
| 0x4 | - | Unit Error Status | NX Unit error status, slots 001..063 | X | Input | Unsigned32 | 2 |
| 0x5 | - | Unit Error Clear | Sysmac Error Status Clear | X | Output | Unsigned16 | 1 |
| 0x6 | - | NX Unit Output Data | NX Unit Output Data | X | Output | Unsigned16 | 256 |
| 0x7 | - | NX Unit Input Data | NX Unit Input Data | X | Input | Unsigned16 | 256 |

The user can disable each slot.

Refer to the different possible module details below for details.
For each slot, you can select the appropriate modules you would like to use.

## Details of IO Data in the PROFINET Coupler Unit

This section describes the IO data in detail.

### Unit Status

| Data name | Description |
|---|---|
| Unit Status | This indicates the status conditions of the IO Device Terminal. |

The following table shows the structure of the bits in the Unit status.

| Bit | Name | Description |
|---|---|---|
| 0 | Reserved | - |
| 1 | Unit Type | Unit Type Flag. Always 1. |
| 2 | Reserved | - |
| 3 | Reserved | - |
| 4 | Observation | Sysmac Status - Observation |
| 5 | Minor Fault | Sysmac Status - Minor Fault |
| 6 | Partial Fault | Sysmac Status - Partial Fault |
| 7 | Critical Fault | Sysmac Status - Complete Fault |
| 8 | Port X1 Link Error | Ethernet port X1 down or up with 10Mb or half duplex |
| 9 | Port X2 Link Error | Ethernet port X2 down or up with 10Mb or half duplex |
| 10 | Reserved | - |
| 11 | Reserved | - |
| 12 | Reserved | - |
| 13 | Sysmac Error Status Clear Capable Flag | Sysmac Error Status Clear Capable<br>Default 1, Operate error clear 1=>0, Complete error clear 0=>1 |
| 14 | NX Unit error | Aggregated NX Unit error status, OR of bits 0..63 |
| 15 | NX Unit IO refresh | This bit has the following meaning.<br>1: Normal I/O communications (for all NX Units)<br>0: I/O communications stop (one or more NX Unit) |

**Additional Information**

Refer to *12-3-4 Event Codes for Errors and Troubleshooting Procedures* on page 12-11 for more information on observation status and faults.

### Ethernet network status

The Ethernet Network Status provides the status bits as below . It is defined as an Unsigned16, as bits.

| Bit | Name | Description |
|---|---|---|
| 0 | Port 1 Link Up | Ethernet port 1 link up |
| 1 | Port 1 Link 100Mb | Ethernet port 1 link is 100Mb |
| 2 | Port 1 Link Full Duplex | Ethernet port 1 link is full duplex |
| 3 | Port 1 Link Overload | Reserved for Ethernet port 1 link network load too high |
| 4 | Port 2 Link Up | Ethernet port 2 link up |
| 5 | Port 2 Link 100Mb | Ethernet port 2 link is 100Mb |
| 6 | Port 2 Link Full Duplex | Ethernet port 2 link is full duplex |
| 7 | Port 2 Link Overload | Reserved for Ethernet port 2 link network load too high |
| 8 | Reserved | - |

| Bit | Name | Description |
|---|---|---|
| 9 | Reserved | - |
| 10 | Reserved | - |
| 11 | Reserved | - |
| 12 | Reserved | - |
| 13 | Reserved | - |
| 14 | Reserved | - |
| 15 | Reserved | - |

## ● Communication Coupler unit and Ethernet network status

This is the combination of the Unit Status and the Ethernet Network Status.
Refer to bullets above for details.

## ● NX Unit Registration Status

| Data name | Description |
|---|---|
| NX Unit Registration Status 63 | This status tells whether the NX Units are registered in the Unit Configuration.<br>The status is acquired for as many NX Units as the numeric suffix at the end of the data name. Select the IO data with the appropriate numeric value based on the number of NX Units that are mounted.<br>This status is given as an array of BOOL data. The subscript of the array corresponds to the NX Unit number. A subscript of 0 indicates the PROFINET Coupler Unit.<br>Each bit has the following meaning.<br>TRUE: Registered<br>FALSE: Not registered<br><br>If the Unit configuration information is registered, the status is TRUE for each Unit that is registered.<br>If the Unit configuration information was automatically created (with only the actual Unit configuration information and no registered information), the status is FALSE for all Units.<br><br>The status is TRUE for NX Units that are set as unmounted Units.<br><br>Each bit is updated at the following times.<br>• If the Unit Configuration Information Is Registered:<br>The status changes to TRUE when the system is started.<br>The status changes to FALSE when the configuration information is cleared.<br>• If the Unit Configuration Information Is Automatically Created:<br>The status changes to TRUE when the configuration information is confirmed.<br>The status is always FALSE if the Unit configuration information is automatically created. |

## ● NX Unit IO Data Active Status

| Data name | Description |
|---|---|
| NX Unit IO Data Active Status 63 | This status tells whether the NX Units can process IO data communications.<br>The status is acquired for as many NX Units as the numeric suffix at the end of the data name. Select the IO data with the appropriate numeric value based on the number of NX Units that are mounted.<br>This status is given as an array of BOOL data. The subscript of the array corresponds to the NX Unit number. A subscript of 0 indicates the PROFINET Coupler Unit.<br>Each bit has the following meaning.<br>TRUE: The IO data in the NX Unit can be used for control.<br>FALSE: The IO data in the NX Unit cannot be used for control.<br><br>The status is FALSE for NX Units that are set as unmounted Units.<br><br>Each bit is updated when the operating status changes on the corresponding NX Unit |

## ● NX Unit Error Status

| Data name | Description |
|---|---|
| NX Unit Error Status 63 | This status tells whether an error exists on the NX Units.<br>The status is acquired for as many NX Units as the numeric suffix at the end of the data name. Select the IO data with the appropriate numeric value based on the number of NX Units that are mounted.<br>This status is given as an array of BOOL data. The subscript of the array corresponds to the NX Unit number. A subscript of 0 indicates the PROFINET Coupler Unit.<br>Each bit has the following meaning.<br>TRUE: Error<br>FALSE: No error<br><br>If the Unit configuration information is registered, the status is reported for only the NX Units for which the NX Unit Registration Status is TRUE (registered). This status is FALSE for all NX Units for which the NX Unit Registration Status is FALSE (not registered). If automatic generation*1 is used for the Unit configuration information, the status is given for all NX Units.<br><br>Each bit is set to TRUE when the level of the error is as follows:<br>• Minor fault<br>• Observation<br><br>The status is FALSE for NX Units that are set as unmounted Units.<br><br>Each bit is updated at the following times.<br>The status changes to TRUE when an error occurs.<br>The status changes to FALSE when the error is reset. Even if the cause of the error has been removed, you must reset the error for the status to change to FALSE. |

*1. This applies when only the physical Unit configuration information is used and the Unit configuration information is not registered.

## ● NX Error Clear

The Sysmac Error Clear provides the clear feature of the error status. It is defined as an Unsigned16, as bits.

| Bit | Name | Description |
|---|---|---|
| 0 | Sysmac Error Clear | The Sysmac Error is cleared when the coupler detects the rising edge of this bit from 0 to 1. |
| 1..15 | Reserved | |

Use the following sequence to resolve errors and clear the Sysmac error status:

1. Read error status (from Communication Coupler unit status and/or NX Unit error status).
2. If an error occurred investigate the cause and remove the error condition.
3. Before issuing the error clear command, confirm the state of the "Sysmac Status Clear Capable" flag. This is bit 13 of the Unit Status as explained above.
   Wait for this bit to be 1 and set the Sysmac Error Clear (bit 0) to 1.
4. Issuing the Sysmac Error Clear will set the Sysmac Status Clear Capable (Unit Status bit 13) to 0. Wait for this bit to be set back to 1.

This confirms the error clear operation succeeded.

## ● NX Unit Output Data

Refer to *9-6 NX Unit IO Allocation* on page 9-27 for details.

## ● NX Unit Input Data

Refer to *9-6 NX Unit IO Allocation* on page 9-27 for details.

## 9-5-2 Parameter Settings of the PROFINET Coupler Unit

Set the detailed parameter related to the PROFINET Coupler Unit.

Select the properties of the Unit Parameter module to be able to set the detailed parameter for the PROFINET Coupler Unit.

Parameter: Partial Failure Behaviour
Description: Select the behaviour when a partial failure occurs.
Options: Continue with Partial Fault
Stop

# 9-6 NX Unit IO Allocation

The detail input and output allocation is determined in the Sysmac Studio software. Use the following information to assign input and output data in the third party IO Controller.

## 9-6-1 Basic IO Mapping

The numbers used to identify NX Units in an IO Device Terminal are called Unit Numbers. These numbers are allocated automatically from left to right starting with 1 when the power is turned ON. It is not necessary for the user to set these numbers. The PROFINET Coupler Unit will have a unit number of 0.

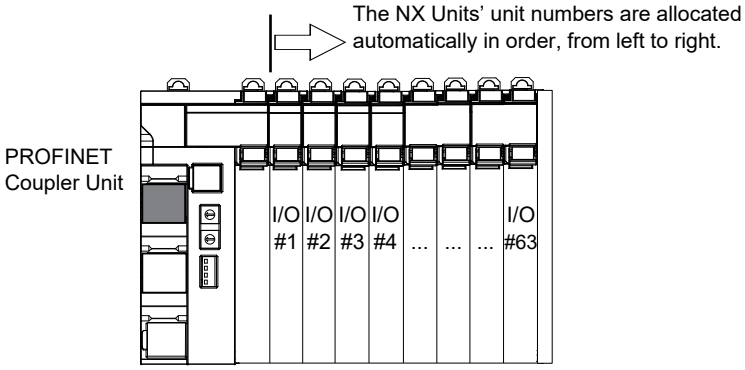


The type and order in which NX Units are mounted will determine the IO allocation and will also affect the Network Variable address assignments in the PLC. The figure below shows this mapping.

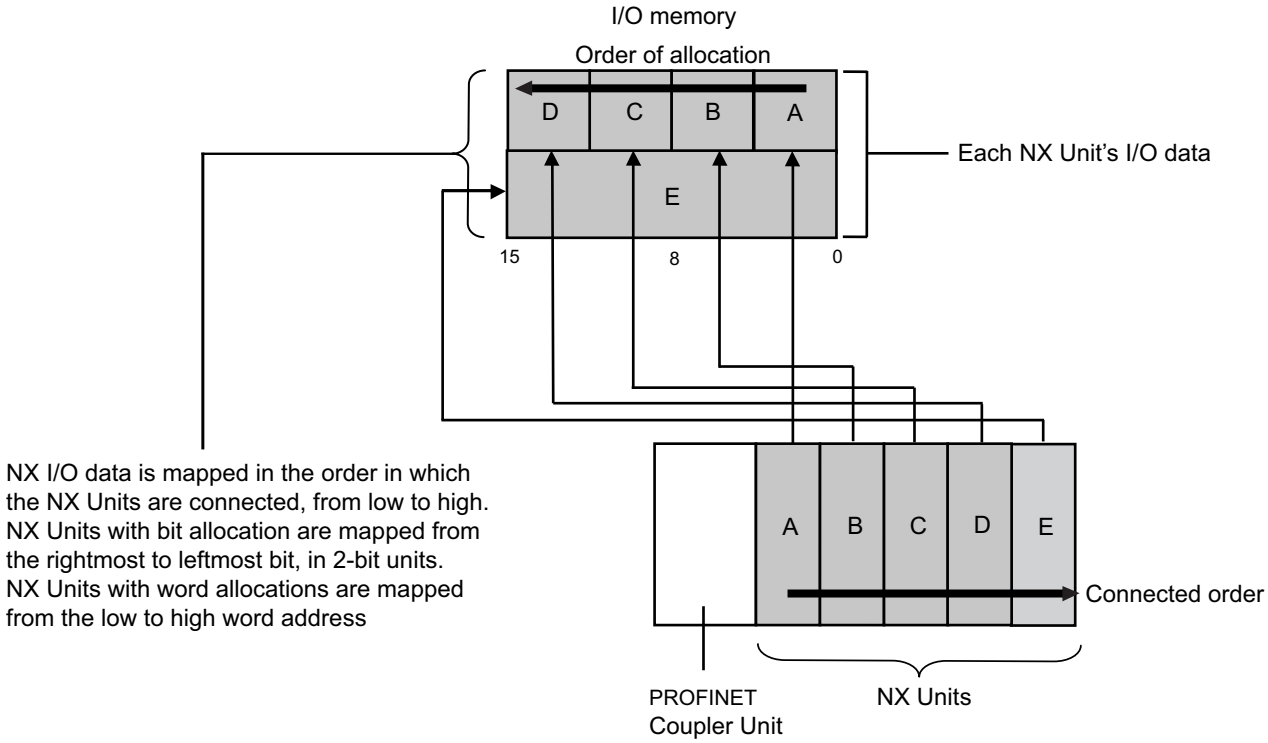


**Additional Information**

- One block of mapped output data and one block of mapped input data are maintained in the PROFINET Unit.
- Refer to *9-6 NX Unit IO Allocation* on page 9-27 for details about IO allocation and PROFINET Coupler Unit Status.
- Bit-sized NX Units (digital IO types, up to 8 points), e.g. NX-ID3317, NX-OC2633 are grouped together in words. They are mapped from the right-most bit to the left-most bit.
- Word-sized NX Units (analog IO types) and 8 points or higher Bit-sized NX Units, e.g. NX-AD2203, NX-DA203, NX-ID4342 (8 points Input), NX-OD5121 (16 points output) are mapped in word units, from the low to the high word address.
- The combined total size of mapped input data can be up to 512 bytes.
- The combined total size of mapped output data can be up to 512 bytes.

## IO Mapping Example

IO data is mapped to the PROFINET Coupler Unit's IO data blocks in the same order the NX Units are connected to the PROFINET Coupler Unit, regardless of the NX Units' models.

The example below shows the IO data mapping to the Input / Output blocks.

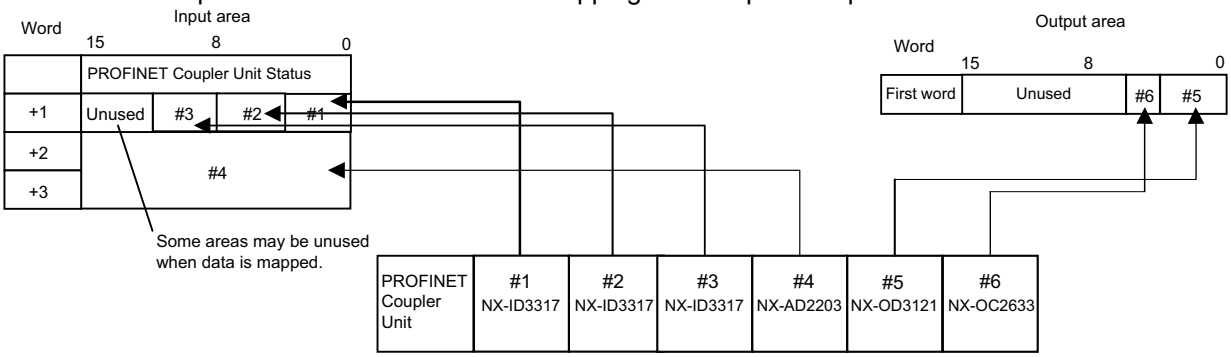


The following example shows the mapping of NX Output Units.

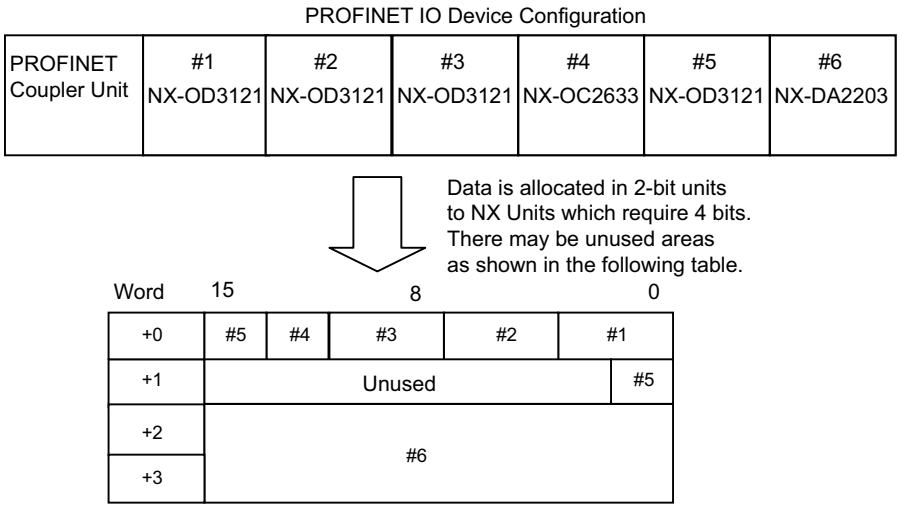


### Additional Information

- Refer to the appropriate NX-series User's Manual for more information on NX Unit data allocation sizes.
- Refer to *9-2 Setting IO Device Terminal Parameters* on page 9-5 for more information about status data configuration.

## 9-6-2 Sysmac Studio IO Allocation Functions

The Sysmac Studio provides a display of the IO allocation for the IO Device Terminal configuration. This display shows the bit offset and size of the data allocated for a specific configuration as well as other important information. Use this display to understand the mapping of IO data within the IO Device Terminal for accurate network variable assignment in the PLC.

In the **Multiview Explorer**, right-click the PROFINET Coupler and select ***Display IO Allocation*** from the menu.

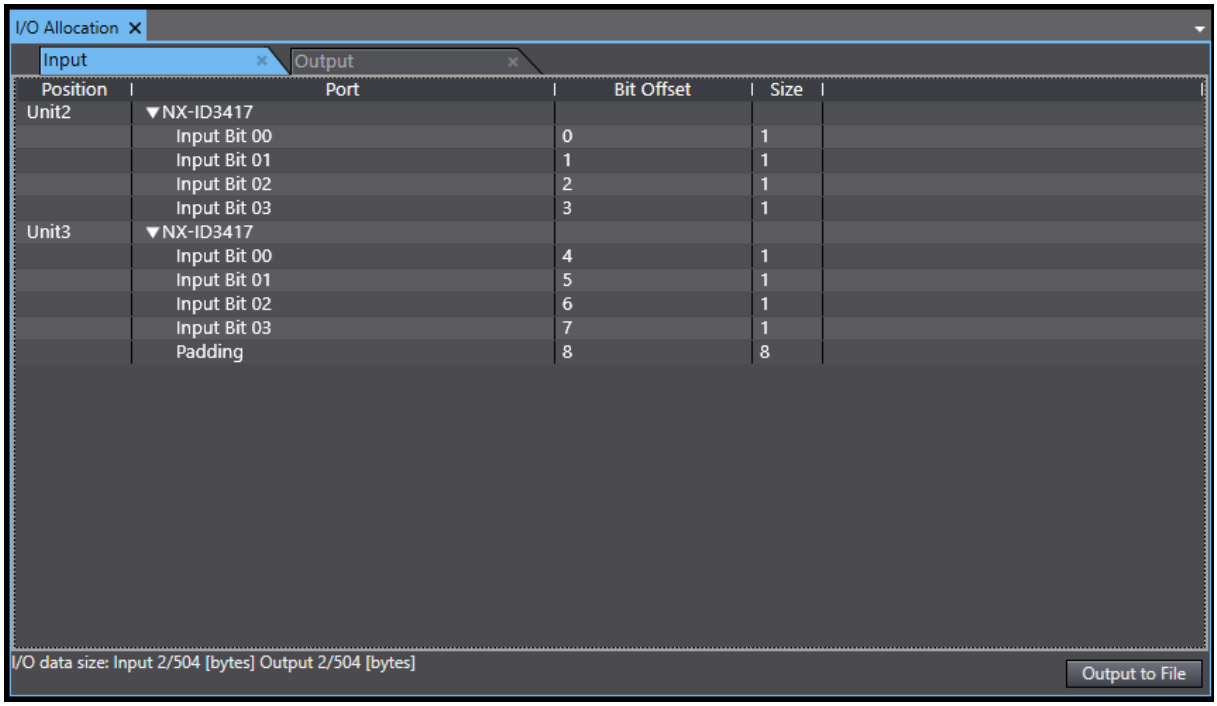

## IO Allocation Display

The IO allocation display area includes the following information.

| Item | Description |
|---|---|
| Input Tab | The overview of the input IO allocation. |
| Output Tab | The overview of the output IO allocation. |
| Position | The IO Device Terminal Unit mounting location with corresponding Unit number.<br>Refer to *9-6-1 Basic IO Mapping* on page 9-27 for more information. |
| Bit Offset | The consecutive order of bits assigned based on the size of each port accounting for any necessary padding (see below for padding details). |
| Size | Each item in the port area has a specific data size and this determines the bit offset and the data input/output total size. |
| IO Data Size | The summary of the input/output bytes required to accommodate all port items previously configured. |
| Output to File | Clicking Output to File will generate a zip file that includes an .xsl and .xml file.<br>Opening the .xml file in a browser will display a table overview of the IO allocation. |

## Padding

Padding is sometimes required in the IO allocation to fill remaining bits within an incomplete byte of data. This is done automatically to ensure whole bytes are used for data exchange.

## 9-6-3 Endian

The PROFINET Coupler Unit only supports little endian. It is recommended to select an IO Controller/PLC which supports function blocks to swap from little-endian to big-endian. Please refer to third party IO Controller Operation manual how to use the swap function blocks.

# 10



# I/O Refreshing

This section describes I/O refreshing for the PROFINET Coupler Unit.

**10-1 Introduction to I/O Refreshing for PROFINET IO Devices . . . . . 10-2**

**10-2 Communications Performance . . . . . 10-3**

10-2-1 I/O Response Time . . . . . 10-3

# 10-1 Introduction to I/O Refreshing for PROFINET IO Devices

This section introduces I/O refreshing for NX-series PROFINET IO Devices.

The PROFINET IO Controllers perform I/O refreshing cyclically with the NX Units in a PROFINET IO Device through PROFINET communications and the NX bus. The following four cycles affect the operation of I/O refreshing between the PROFINET IO Controllers and the NX Units in a PROFINET IO Device.

(A) Cycle Time in the PROFINET IO Controllers

(B) PROFINET communication period

(C) Refresh Cycle of the NX bus = 16 ms

(D) Refresh Cycle of each NX Unit

I/O refreshing operates asynchronously between the PROFINET IO Controllers and IO Devices.

The following figure shows the operation of I/O refreshing with a PROFINET IO Device.

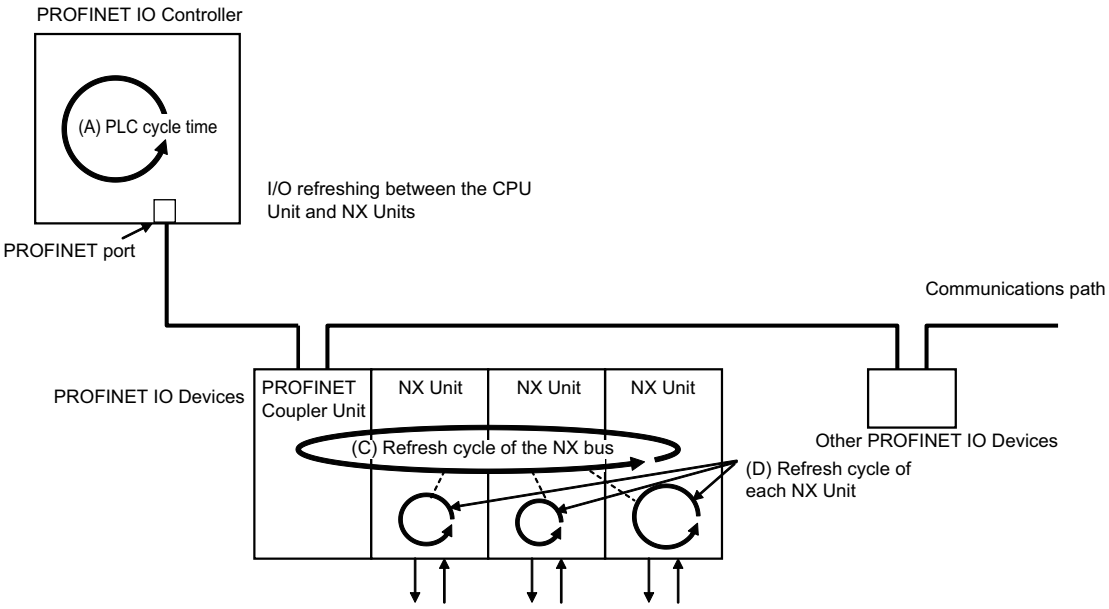

# 10-2 Communications Performance

This section describes the characteristics of PROFINET communications with PROFINET IO Devices connected to a PROFINET IO Controller. Use this section for reference when planning operations that require precise I/O timing.

The equations provided here are valid under the following conditions:

- All of the required PROFINET IO Devices are participating in communications.
- No errors are being indicated at the PROFINET Unit.
- Messages are not being produced in the network (from another company's configurator, for example).

## 10-2-1 I/O Response Time

The I/O response time is the time it takes from the reception of an input signal at an NX Unit to the output of the corresponding output signal at an NX Unit after being processed by the PLC's user program.

This section describes the characteristics of PROFINET communications with PROFINET IO Devices connected to a PROFINET IO Controller. Use this section for reference when planning operations that require precise I/O timing.

- The equations provided here are valid under the following conditions:
- All of the required PROFINET IO Devices are participating in communications.
- No errors are being indicated at the PROFINET Unit.
- Messages are not being produced in the network (from another company's configurator, for example).

**Precautions for Correct Use**

The values provided by these equations may not be accurate if another company's PROFINET Unit or Slave device is being used in the network.

## Minimum I/O Response Time

The minimum I/O response time ($T_{min}$) can be calculated with the following formula.

$T_{min} = T_{in} + T_{nxb_cycle} + T_{rt_in} + T_{plc} + T_{rt_out} + T_{nxb_cycle} + T_{out}$

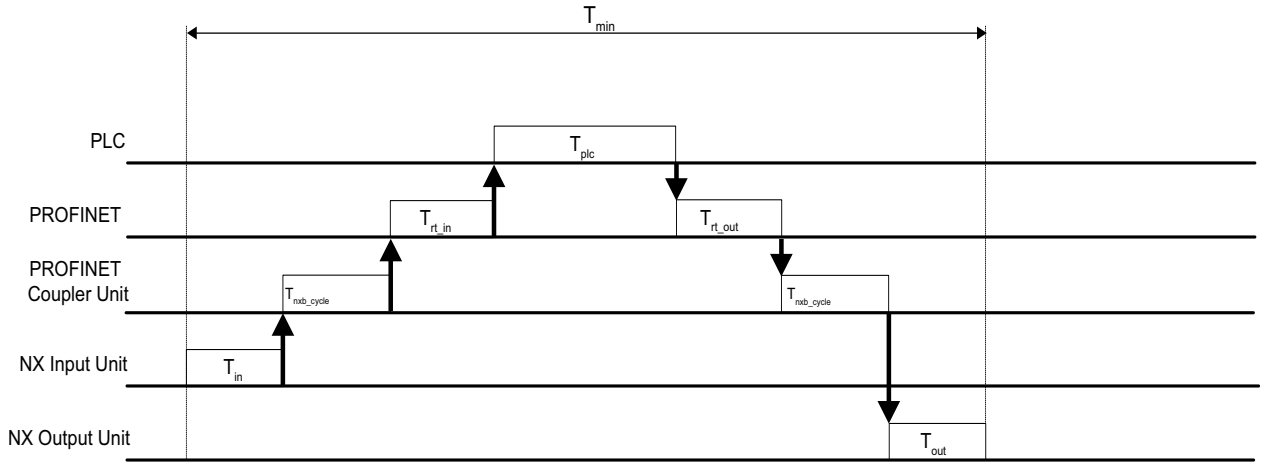


$T_{in}$: NX Input Unit switching response time

$T_{nxb_cycle}$: NX bus communication time

$T_{rt_in}$: PROFINET Coupler's communication time (input)

$T_{plc}$: PLC cycle time

$T_{rt_out}$: PROFINET Coupler's communication time (output)

$T_{nxb_cycle}$: NX bus communication time

$T_{out}$: NX Output Unit switching response time

## Maximum I/O Response Time

The maximum I/O response time ($T_{max}$) can be calculated with the following formula.

$T_{max} = T_{in} + (T_{nxb_cycle} \times 5) + (T_{rm} \times 4) + (T_{plc} \times 2) + T_{out}$

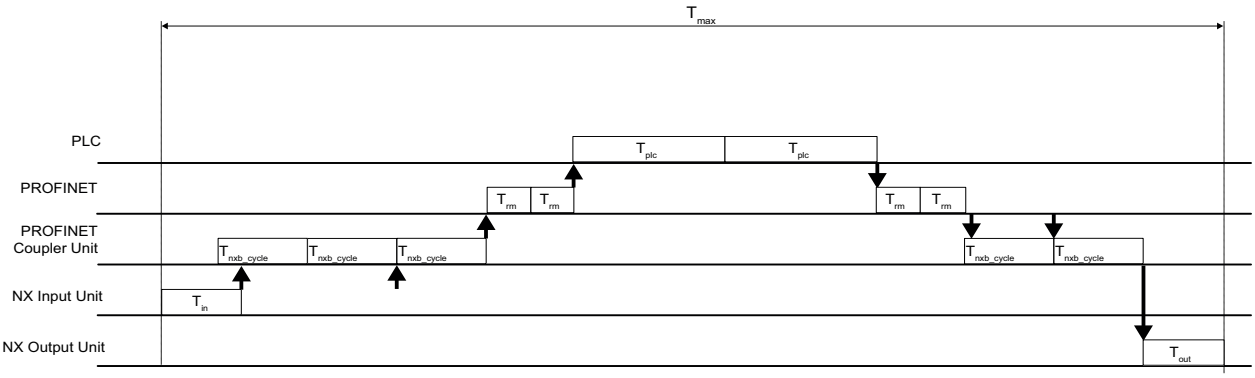


$T_{in}$: NX Input Unit switching response time

3 x $T_{nxb_cycle}$: NX bus communication time

2 x $T_{rm}$: PROFINET communication period

2 x $T_{plc}$: PLC cycle time

2 x $T_{rm}$: PROFINET communication period

2 x $T_{nxb_cycle}$: NX bus communication time

$T_{out}$: NX Output Unit switching response time

# 11

# PROFINET Coupler Unit Functions



This section describes the functions of the PROFINET Coupler Unit when it is used in a Profinet IO Device Terminal.


**11-1 Functions . . . . . 11-3**

**11-2 NX Unit Mounting Settings . . . . . 11-4**

11-2-1 Introduction . . . . . 11-4
11-2-2 Applications . . . . . 11-5
11-2-3 Operating Specifications for NX Units That Are Set as Unmounted Units . . . 11-5
11-2-4 Setting NX Units as Unmounted Units . . . . . 11-6

**11-3 Event Logs . . . . . 11-8**

11-3-1 Introduction . . . . . 11-8
11-3-2 Detailed Information on Event Logs . . . . . 11-9
11-3-3 Reading Event Logs . . . . . 11-11
11-3-4 Clearing Event Logs . . . . . 11-13
11-3-5 Exporting the Event Log . . . . . 11-15

**11-4 Clearing All Memory . . . . . 11-16**

11-4-1 Introduction . . . . . 11-16
11-4-2 Details on Clearing All Memory . . . . . 11-16
11-4-3 Procedure for Clearing All Memory . . . . . 11-18

**11-5 Restarting . . . . . 11-22**

11-5-1 Introduction . . . . . 11-22
11-5-2 Details on Restarting . . . . . 11-22
11-5-3 Procedure for Restarting . . . . . 11-23

**11-6 Changing Event Levels . . . . . 11-24**

11-6-1 Introduction . . . . . 11-24
11-6-2 Details on Changing Event Levels . . . . . 11-24
11-6-3 Procedure to Change an Event Level . . . . . 11-25

**11-7 Fail-soft Operation . . . . . 11-27**

11-7-1 Overview . . . . . 11-27
11-7-2 Application . . . . . 11-28
11-7-3 Details on Fail-soft Operation . . . . . 11-28

**11-8 Monitoring Total Power-ON Time . . . . . 11-30**
11-8-1 Overview . . . . . 11-30
11-8-2 Details on Monitoring Total Power-ON Times . . . . . 11-30
11-8-3 Checking Total Power-ON Times . . . . . 11-30
**11-9 Ethernet Switch Functions . . . . . 11-31**

# 11-1 Functions

The functions of the PROFINET Coupler Unit when it is used in a Profinet IO Device Terminal are listed below.

| Function | Overview | Reference |
|---|---|---|
| Setting the IO Device Terminal | This function is used to read and set the IO Device Terminal parameters from the Sysmac Studio. You can make settings offline, or go online and read and set the Unit configuration of the actual IO Device Terminal. | *Section 9 Setting Up the PROFINET Coupler Unit* |
| Cyclic IO Refreshing | The PROFINET Coupler Unit exchanges IO data with the mounted NX Units. | *Section 10 I/O Refreshing* |
| Free-Run Refreshing | With this IO refreshing method, the refresh cycle of the NX bus and the IO refresh cycles of the NX Units are asynchronous. | |
| NX Unit Mounting Settings | This function is used to register NX Units that are not connected to the actual configuration but will be added at a later time in the Unit configuration information as unmounted Units. If you use this function, you do not have to modify the user program after the NX Units are added. | *11-2 NX Unit Mounting Settings* on page 11-4 |
| Event Logs | This function records events, such as errors and status changes, that occur in the Profinet IO Device Terminal. | *11-3 Event Logs* on page 11-8 |
| Clear All Memory | This function initializes the entire Profinet IO Device Terminal or specified Units from the Sysmac Studio. | *11-4 Clearing All Memory* on page 11-16 |
| Restarting | This function allows you to apply changes to settings with the Sysmac Studio or through special instructions, without cycling the Unit power supply. | *11-5 Restarting* on page 11-22 |
| Changing Event Levels | This function allows you to change the level of errors that occur in the Profinet IO Device Terminal. | *11-6 Changing Event Levels* on page 11-24 |
| Resetting Errors | This function allows you to use the Sysmac Studio to reset errors that occur in the Profinet IO Device Terminal. | *12-4 Resetting Errors* on page 12-32 |
| Fail-soft Operation | This function allows the PROFINET Coupler Unit to start or continue IO refreshing only with the NX Units that can operate normally when an error occurs for the Profinet IO Device Terminal. | *11-7 Fail-soft Operation* on page 11-27 |
| Monitoring Total Power-ON Time | Each of the PROFINET Coupler Units and NX Units records the total time that the Unit power supply is ON to it and the total times can be displayed on the Sysmac Studio. | *11-8 Monitoring Total Power-ON Time* on page 11-30 |

# 11-2 NX Unit Mounting Settings

This section describes the NX Unit mounting function when the disabled setting is used.

## 11-2-1 Introduction

The disabled setting is used to register NX Units that are not connected to the actual configuration but will be added at a later time in the Unit configuration information as unmounted Units.

If you use this function, you do not have to modify the user program after the NX Units are added because of the following reasons.

- IO memory area is reserved for these unmounted NX Units in the same way that it is reserved for mounted NX Units.
- Unmounted NX Units are also assigned NX Unit numbers. This prevents the NX Unit numbers of other NX Units in the same IO Device Terminal from changing when you change the setting of an NX Unit from unmounted to mounted.

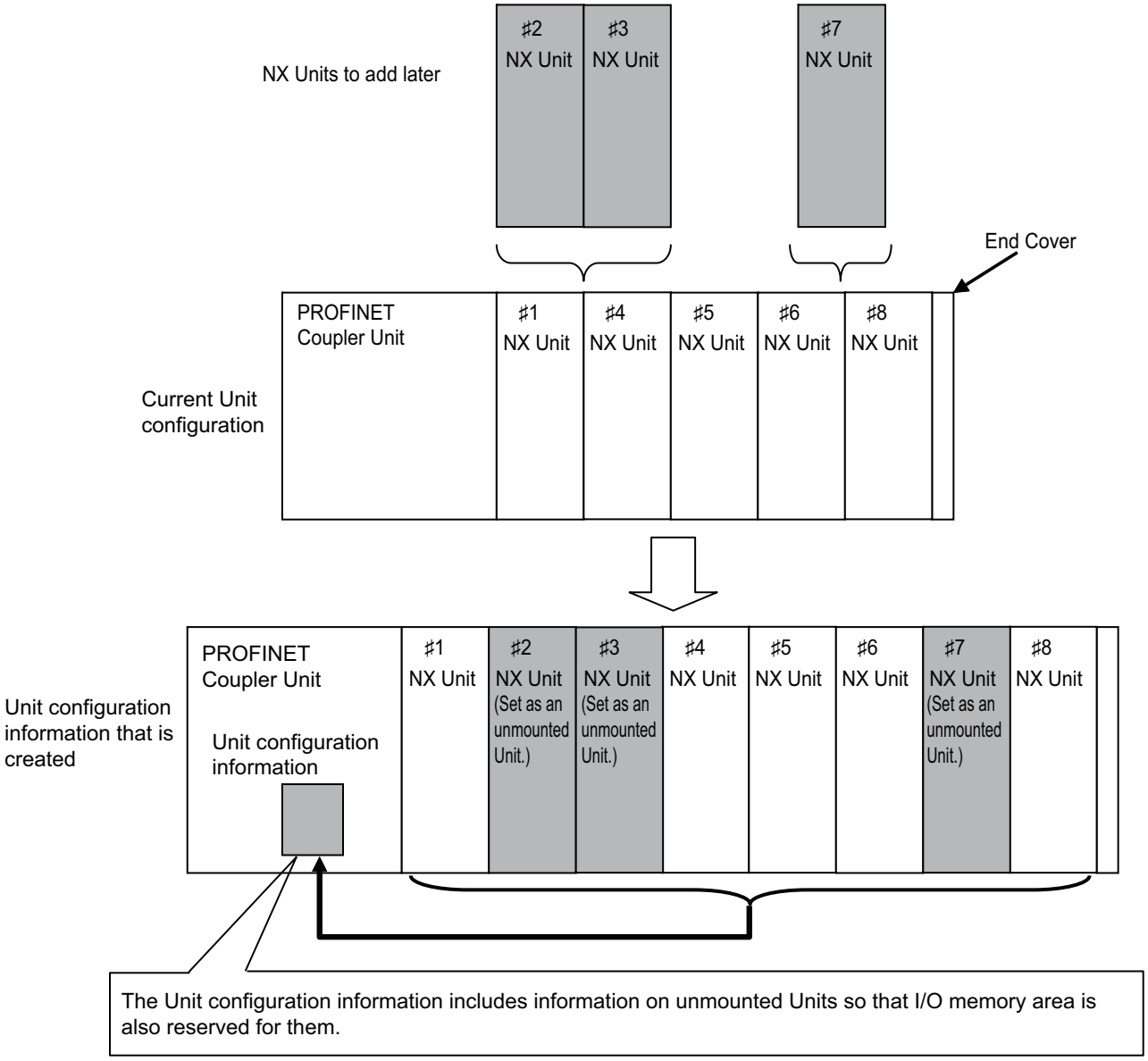

## 11-2-2 Applications

For example, if you use this function in the following cases, you do not have to modify the user program.

- When you plan to add Units in the future
- When a specific Unit is temporarily unavailable, such as when commissioning the system
- When the number of NX Units depends on the type of equipment

## 11-2-3 Operating Specifications for NX Units That Are Set as Unmounted Units

The operating specifications for NX Units that are set as unmounted Units are given in the following table.

| Item | Operation |
|---|---|
| Bandwidth reservation for IO refresh data with the PROFINET IO Controller | Bandwidth is reserved. |
| IO refreshing with the PROFINET IO Controller | The IO is not refreshed. |
| Detection of events | Events are not detected. |
| Assignment of NX Unit numbers to NX Units | Unit numbers are not assigned because the Units do not exist. |
| Message communications | Not possible because the Units do not exist. |
| Transfers for the synchronization function of the Sysmac Studio | Not applicable. |
| Transfer of the Unit operation settings | Not applicable. |
| Sysmac Studio Controller backup function | Not applicable. |
| SD Memory Card backup function | Not applicable. |
| Instructions | Parameters cannot be read or written. An instruction error will occur. |
| Clearing all memory | Not applicable. |
| Reading/writing IO Device Terminal setting information through backup/restore operations | Not applicable. |
| Reading event logs | Not applicable. |
| Notification of status information | Not applicable. |

NX Units that are set as unmounted Units are included in the calculations for total power consumption and total Unit width when the Unit configuration is created on the Sysmac Studio.

**Precautions for Safe Use**

Check the user program, data, and parameter settings for proper execution before you use them for actual operation.

**Precautions for Correct Use**

When you mount an NX Unit that was set as an unmounted Unit, a Unit Configuration Verification Error will occur.

## 11-2-4 Setting NX Units as Unmounted Units

You use the Sysmac Studio to set NX Units as unmounted Units. The operations are described by using the Sysmac Studio as an example. For Support Software other than the Sysmac Studio, refer to the operation manual for the Support Software that you are using. After you change the settings for any NX Units, always transfer the Unit configuration information to the Profinet IO Device Terminal.

**1** Select the NX Units to set as unmounted Units from those that are registered to the PROFINET Coupler Unit on the Edit IO Device Terminal Configuration Tab Page.

The Unit Settings Pane is displayed.

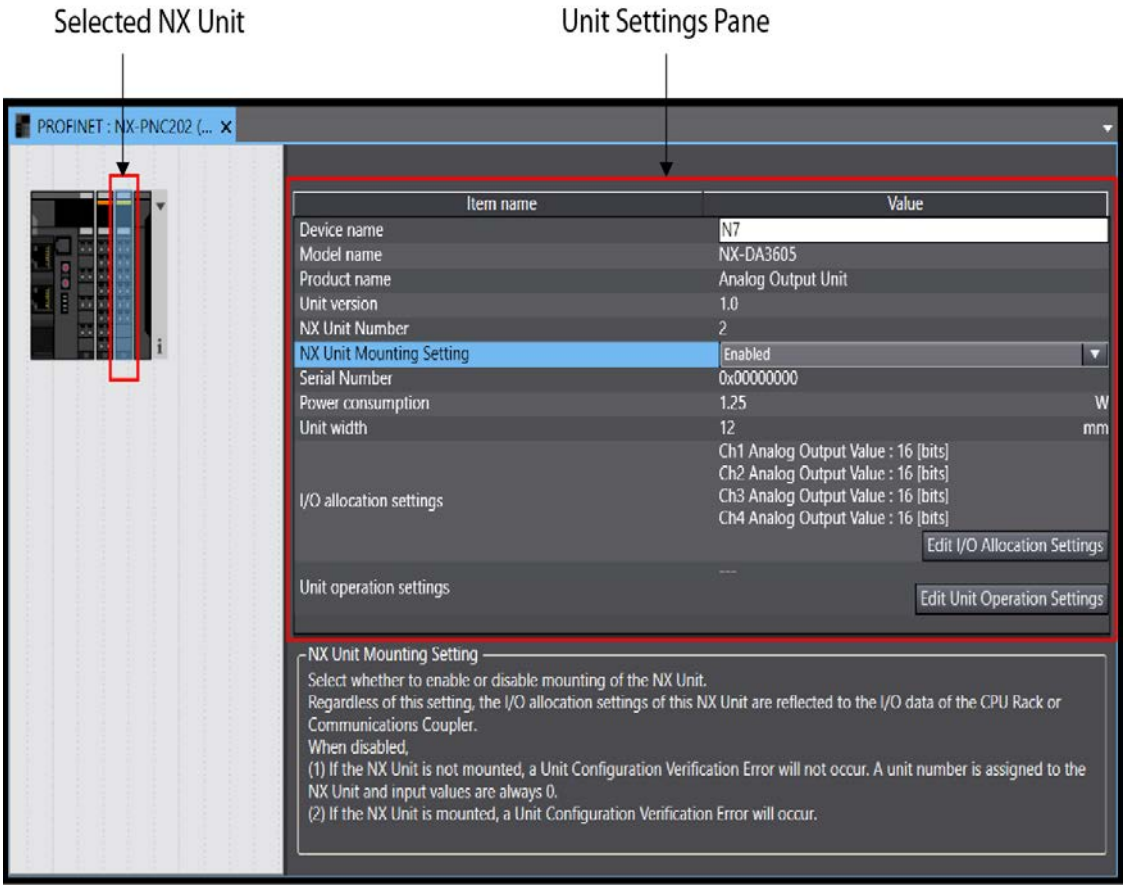

**2** In the *Unit Setting* pane, set the *NX Unit Mounting Setting to Disabled*.

The selected NX Unit is set as an unmounted Unit.

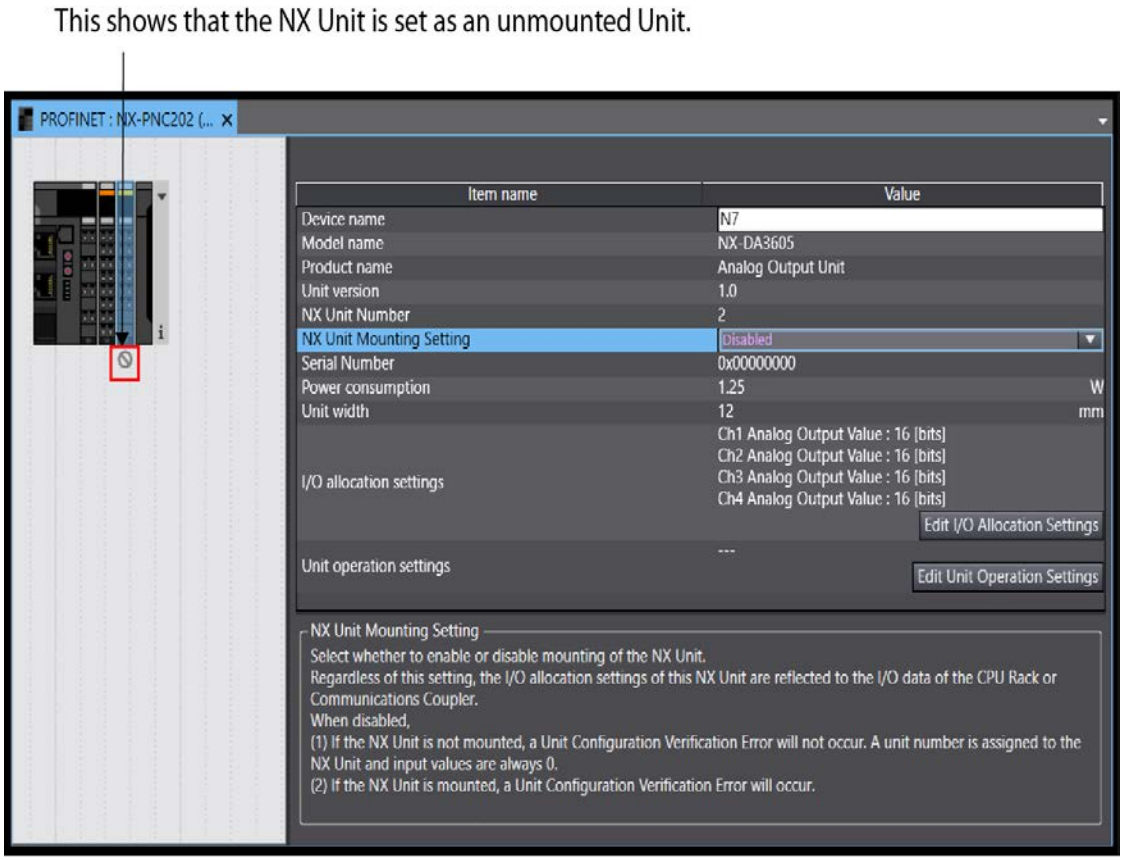


To change an NX Unit that is set as an unmounted Unit to a mounted NX Unit, set the *NX Unit Mounting Setting* to *Enabled* in step 2.

# 11-3 Event Logs

The Profinet IO Device Terminal supports the event logs to perform troubleshooting.

This section describes event logging for PROFINET Coupler Unit.

## 11-3-1 Introduction

The Profinet IO Device Terminal records events, such as errors and status changes, that occur in the Profinet IO Device Terminal. You can use the Sysmac Studio to check the meaning of the events in the PROFINET Coupler Unit.

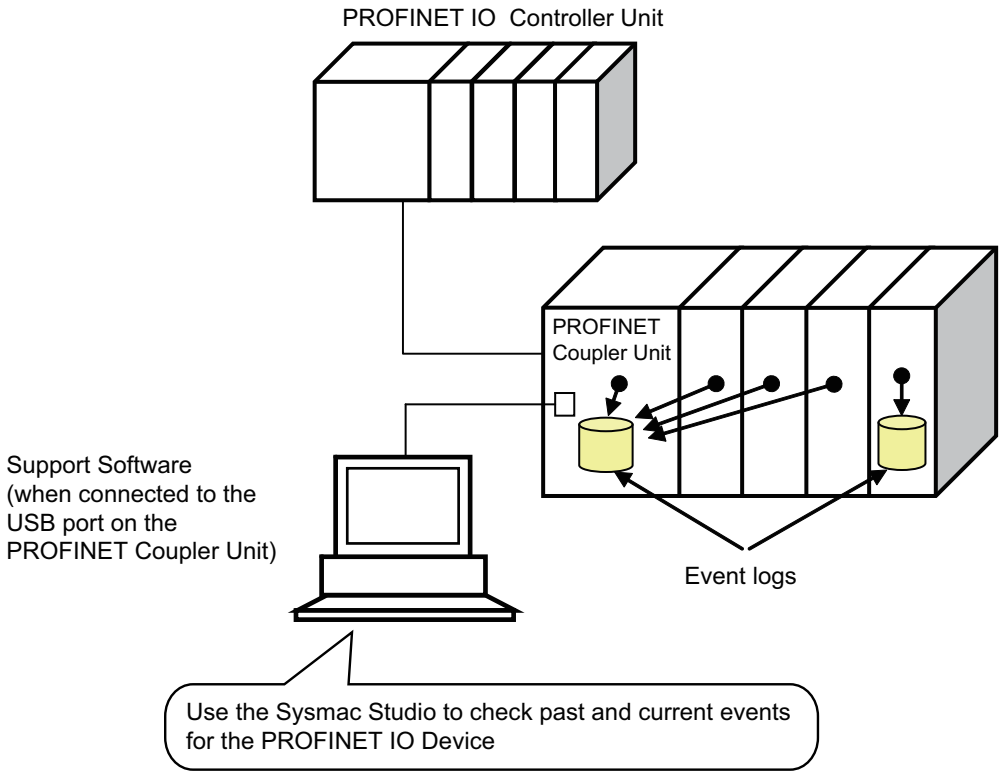


"Event" for a Profinet IO Device Terminal is a generic term for an unexpected error or for information that does not indicate an error but for which the user must be notified.

### Features

Event logging in the Profinet IO Device Terminal offer following benefits:

- In addition to error logs, various logs are recorded, such as execution of restarting.

### Displaying Event Logs

You can use the troubleshooting functions on the Sysmac Studio to check current and past events in a Profinet IO Device Terminal.

## 11-3-2 Detailed Information on Event Logs

This section describes the event logs in detail.

### Where Events Are Stored

Events that occur in the Profinet IO Device Terminal are stored as described below.

| Unit where event occurred | Where events are stored |
|---|---|
| PROFINET Coupler Unit | In the PROFINET Coupler Unit |
| NX Units | In the PROFINET Coupler Unit or in the NX Unit<br>Refer to the manual for the specific Unit for the location where events are stored. |

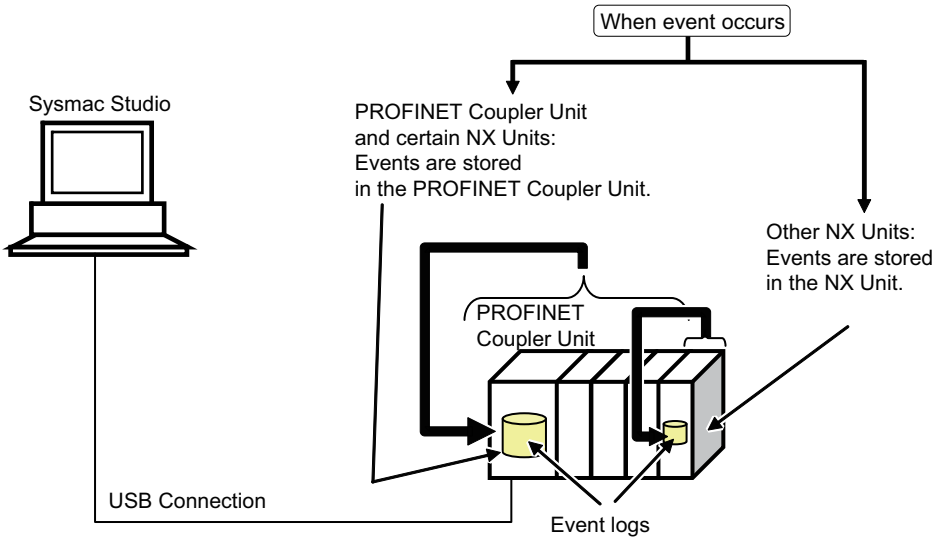


### Event Sources

The sources of events that occur in the Profinet IO Device Terminal are listed below.

| Item | Description |
|---|---|
| Event source | PROFINET IO Controller Function Module |
| Source details | PROFINET node address, slot position, NX Unit number, and model number |

### Event Log Categories

This information gives the category of the event log.

You view each of these logs separately on the Sysmac Studio.

| Event type | Event log category | Description |
|---|---|---|
| Controller event | System log | This is a log of the events that are detected by each Unit. |
| | Access log | This is a log of the events that affect the IO Device Terminal operation due to user actions. |

## Number of Records

Each event log can contain the following number of records. If the number of events exceeds this number, the oldest events are overwritten.

| Event log category | Unit type | | |
|---|---|---|---|
| | PROFINET Coupler Unit | NX Unit | |
| | | Units that store events in the PROFINET Coupler Unit | Units that store their own events |
| System event log | Total: 128 events | | Check the specifications in the manual for each Unit. |
| Access event log | Total: 32 events | | |

## Retaining Event Logs during Power Interruptions

The Profinet IO Device Terminal retains event logs even if the Unit power supply is interrupted.

## Event Codes

Event codes are pre-assigned to the events based on the type of event. Event codes are displayed as 8-digit hexadecimal numbers.

Refer to *12-3-4 Event Codes for Errors and Troubleshooting Procedures* on page 12-11 for details on event codes and error meanings.

**Additional Information**

When the power supply is turned ON, the PROFINET Coupler Unit resets any current errors and detects errors again. Therefore, the same error may be recorded more than once in the event log of the Profinet IO Device Terminal. This applies to the following errors.

- Errors that occurred before the power supply to the Profinet IO Device Terminal was cycled for which the causes of the errors remain.
- Errors that occur after the power supply to the Profinet IO Device is turned ON but before it moves to the Pre-Operational state.

## Event Levels

Each event has an event level.

Events are classified into the following five levels according to the level of impact the events have on control.

| No. | Event level | Classification |
|---|---|---|
| 1 | High | Major fault |
| 2 | ↕ | Partial fault level |
| 3 | | Minor fault level |
| 4 | | Observation level |
| 5 | Low | Information level |

Errors with a higher level have a greater affect on the functions that the complete system provides, and it is more urgent to recover from them. These classifications are displayed on the Sysmac Studio when an error occurs.

You can change the level assigned to some events. Refer to *11-6 Changing Event Levels* on page 11-24.

## 11-3-3 Reading Event Logs

Use the following procedure to read the event log. The operations are described by using the Sysmac Studio as an example. For Support Software other than the Sysmac Studio, refer to the operation manual for the Support Software that you are using.

**1** Select ***Troubleshooting*** from the Tools Menu while online. You can also click the **Troubleshooting** button in the toolbar.

The following Troubleshooting Dialog Box is displayed.

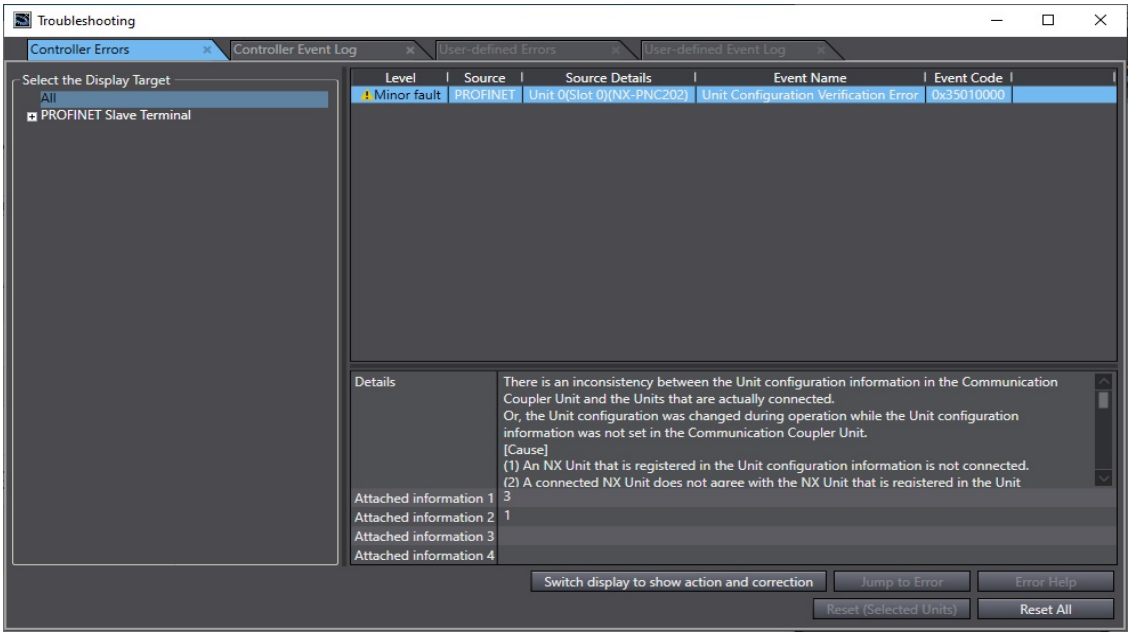


**2** Click the **Controller Event Log** Tab.

The event log for the PROFINET Coupler Unit is displayed.

Click the **Update** button to display the latest event log.

If an event is for an IO Device Terminal, the node number of the IO Device Terminal and the NX Unit number are displayed as the source details.

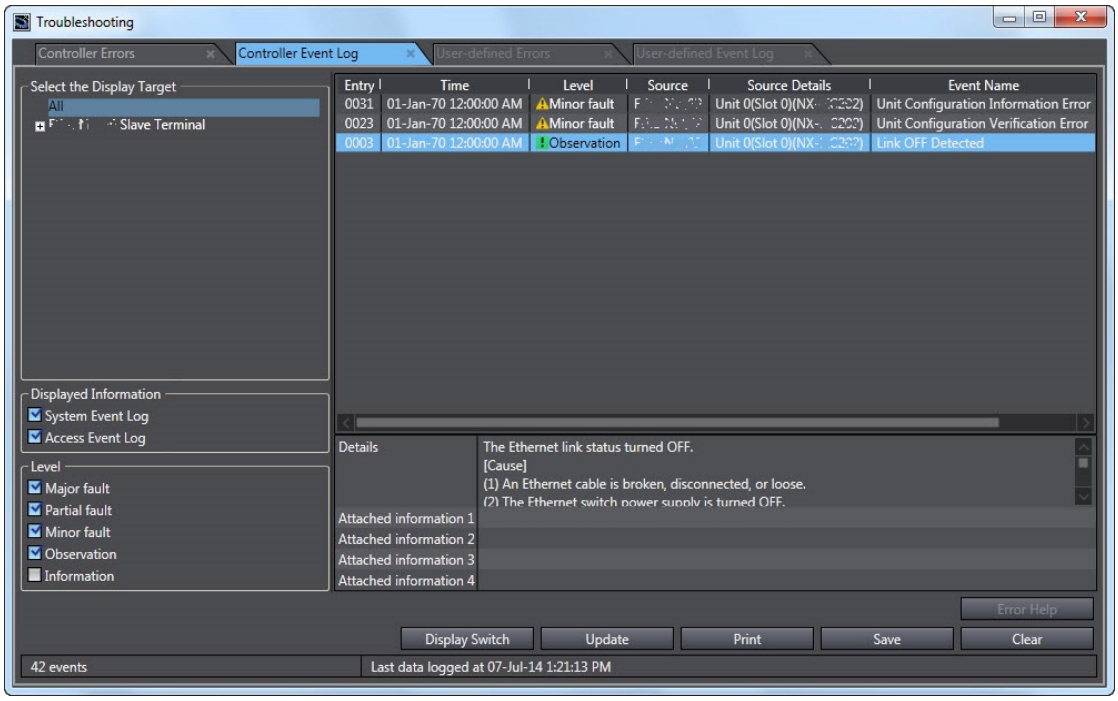


### Additional Information

- The NX Unit numbers that are displayed as the source in the event log are the NX Unit numbers in the current Unit configuration. They are not necessarily the NX Unit numbers at the time that the event occurred.
- You can check the NX Unit event log that is stored in the PROFINET Coupler Unit for NX Units that are no longer mounted under the PROFINET Coupler Unit. To check them, select everything or select the Profinet IO Device Terminal in the Select the Display Target from the Controller Event Log Tab Page. The event log display will also include NX Units that were previously mounted to the PROFINET Coupler Unit. For these NX Units, the NX Unit number is the number when the error occurred.
  To display the event log for only the currently mounted NX Units, select the NX Units in the Select the Display Target.
- If the most recent version of the Sysmac Studio is not used, the Sysmac Studio may not support some events. The event code and attached information are displayed correctly.
  Use the most recent version of the Sysmac Studio to check events.

## 11-3-4 Clearing Event Logs

You can clear the event logs in the Profinet IO Device Terminal. This section describes how to clear the event logs.

### Specifying the Scope of Event Logs to Clear

You can specify whether to clear events from the entire Profinet IO Device Terminal, the PROFINET Coupler Unit, or the NX Units.

| Sysmac Studio connection | Unit to clear log from | |
|---|---|---|
| | Clearing event logs in the entire Profinet IO Device Terminal at once | Clearing events for specific Units |
| Peripheral USB port on PROFINET Coupler Unit | • Profinet IO Device Terminal | • PROFINET Coupler Unit<br>• NX Units |

### Procedure for Clearing Event Logs

From the Controller Event Log Tab Page, you can clear the events for an entire IO Device Terminal or the events for a specified PROFINET Coupler Unit or NX Unit. The operations are described by using the Sysmac Studio as an example. For Support Software other than the Sysmac Studio, refer to the operation manual for the Support Software that you are using.

**1** Select ***Troubleshooting*** from the Tools Menu while online. You can also click the **Troubleshooting** button in the toolbar.

The following Troubleshooting Dialog Box is displayed.

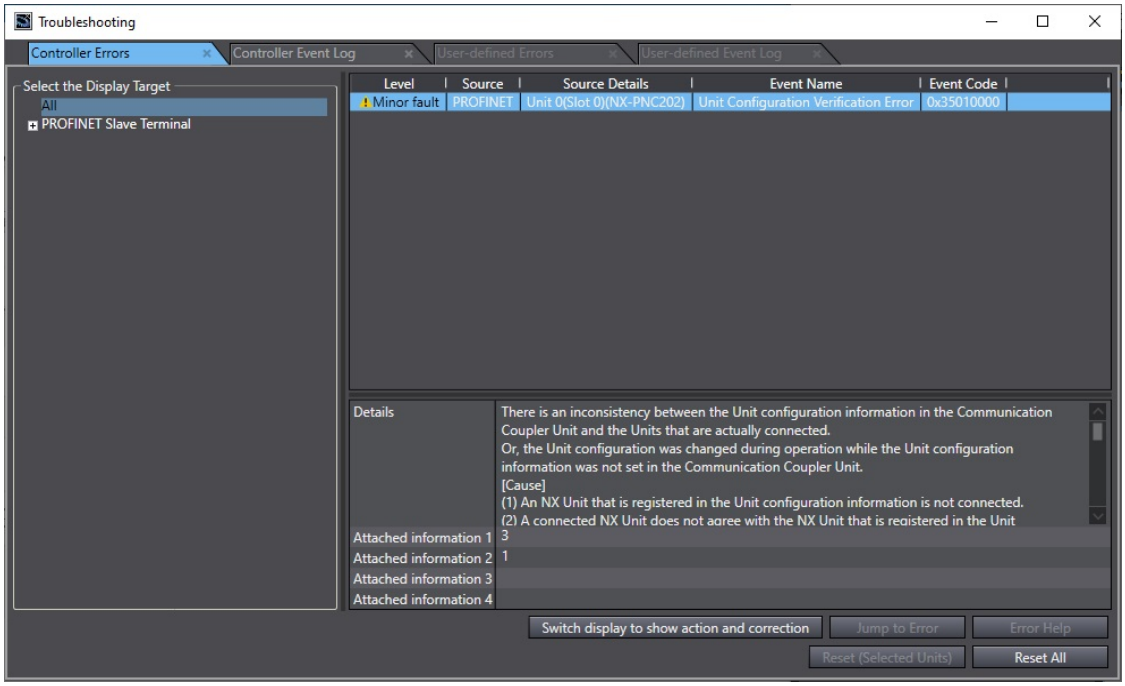

**2** In the Select the Display Target Area of the Controller Event Log Tab Page, select the Units to clear and click the **Clear** button.

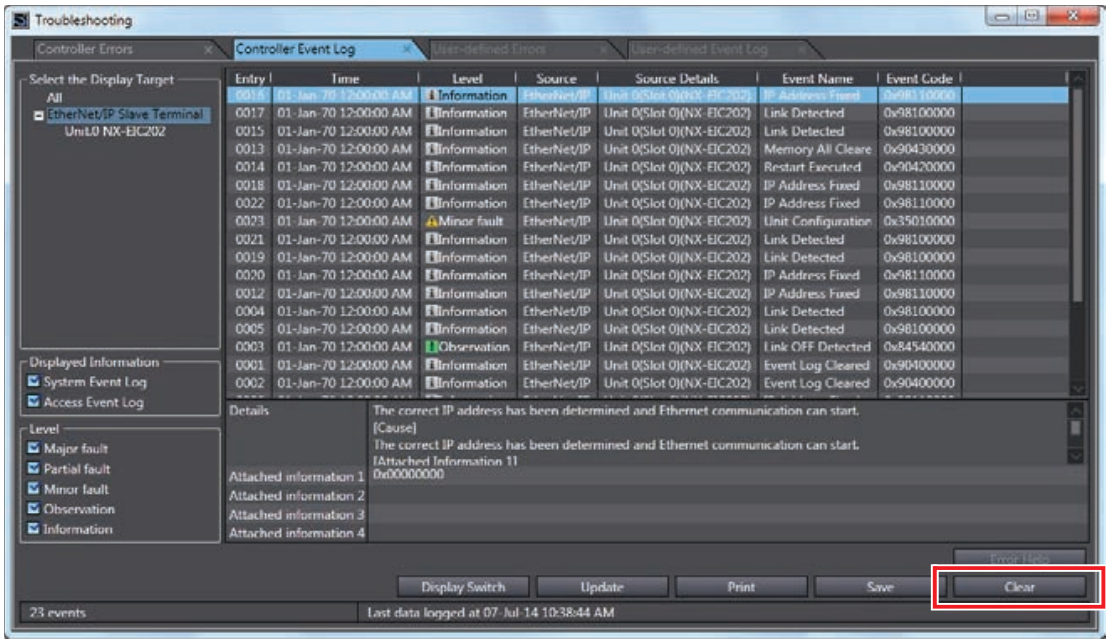


A confirmation dialog box is displayed.

**3** Click the **Yes** button.

The selected events are cleared.

## 11-3-5 Exporting the Event Log

You can export the contents of the event log to a CSV file.

The event log for the PROFINET Coupler Unit and NX Units is displayed as part of the Controller event log. Use the Support Software. The operations are described by using the Sysmac Studio as an example. For Support Software other than the Sysmac Studio, refer to the operation manual for the Support Software that you are using.

**1** Select ***Troubleshooting*** from the Tools Menu while online. You can also click the **Troubleshooting** button in the toolbar.

The following Troubleshooting Dialog Box is displayed.

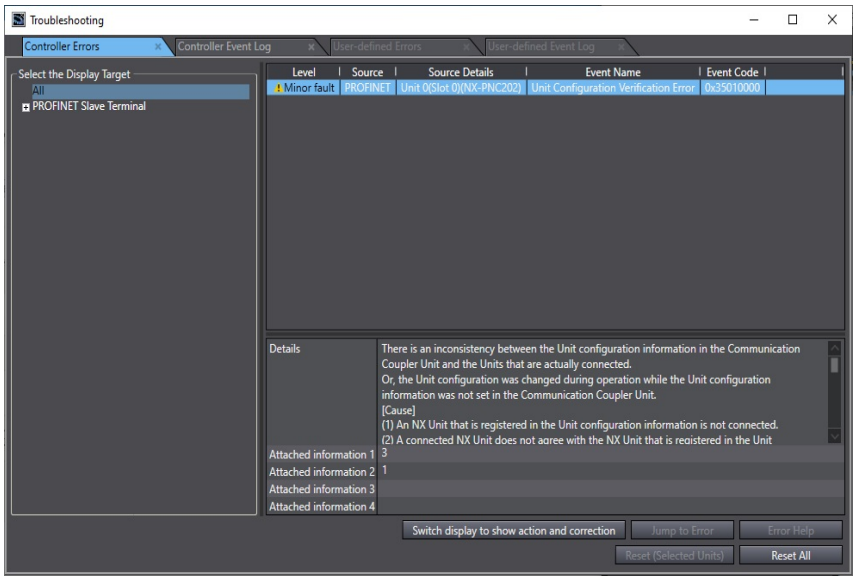


**2** In the Select the Display Target Area of the Controller Event Log Tab Page, select the Unit for which to export the events and click the **Save** button.

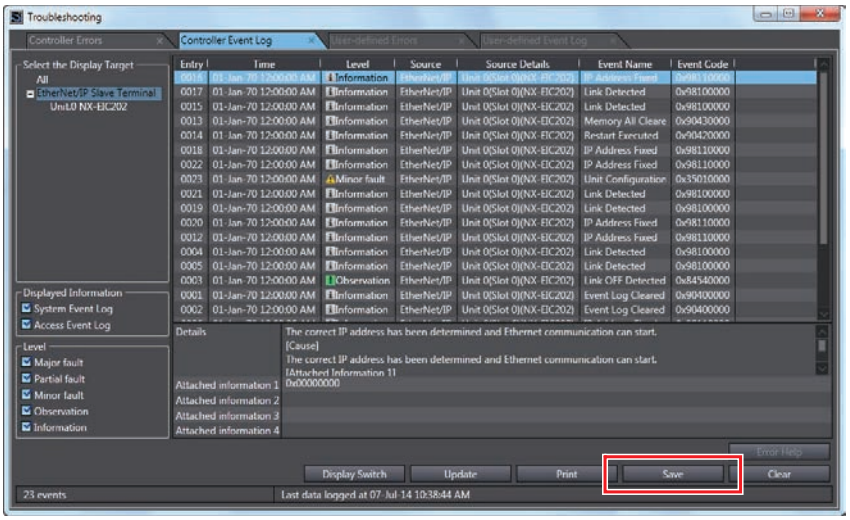


The Save Dialog Box is displayed.

**3** Input the file name, and then click the **Save** button.

The Controller event logs are saved in CSV format.

# 11-4 Clearing All Memory

This section describes how to clear all memory in the PROFINET Coupler Unit.

## 11-4-1 Introduction

The clear all memory function of the Sysmac Studio initializes various setting information in the Profinet IO Device Terminal to the default settings, such as the Unit configuration information and the IO allocation information.

You can use this function on the Sysmac Studio to initialize various setting information.

## 11-4-2 Details on Clearing All Memory

### Specifying the Scope of Memory to Clear

You can specify the scope of the memory to clear from the following.

- PROFINET Coupler and NX Units
- PROFINET Coupler Unit only
- NX Units only
- Event Logs

**Additional Information**

- Use the Sysmac Studio to clear the parameters of the connected NX Units.
- The Sysmac Studio can not clear all PROFINET parameters. Use the Network Configurator to clear all PROFINET related parameters.

### Scope of Data to Clear and State of Memory After it is Cleared

The function clears the following data in the Profinet IO Device Terminal.

| Data | Status after Clear All Memory operation for each specification | | |
|---|---|---|---|
| | Entire Profinet IO Device Terminal | PROFINET Coupler Unit | NX Unit |
| Unit configuration information | This data is set to the default settings.<br>If you turn ON the Unit power supply immediately after the Clear All Memory operation is completed, the IO Device Terminal starts based on the actual Unit configuration information. | The data is not cleared. | The data is not cleared. |
| IO allocation information | This data is set to the default settings. | The data is not cleared. | The data is not cleared. |
| Unit operation settings | This data is set to the default settings. | This data is set to the default settings. | This data is set to the default settings. |

| Data | Status after Clear All Memory operation for each specification | | |
|---|---|---|---|
| | Entire Profinet IO Device Terminal | PROFINET Coupler Unit | NX Unit |
| Unit application data | Refer to the manual for each NX Unit for the operating specifications when the Clear All Memory operation is used on NX Units that have Unit application data. | --- | Refer to the manual for each NX Unit for the operating specifications when the Clear All Memory operation is used on NX Units that have Unit application data. |
| Event logs | Event logs are cleared if you select the *Clear event log* Option when you execute the Clear All Memory operation. | Event logs are cleared if you select the *Clear event log* Option when you execute the Clear All Memory operation. | Event logs are cleared if you select the *Clear event log* Option when you execute the Clear All Memory operation. |

**Additional Information**

- IP address information is not altered when memory is cleared. Use the Network Configurator to clear all PROFINET related parameters.
- With the option “Reset to Factory - Mode 2 Reset communication parameters” the device name and IP address are reset to their default values.

## Restarting After Clear All Memory Operation

Restarting is automatically performed after the Clear All Memory operation.

The following table gives the target of the Clear All Memory operation and the type of restart that is performed after the Clear All Memory operation.

| Target of Clear All Memory operation | Type of restart |
|---|---|
| Entire Profinet IO Device Terminal | Restarting the IO Device Terminal. |
| PROFINET Coupler Unit | Restarting the IO Device Terminal. |
| NX Unit | Restarting the IO Device Terminal or the NX Unit.*1 |

*1. The function to restart individual NX Units was added for a version upgrade.
The NX Unit is restarted if the unit versions of the NX Unit support restarting individual NX Units.
The IO Device Terminal is restarted if the unit version of the NX Unit does not support restarting individual NX Units.

## 11-4-3 Procedure for Clearing All Memory

This section provides the procedure for the Clear All Memory operation. The operations are described by using the Sysmac Studio as an example. For Support Software other than the Sysmac Studio, refer to the operation manual for the Support Software that you are using.

### Clearing All Memory for PROFINET Coupler Unit

**1** Go online, right-click the PROFINET Coupler Unit in the Edit IO Device Terminal Configuration Tab Page, and select ***Clear All Memory***.

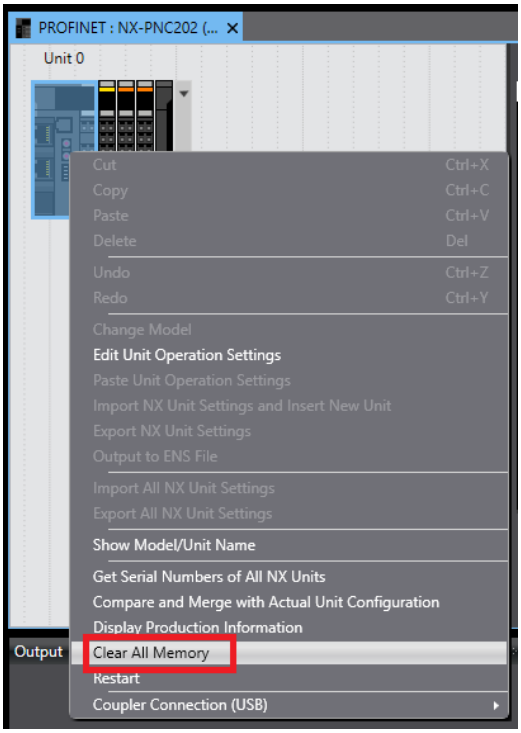


A Clear All Memory Dialog Box is displayed.

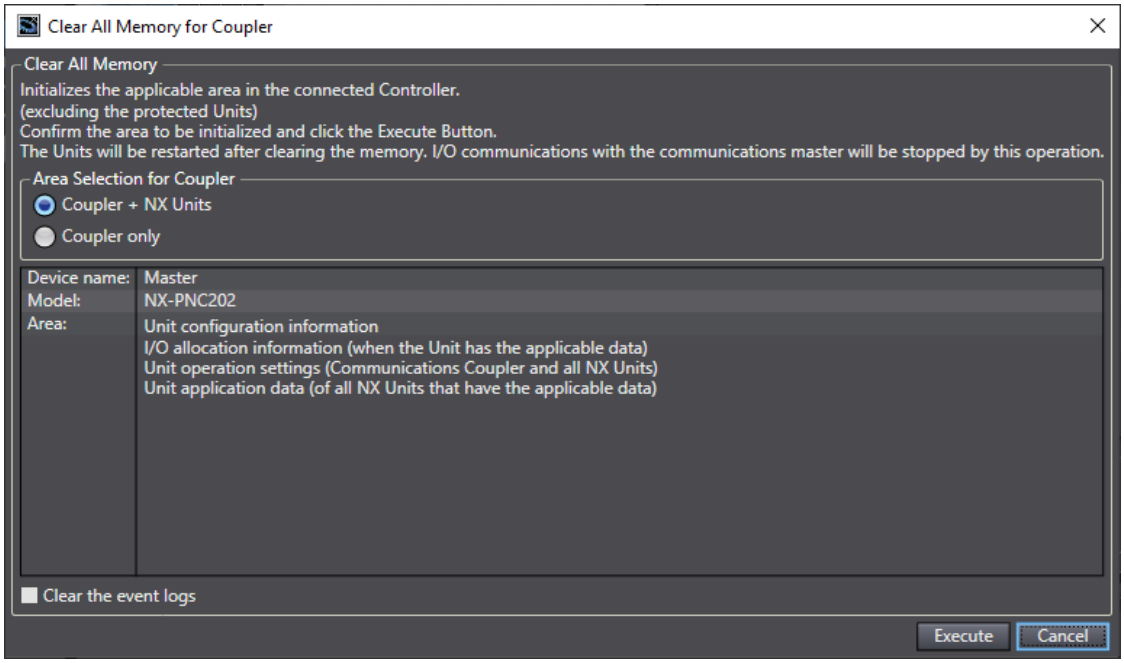

**2** Make an area selection for coupler and click ***Execute***.

An execution confirmation dialog box is displayed.

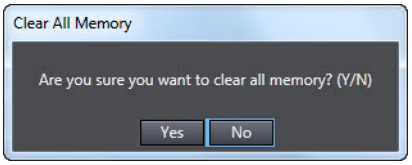


**3** Click the **Yes** button.

After the memory is cleared, an automatic restart occurs and the memory all cleared dialog box is displayed.

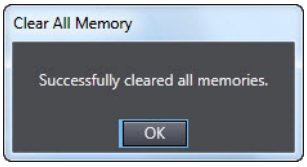

## Clearing All Memory for NX Unit

**1** Go online, right-click the NX Unit in the Edit IO Device Terminal Configuration Tab Page, and select ***Clear All Memory***.

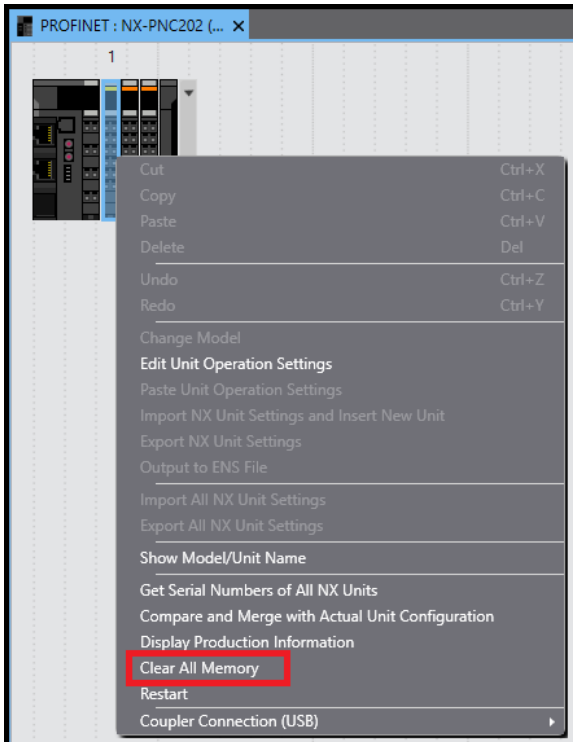


A Clear All Memory Dialog Box is displayed.

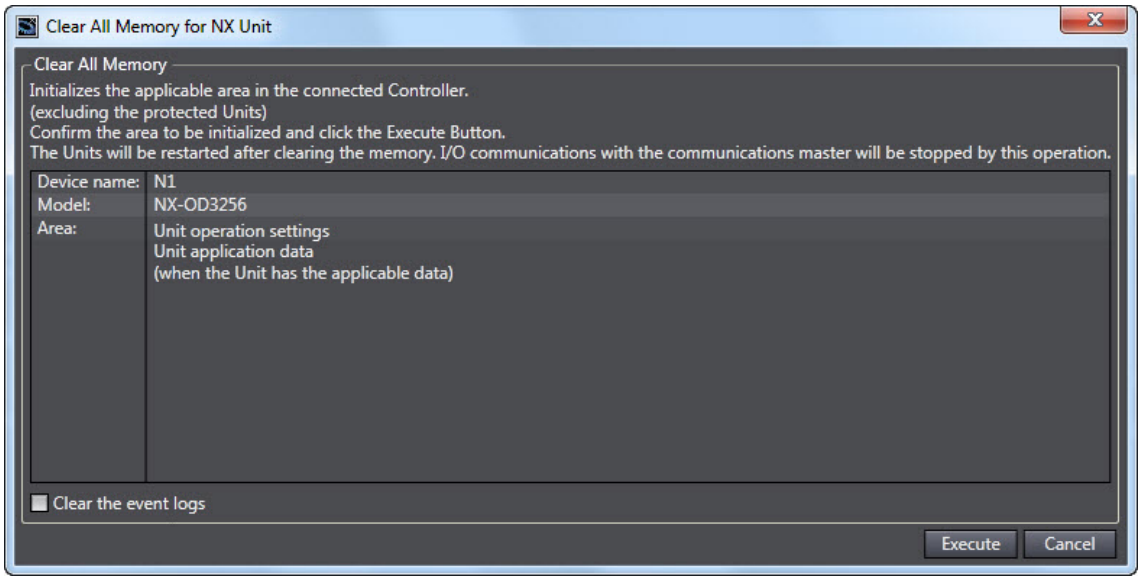

**2** Make an area selection for coupler and click ***Execute***.

An execution confirmation dialog box is displayed.

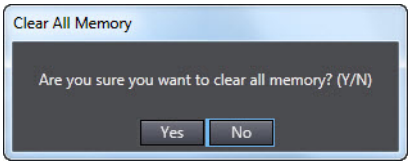


**3** Click the **Yes** button.

After the memory is cleared, an automatic restart occurs and the memory all cleared dialog box is displayed.

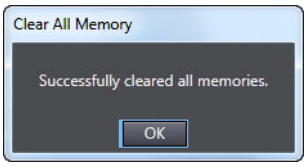

# 11-5 Restarting

This section describes restarting a Profinet IO Device Terminal.

## 11-5-1 Introduction

The restart function is used to apply changes to settings with the Sysmac Studio or by executing instructions without cycling the Unit power supply to the Profinet IO Device Terminal.

## 11-5-2 Details on Restarting

This section describes the types of restarts: Restarting the IO Device Terminal and restarting individual NX Units.

### Types of Restarts

The following table provides functions for the types of restarts.

| Type | Function |
|---|---|
| Restarting IO Device Terminal | The PROFINET Coupler Unit and all NX Units mounted to the IO Device Terminal are restarted. |
| Restarting individual NX Units | The specified NX Unit is restarted. |

### Restarting the Coupler Unit

The PROFINET Coupler Unit and all NX Units mounted to the IO Device Terminal are restarted.

Use the Sysmac Studio to restart the IO Device Terminal. Select the PROFINET Coupler Unit of the IO Device Terminal to restart and then execute the restart.

**Precautions for Correct Use**

- The PROFINET IO Controller may detect an error when the IO Device Terminal is restarted after a restart operation is performed with a direct USB connection between the Sysmac Studio and PROFINET Coupler Unit. If an error is detected, you need to reset the error in the PROFINET IO Controller.
- When the IO Device Terminal is restarted, all of the Units on the IO Device Terminal perform the same operation as when the power supply is cycled. Refer to the manuals for the specific Units for the operation that is performed when the power supply is turned ON.

### Restarting Individual NX Units

One specified NX Unit is restarted. The PROFINET Coupler Unit and all NX Units that were not specified for restarting continue to operate.

Use the Sysmac Studio to restart the NX Unit. Select the NX Unit of the IO Device Terminal to restart and then execute the restart.

## 11-5-3 Procedure for Restarting

The Sysmac Studio is used as an example to describe the operation to restart a Unit with Support Software. For Support Software other than the Sysmac Studio, refer to the operation manual for the Support Software that you are using.

### Restarting the IO Device Terminal

Use the following procedure to restart all of the Units in the IO Device Terminal.

**1** Go online, right-click the PROFINET Coupler Unit in the Edit IO Device Terminal Configuration Tab Page, and select ***Restart***.

A Restart Confirmation Dialog Box is displayed.

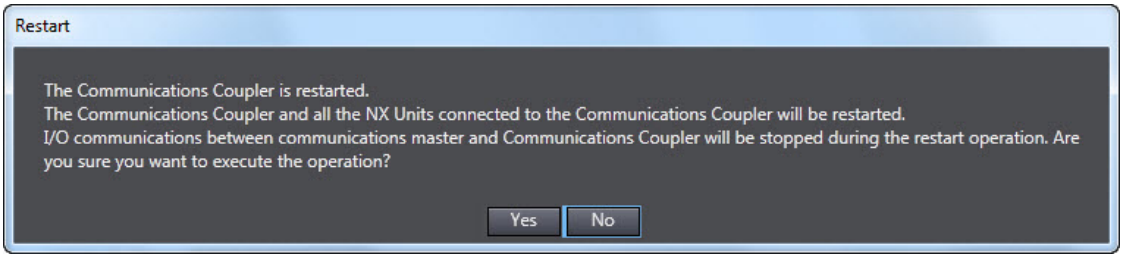


**2** Click the **Yes** button.

After the Units are restarted, a Restart Completion Dialog Box is displayed.

### Restarting an NX Unit

Use the following procedure to restart an NX Unit.

**1** Go online, right-click the NX Unit to restart in the Edit IO Device Terminal Configuration Tab Page, and select ***Restart***.

A Restart Confirmation Dialog Box is displayed.

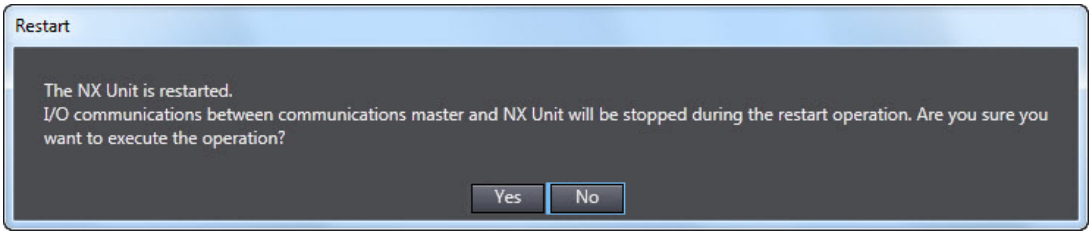


**2** Click the **Yes** button.

After the Unit is restarted, a Restart Completion Dialog Box is displayed.

# 11-6 Changing Event Levels

This section describes changing event levels for the PROFINET Coupler Unit.

## 11-6-1 Introduction

You can change the event levels that are assigned to each Controller event.

## 11-6-2 Details on Changing Event Levels

### Unit of Event Level Settings

Levels are set for each event in each Unit. If the same event code occurs in more than one Unit, you can set a different event level for each Unit.

### Events with Changeable Levels

- **PROFINET Coupler Unit**

  The PROFINET Coupler Unit does not have events for which you can change the event level.

- **NX Units**

  Refer to *Error Event Codes and Troubleshooting* in the *Troubleshooting* section of the manual for the NX Unit for the events for which you can change the event level in each NX Unit.

### When Changes Take Effect

Changes to the event levels take effect only after they are downloaded and the Unit power supply is cycled or the Units are restarted.

**Additional Information**

**Changing the Event Levels for Current Errors**

The event levels of current errors do not change when the event level settings are changed and downloaded. You must restart the PROFINET Coupler Unit or cycle the Unit power supply to enable the changes.

## 11-6-3 Procedure to Change an Event Level

Use the Sysmac Studio to change an event level. The operations are described by using the Sysmac Studio as an example. For Support Software other than the Sysmac Studio, refer to the operation manual for the Support Software that you are using.

After you change an event level, always transfer the operation settings to the Controller.

**1** On the Edit IO Device Terminal Configuration Tab Page, select the Unit for which to change the event level and click the **Unit Operation Settings** button.

The Edit Unit Operation Settings Tab Page is displayed.

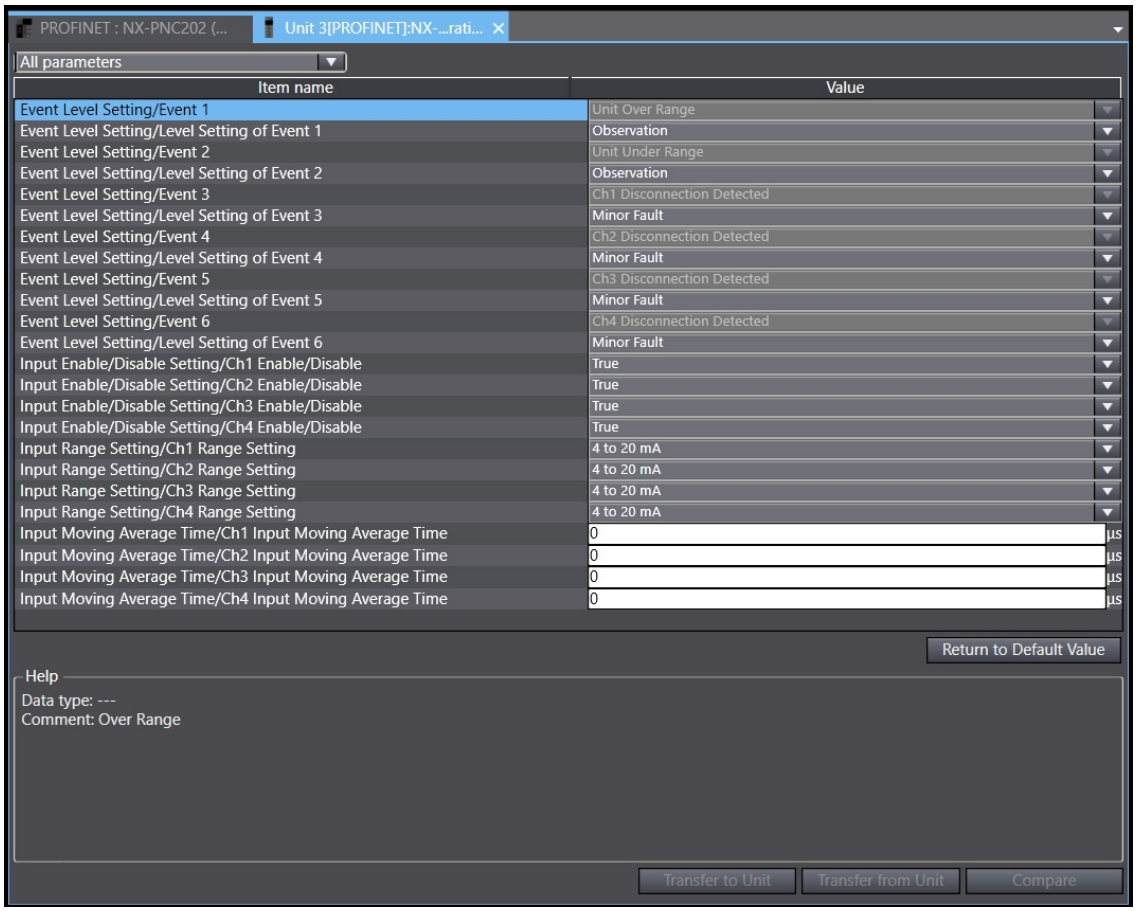


**2** From the events for which *Level setting* is displayed, select the event for which you want to change the level, and then select a level from the list in the *Value* field.

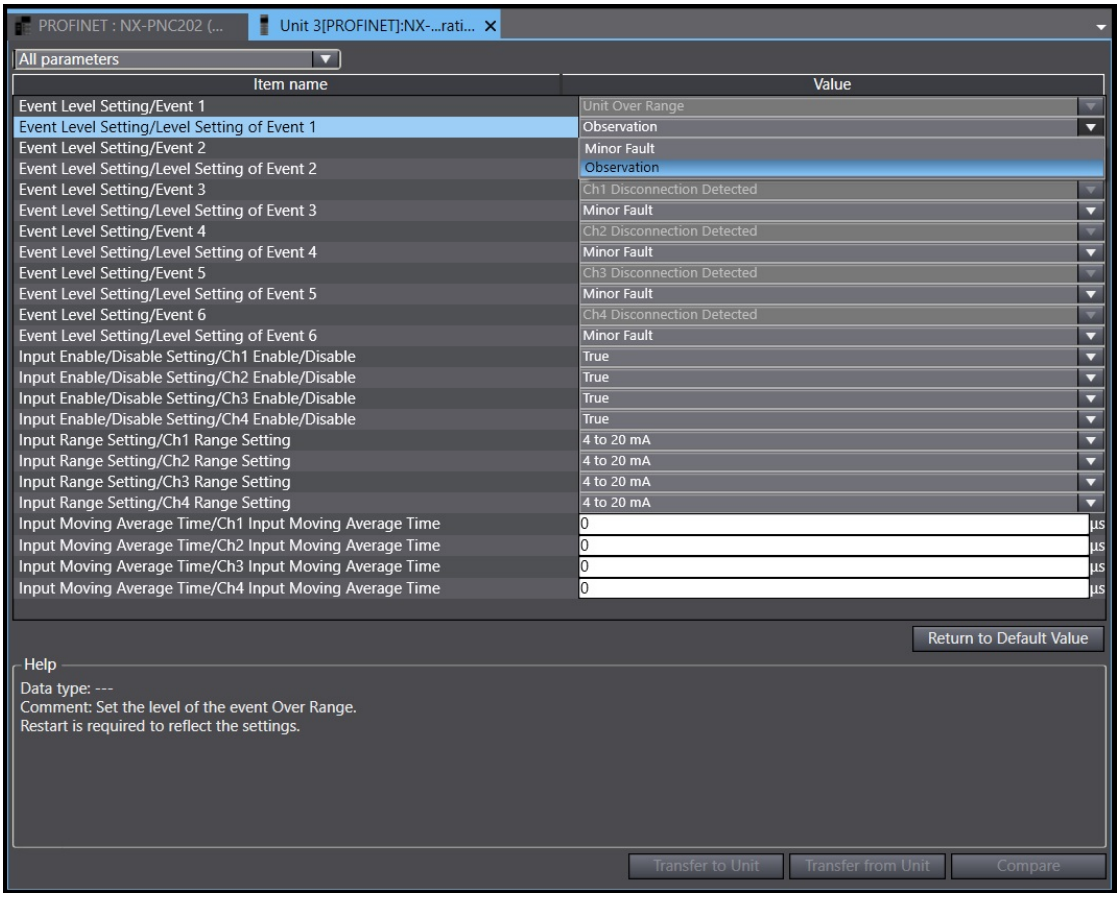


**3** After you make the change, go online and click the **Transfer to Unit** button to transfer the change to the Controller.

The specified event level is changed.

There are no events for the PROFINET Coupler Unit for which you can change the event level.

# 11-7 Fail-soft Operation

This section describes the fail-soft operation for PROFINET Coupler Unit.

## 11-7-1 Overview

This function allows the PROFINET Coupler Unit to start or continue IO refreshing only with the NX Units that can operate normally when an error occurs for the Profinet IO Device Terminal.

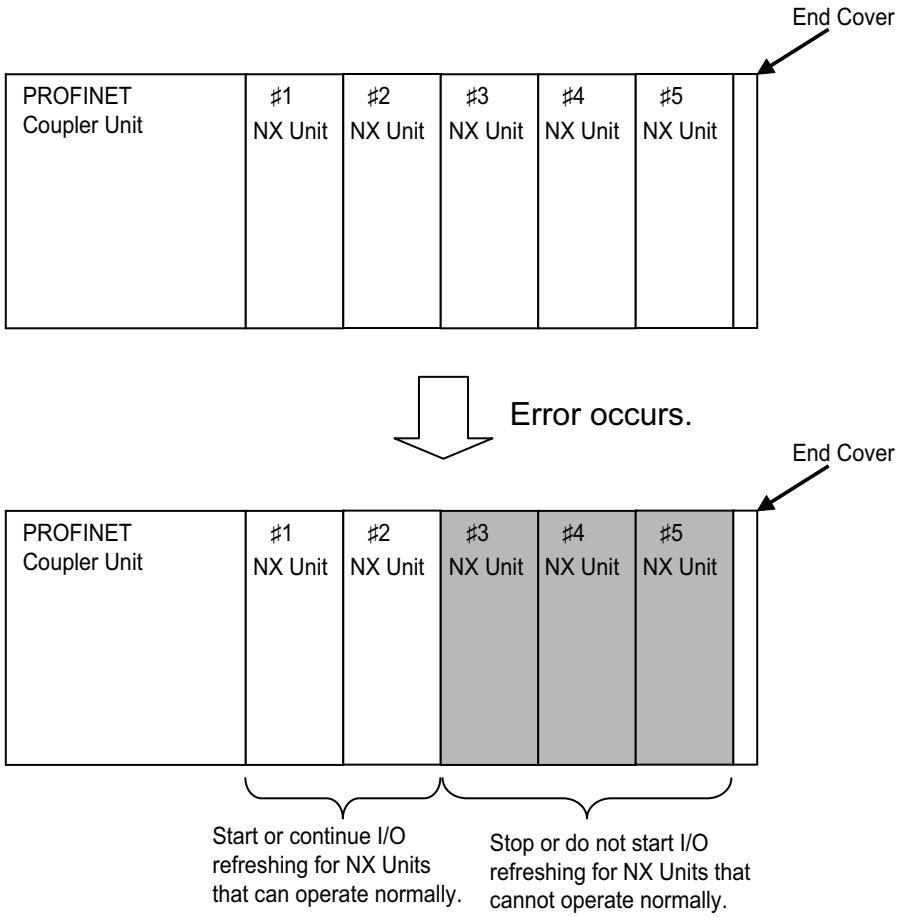


**Precautions for Safe Use**

- If you change the fail-soft operation setting, the output status when the error occurs may also change. Confirm safety before you change the setting.
- If you use fail-soft operation, write programming to determine whether Unit IO data is valid. Without such programming, the user program cannot distinguish between Units for which IO refreshing is continued and Units for which IO refreshing is stopped.

  To determine whether Unit IO data is valid, you must assign the NX Unit IO Data Active Status and the NX Unit Error Status from the IO data that is assignable to the PROFINET Coupler Unit.

  The NX Unit Error Status is not assigned by default. Add it to the IO entry mapping.

## 11-7-2 Application

You can use this function in the following cases.

- When it is dangerous to stop the entire Profinet IO Device Terminal all at once
- To continue the operation of the Profinet IO Device Terminal until the system can be stopped safely through the user program or user operation
- To not stop all devices, i.e., to continue operation for only some devices

## 11-7-3 Details on Fail-soft Operation

This section describes fail-soft operation in detail.

### Operation for Errors with and without Fail-soft Operation

The following table describes the operation of a Profinet IO Device Terminal when the Profinet IO Device Terminal is used with and without fail-soft operation.

| Operating status | Operation when an error occurs while starting the Profinet IO Device Terminal | Operation when an error occurs during normal operation of the Profinet IO Device Terminal |
|---|---|---|
| With fail-soft operation | The PROFINET Coupler Unit starts IO refreshing for the NX Units that can operate normally.<br>It does not start IO refreshing for NX Units that cannot operate normally. | The PROFINET Coupler Unit continues IO refreshing for the NX Units that can operate normally.<br>It stops IO refreshing for NX Units that cannot operate normally. |
| Without fail-soft operation *1 | The PROFINET Coupler Unit does not start IO refreshing for any of the NX Units. | The PROFINET Coupler Unit stops IO refreshing for all of the NX Units. |

*1. When fail-soft operation is not used, all IO refreshing is stopped.

Except for the IO refreshing, the operation when an error occurs for the Profinet IO Device Terminal is the same regardless of whether fail-soft operation is used. Specifically, error notification is provided and errors are recorded in the event log. Also, the indicators will show the error.

### Setting Fail-soft Operation

#### ● Using Fail-soft Operation

To enable fail-soft operation, use the Sysmac Studio to set the Fail-soft Operation Setting in the Unit operation settings for the PROFINET Coupler Unit to Fail-soft operation. After you change the setting, always transfer the Unit operation settings to the PROFINET Coupler Unit. For the Unit operation settings of the PROFINET Coupler Unit and editing procedures, refer to *9-2-3 Unit Operation Settings* on page 9-10. Refer to *9-3 Transferring and Comparing Settings* on page 9-16 for the procedure to transfer the settings.

#### ● Not Using Fail-soft Operation

To disable fail-soft operation, use the Sysmac Studio to set the Fail-soft Operation Setting in the Unit operation settings for the PROFINET Coupler Unit to Stop. The default setting is *Stop*.

After you change the setting, always transfer the Unit operation settings to the PROFINET Coupler Unit. For the Unit operation settings of the PROFINET Coupler Unit and editing procedures, refer to *9-2-3 Unit Operation Settings* on page 9-10. Refer to *9-3 Transferring and Comparing Settings* on page 9-16 for the procedure to transfer the settings.

## Errors to Which Fail-soft Operation Applies

The following errors are examples of the errors to which fail-soft operation applies.

- Unit Configuration Verification Error*1
- NX Unit Communications Timeout
- NX Unit Initialization Error
- NX Unit Startup Error

*1. Even if you enable fail-soft operation, the PROFINET Coupler Unit may not start refreshing IO for any of the NX Units when the Profinet IO Device Terminal is started, depending on the cause of the error. Refer to *Causes of Unit Configuration Verification Errors and Error Operation* on page 11-29 for details on the operation for different error causes.

Refer to *Error Descriptions* on page 12-14 for the errors to which fail-soft operation applies. If an error occurs to which fail-soft operation does not apply, the PROFINET Coupler Unit will stop IO refreshing for all of the NX Units even if you enable fail-soft operation.

## Causes of Unit Configuration Verification Errors and Error Operation

Depending on the cause of a Unit Configuration Verification Error, IO refreshing may not start when the Profinet IO Device Terminal starts even if fail-soft operation is enabled.

Examples are provided below.

| Example of Unit configuration information and actual configuration | | | | | | | Description of configuration | Operation when Profinet IO Device Terminal starts |
|---|---|---|---|---|---|---|---|---|
| | | NX Unit numbers | | | | | | |
| | | 1 | 2 | 3 | 4 | 5 | | |
| Unit configuration information | | A | B | C | D | E (unmounted) | The following models of Units are mounted after the PROFINET Coupler Unit in the order given on the left: A, B, C, D, and E. Unit E, however, has the NX Unit Mounting Setting set to *Disable*. | --- |
| Actual configuration | Case 1 | A | B | C | --- | --- | Unit D is not mounted. | IO refreshing is started for NX Unit numbers 1, 2, and 3 because fail-soft operation is enabled. |
| | Case 2 | A | C | D | --- | --- | Unit B is not mounted. | IO refreshing does not start for any of the NX Units. |
| | Case 3 | A | B | D | C | --- | Units C and D are mounted in reverse order. | IO refreshing does not start for any of the NX Units. |
| | Case 4 | A | B | C | D | D | An extra Unit D is mounted for NX Unit number 5. | IO refreshing does not start for any of the NX Units. |
| | Case 5 | A | B | C | F | --- | Unit F is mounted for NX Unit number 4, but it does not exist in the Unit configuration information. | IO refreshing does not start for any of the NX Units. |
| | Case 6 | A | B | C | D | E | Unit E is mounted for NX Unit number 5 even though its NX Unit Mounting Setting is set to *Disable*. | IO refreshing does not start for any of the NX Units. |

# 11-8 Monitoring Total Power-ON Time

This section describes how to monitor the total power-ON time for PROFINET Coupler Units and NX Units.

## 11-8-1 Overview

Each of the PROFINET Coupler Units and NX Units records the total time that the Unit power supply is ON to it and the total times can be displayed on the Sysmac Studio.

## 11-8-2 Details on Monitoring Total Power-ON Times

The specifications of monitoring the total power-ON times are given in the following table.

| Item | Specification |
|---|---|
| Display unit | • When total power-ON time is less than 1 hour: Minutes<br>• When total power-ON time is 1 hour or longer: Hours |
| Update interval | • When total power-ON time is less than 1 hour: 10 minutes<br>• When total power-ON time is 1 hour or longer: 1 hour |
| Measurement error | 1 hour/month max. |
| Default setting | 0 minutes |

## 11-8-3 Checking Total Power-ON Times

You can use the Production Information on the Sysmac Studio to check the total power-ON times of the PROFINET Coupler Unit and NX Units.

For the procedure to check the Production Information on the Sysmac Studio, refer to *Confirming Unit Versions with the Sysmac Studio* on page 25.

### ● Display When Times Cannot Be Recorded

If the total power-ON time cannot be recorded because of a non-volatile memory hardware error, the total power-ON time is displayed as Invalid record on the Sysmac Studio.

### ● Display for Units That Do Not Support Monitoring the Total Power-ON Time

If a Unit does not support monitoring the total power-ON time, the total power-ON time for the Unit is displayed as “---” on the Sysmac Studio.

### ● Display When Reading the Time Failed

If reading the time failed, the total power-ON time is displayed as “---” on the Sysmac Studio.

# 11-9 Ethernet Switch Functions

This section describes the Ethernet switch functions of the PROFINET Coupler Unit.

The Ethernet ports of a PROFINET Coupler Unit support the layer 2 Ethernet switch functions.

The supported functions are given below.

| Item | |
|---|---|
| Packet buffer size | 64 KB |
| Number of MAC address tables | 1,000 |
| Broadcast storm detection | Supported |
| QoS for PROFINET | Not supported |
| SNMP | Not supported |
| VLAN | Not supported |
| STP | Not supported |
| IGMP snooping | Not supported |
| Port mirroring | Not supported |

**Precautions for Correct Use**

The communications path will be cut off when the PROFINET Coupler Unit is restarted.

# 12

# Troubleshooting

There are several ways to check errors on a Profinet IO Device Terminal. If an error occurs, refer to this section to troubleshoot the error.



**12-1 How to Check for Errors . . . . . 12-2**

**12-2 Checking for Errors and Troubleshooting with the Indicators . . . . . 12-3**

12-2-1 Checking for Errors and Troubleshooting with the Indicators on the PROFINET Coupler Unit . . . . . 12-3

12-2-2 Checking for Errors and Troubleshooting with the Indicators on the NX Units . . . . . 12-8

**12-3 Checking for Errors and Troubleshooting with Sysmac Studio . . . . . 12-9**

12-3-1 Checking Status with the PROFINET Network . . . . . 12-9

12-3-2 Checking for Errors from the Sysmac Studio . . . . . 12-10

12-3-3 Checking for Errors from Support Software Other Than the Sysmac Studio . . . . . 12-10

12-3-4 Event Codes for Errors and Troubleshooting Procedures . . . . . .12-11

**12-4 Resetting Errors . . . . . 12-32**

12-4-1 Procedure to Reset Errors . . . . . 12-32

**12-5 Troubleshooting Other Errors . . . . . 12-35**

# 12-1 How to Check for Errors

Use the following methods to check the status of errors on the Profinet IO Device Terminal.

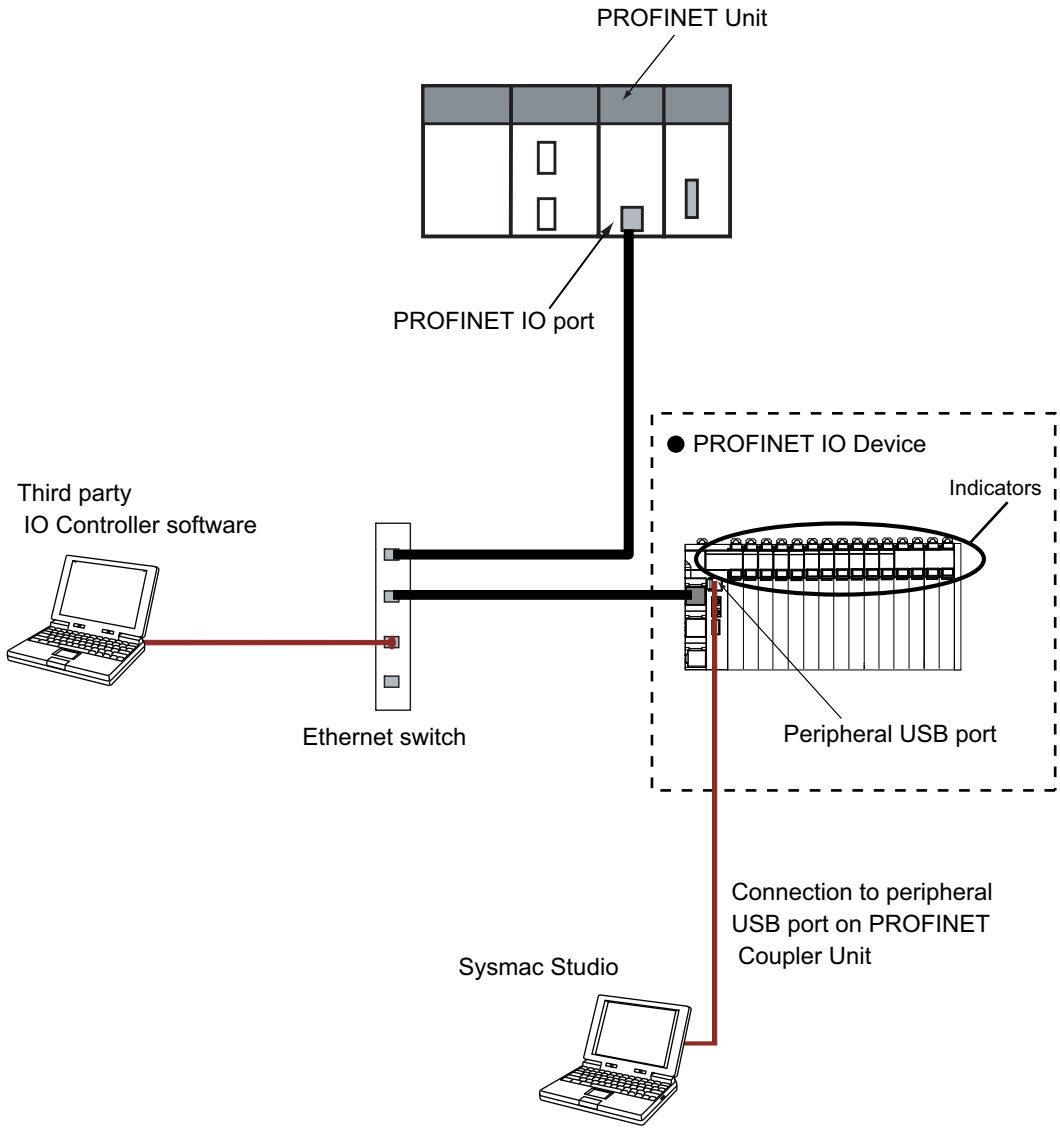


| Checking method | What you can check |
|---|---|
| Checking the indicators | The indicators tell you the status of each Unit, and the level of the error. |
| Troubleshooting with Sysmac Studio | You can check for current errors, a log of past errors, error sources, error causes, and corrections. |

**Precautions for Correct Use**

You cannot use the HMI Troubleshooter for a Profinet IO Device Terminal.

# 12-2 Checking for Errors and Troubleshooting with the Indicators

You can check for errors in the Profinet IO Device Terminal with the indicators on the PROFINET Coupler Unit and the NX Units. This section tells you about the errors that the indicators show and the troubleshooting procedures for them.

## 12-2-1 Checking for Errors and Troubleshooting with the Indicators on the PROFINET Coupler Unit

### Indicators

| Name | Function |
|---|---|
| L/A P1 | The L/A P1 indicator shows the status of the port 1 PROFINET communications. |
| L/A P2 | The L/A P2 indicator shows the status of the port 2 PROFINET communications. |
| RUN/ERR | The RUN/ERR indicator shows the PROFINET Coupler Unit operating status. |
| COMM/BF | The COMM/BF indicator shows the operating status of the PROFINET IO Network communications. |
| TS | The TS indicator gives the status of the PROFINET Coupler Unit and the communications status between the PROFINET Coupler Unit and the NX Units. |
| UNIT PWR | The UNIT PWR indicator shows the status of the Unit power supply. |
| IO PWR | The IO PWR indicator shows the status of the IO power supply. |

### Primary Errors That the Indicators Show and Troubleshooting Procedures

- **Troubleshooting the Primary Errors That are Displayed with the RUN/ERR and COMM/BF Indicators**

  The RUN/ERR indicator shows the PROFINET Coupler Unit operating status.

  The COMM/BF indicator shows the operating status of the PROFINET IO Network communications.

| RUN/ERR | | COMM/BF | | Cause | Corrective action |
|---|---|---|---|---|---|
| Green | Red | Green | Red | | |
| Not Lit | Not Lit | Not Lit | Not Lit | • No power is supplied by the Unit power supply.<br>• Restarting is in progress for the Unit.<br>• Waiting for initialization to start. | Check the following items and make sure that power is correctly supplied from the Unit power supply.<br>Checks Related to the Power Supply<br>• Make sure that the power supply cable is wired properly.<br>• Make sure that there are no breaks in the power supply cable.<br>• Make sure that the power supply voltage is within the specified range.<br>• Make sure that the power supply has enough capacity.<br>• Make sure that the power supply has not failed.<br>• Wait for the Unit to finish initializing.<br>Check the UNIT PWR indicator for additional information. |
| Flashes at 0.5-s intervals. | Flashes at 0.5-s intervals. | Flashes at 0.5-s intervals. | Flashes at 0.5-s intervals. | Device identification when DCP Set/Flush is received. | --- (This is the normal status. Wait until processing is completed.) |
| Lit | --- | Lit | --- | Normal operation and online communication connection is established. | --- (This is the normal status.) |
| --- | Lit | --- | --- | • Bus Controller Error<br>• Non-volatile Memory Hardware Error<br>• Memory Corruption Detected | Cycle power to the IO Device Unit.<br>If cycling the power does not clear the error, replace the IO Device Unit. |
| --- | Flashes at 0.5-s intervals. | --- | --- | • Unit Configuration Verification Error<br>• Non-volatile Memory Control Parameter Error<br>• Unit Configuration Error<br>• Unit Configuration Error, Too Many Units<br>• Unit Configuration Error, Unsupported Configuration<br>• NX Unit Communications Timeout<br>• NX Unit Initialization Error<br>• NX Unit Startup Error | Refer to *12-3-4 Event Codes for Errors and Troubleshooting Procedures* on page 12-11 for troubleshooting information. |
| Lit | --- | --- | Lit | Waiting for a PROFINET IO Controller to connect. | |
| Lit | --- | --- | Flashes at 1.0-s intervals. | The communication coupler has rejected the last connection attempt of a PROFINET IO Controller. | Check the following items.<br>• Profinet IO Controller configuration |

## Troubleshooting the Primary Errors That Are Displayed with the TS Indicators

The TS indicator shows the status of the PROFINET Coupler Unit and the communications status between the PROFINET Coupler Unit and the NX Units.

| TS | | Cause | Corrective action |
|---|---|---|---|
| Green | Red | | |
| Lit | --- | Communication established with all connected NX Units | --- (This is the normal status.) |
| Flashes at 2.0-s intervals. | --- | Initializing | --- (This status is normal. Wait until processing is completed) |
| Flashes at 0.5-s intervals. | --- | Unit configuration information is not set. The PROFINET Coupler Unit is operating according to the actual Unit configuration. | Promptly check whether the configuration is the intended configuration and then register the Unit configuration information on the Sysmac Studio. |
| --- | Lit | Non-volatile Memory Control Parameter Error | If you turn OFF the power supply to the NX Unit or disconnect the Sysmac Studio communications while writing the control parameters is in progress, write the control parameters again. |
| | | Memory Corruption Detected | Cycle the power supply to the IO Device Terminal. If this error occurs again even after you cycle the power supply, replace the PROFINET Coupler Unit. |
| | | Unit Configuration Error, Too Many Units | Make sure that the number of NX Units that are connected does not exceed the upper limit of the specifications. |
| | | Unit Configuration Error, Unsupported Configuration | Make sure that the total byte size of all IO data in the Profinet IO Device Terminal does not exceed the upper size limit of 512 bytes for input data or 512 bytes for output data. |
| | | Unit Configuration Information Error | If you turn OFF the power supply to the PROFINET Coupler Unit or disconnect communications with the Sysmac Studio while a download of Unit configuration information is in progress, clear all memory on the PROFINET Coupler Unit, and then download the Unit configuration information again. |
| | | Unit Configuration Verification Error | There is an inconsistency between the Unit configuration information in the PROFINET Coupler Unit and the Units that are actually connected.<br>• Make sure that the Unit that is connected is registered.<br>• Make sure that the Unit that is registered is connected. |
| | | NX Unit Startup Error | Cycle the power supply to the IO Device Terminal. If this error occurs again even after you cycle the power supply, replace the NX Unit. |
| | | Non-volatile Memory Hardware Error | Replace the Communications Coupler Unit. |
| | | Bus Controller Error | • Mount the NX Units and End Cover securely and secure them with End Plates.<br>• Cycle the power supply to the Communication Coupler Unit.<br>• If the error occurs again even after you make the above correction, replace the Communication Coupler Unit. |
| | | Check the items described above. If this error occurs again even after you cycle the power supply, replace the PROFINET Coupler Unit. | |

| TS | | Cause | Corrective action |
|---|---|---|---|
| Green | Red | | |
| --- | Flashes at 1.0-s intervals. | NX Unit Communications Timeout | Check the following items.<br>• Make sure that the NX Unit is mounted correctly.<br>If the error occurs again even after you make the above correction, replace the NX Unit. |
| | | NX Unit Initialization Error | Connect the Sysmac Studio, and then set and save the Unit configuration information in the PROFINET Coupler Unit again. If this error occurs again, check that there are no errors in the NX Unit settings and IO data mapping information, and correct any errors that are found.<br>For an Analog IO Unit, set the Channel Enable/Disable Setting to Enable for at least one channel.<br>If the error occurs again even after you check the items above, cycle the power supply to the NX Unit in question. If this error persists, replace the NX Unit. |
| Not Lit | Not Lit | No power is supplied by the Unit power supply. | Check the following items and make sure that power is correctly supplied from the Unit power supply.<br>Checks Related to the Power Supply<br>• Make sure that the power supply cable is wired properly.<br>• Make sure that there are no breaks in the power supply cable.<br>• Make sure that the power supply voltage is within the specified range.<br>• Make sure that the power supply has enough capacity.<br>• Make sure that the power supply has not failed.<br>• Wait for the Unit to finish initializing.<br>Check the RUN/ERR and COMM/BF indicators for additional information.<br>Check the UNIT PWR indicator for additional information. |

## ● Troubleshooting the Primary Errors That Are Displayed with the UNIT PWR Indicators

The UNIT PWR indicator shows the status of the Unit power supply.

| UNIT PWR | Cause | Corrective action |
|---|---|---|
| Green | | |
| Lit | --- | --- (This is the normal status.) |
| Not Lit | No power is supplied by the Unit power supply. | Check the following items and make sure that power is correctly supplied from the Unit power supply.<br>Checks related to the Power Supply<br>• Make sure that the power supply cable is wired properly.<br>• Make sure that there are no breaks in the power supply cable.<br>• Make sure that the power supply voltage is within the specified range.<br>• Make sure that the power supply has enough capacity.<br>• Make sure that the power supply has not failed. |

## Troubleshooting the Primary Errors That Are Displayed with the IO PWR Indicators

The IO PWR indicator shows the status of the IO power supply.

| IO PWR<br>Green | Cause | Corrective action |
|---|---|---|
| Lit | --- | --- (This is the normal status.) |
| Not Lit | No power is supplied by the IO power supply. | Check the following items and make sure that power is correctly supplied from the IO power supply.<br>Checks related to the IO Supply<br>• Make sure that the power supply cable is wired properly.<br>• Make sure that there are no breaks in the power supply cable.<br>• Make sure that the power supply voltage is within the specified range.<br>• Make sure that the power supply has enough capacity.<br>• Make sure that the power supply has not failed. |

## Troubleshooting the Primary Errors That Are Displayed with the L/A P1 and L/A P2 Indicators

The L/A P1 and L/A P2 indicators show the status of the port activity.

| L/A P1<br>L/A P2<br>Green | Cause | Corrective action |
|---|---|---|
| Lit | A link was established in the physical layer. | --- (The Coupler Unit is in standby status after the link was established in the physical layer. Wait until processing is completed.) |
| Blinking | Link present and communicating. | --- (This is the normal status.) |
| Not Lit | A link was not established in the physical layer. | Check the following items, and then restart the IO Device Terminal based on the specifications of the connected PROFINET IO Controller.<br>Items Related to the Communications Cable<br>• Make sure that the communications cable is wired properly.<br>• Make sure that there are no breaks in the communications cable or loosening in the mating parts.<br>• Make sure that the cable is of the appropriate length.<br>• Make sure that the communications cable meets the recommended specifications. |
| | The host IO Controller is not operating. | Make sure that the operation of the PROFINET IO Controller is correct. |
| | If you cannot resolve the problem after you check the above items and cycle the Unit power supply, there may be a hardware failure. In that case, replace the PROFINET Coupler Unit. | |

### 12-2-2 Checking for Errors and Troubleshooting with the Indicators on the NX Units

The TS indicator on an NX Unit tells you the status and level of any errors in the NX Unit.

Refer to the manuals for the individual NX Units for details on the other indicators on the NX Units.

# 12-3 Checking for Errors and Troubleshooting with Sysmac Studio

Third party Support Software and Sysmac Studio can be used to check the status and errors for troubleshooting hardware and network issues.

The following table provides a general description of the troubleshooting functions of each tool.

| Applicable Support Software | Troubleshooting Function |
|---|---|
| Third party PROFINET IO Controller software | • Refer to the operator manual of the PROFINET IO Controller for details on the status of the PROFINET network. |
| Sysmac Studio | The following troubleshooting functions are available with the Sysmac Studio.<br>• Check errors managed by the PROFINET Coupler Unit*1<br>• Check errors in the NX Units that are connected to the PROFINET Coupler Unit*2 |

*1. You cannot check errors if there is a fatal error in the PROFINET Coupler Unit.

*2. On NX Units that manage their own errors, current errors cannot be checked after a fatal error occurs in that NX Unit. On NX Units that record their own event logs, the error log cannot be checked after a fatal error occurs in that NX Unit.

## 12-3-1 Checking Status with the PROFINET Network

Refer to the operator manual of the PROFINET IO Controller for details on the status of the PROFINET network.

## 12-3-2 Checking for Errors from the Sysmac Studio

When an error occurs, you can place the Sysmac Studio online to the PROFINET Coupler Unit to check current errors and the log of past errors.

If you cannot check the error on the Sysmac Studio, check the errors using the indicators as outlined in *12-2 Checking for Errors and Troubleshooting with the Indicators* on page 12-3.

### Current Errors

Open the Sysmac Studio's Controller Errors Tab Page to check the current error's level, source, source details, event name, event codes, details, attached information 1 to 4, and correction. Refer to *11-3-3 Reading Event Logs* on page 11-11 for more information on checking controller errors.

Errors in the observation level are not displayed.

**Additional Information**

**Number of Current Errors**

The following table gives the number of errors that are reported simultaneously as current errors in each Unit.

| Unit | Number of simultaneous error notifications |
|---|---|
| PROFINET Coupler Unit | 128 errors |
| NX Units | For NX Units that manage their own current errors, the number of current errors depends on the specifications of the individual Units.<br>For NX Units that do not manage their own current errors, current errors are managed in the PROFINET Coupler Unit, so the number of current errors is limited by the number of errors for the PROFINET Coupler Unit.<br>Refer to the manual for each NX Unit to find out if the NX Unit manages its own current errors. |

If the number of errors exceeds the maximum number of reportable current errors, errors are reported with a priority given to the oldest and highest-level errors. Errors that exceed the limit on simultaneous error notifications are not reported.

Errors that are not reported are still reflected in the error status.

### Log of Past Errors

Open the Sysmac Studio's Event Log Tab Page to check the times, levels, sources, source details, event names, event codes, details, attached information 1 to 4, and corrections for previous errors.

Refer to *12-3-4 Event Codes for Errors and Troubleshooting Procedures* on page 12-11 for details on event codes.

## 12-3-3 Checking for Errors from Support Software Other Than the Sysmac Studio

You can check the error descriptions and logs with Support Software other than the Sysmac Studio.

Refer to the operation manual for the Support Software for the methods to check for errors. Refer to *12-3-4 Event Codes for Errors and Troubleshooting Procedures* on page 12-11 for information on event codes.

## 12-3-4 Event Codes for Errors and Troubleshooting Procedures

This section describes the errors (events) that can occur and how to troubleshoot them.

### Error Table

The errors (i.e., events) that can occur in the PROFINET Coupler Unit are given on the following pages. The following abbreviations are used in the *Level* column.

| Abbreviation | Meaning |
|---|---|
| Maj | Major fault level |
| Prt | Partial fault level |
| Min | Minor fault level |
| Obs | Observation level |
| Info | Information level |

| Event code | Event name | Meaning | Assumed cause | Level | | | | | Reference |
|---|---|---|---|---|---|---|---|---|---|
| | | | | Maj | Prt | Min | Obs | Info | |
| 00210000 hex | Bus Controller Error | An internal bus error occurred. | • A Unit failed or an IO communications error occurred between the Communication Coupler Unit and the NX Unit. | | | √ | | | P. 12-15 |
| 00220000 hex | Non-volatile Memory Hardware Error | An error occurred in non-volatile memory. | • Non-volatile memory failure | | | √ | | | P. 12-16 |
| 10420000 hex | Non-volatile Memory Control Parameter Error | An error occurred in the control parameters. | • The power supply to the Communications Coupler Unit was turned OFF or Sysmac Studio communications were disconnected while writing the Unit operation settings was in progress. | | | √ | | | P. 12-16 |
| 10430000 hex | Memory Corruption Detected | Memory corruption was detected. | • Memory corruption was detected. | | | √ | | | P. 12-18 |
| 24A00000 hex | Unit Configuration Error, Too Many Units | The number of connected NX Units exceeds the maximum value for the Communications Coupler Unit. | • More than the maximum number of NX Units is connected to the Communication Coupler Unit. | | | √ | | | P. 12-19 |
| 35000000 hex | Unit Configuration Information Error | An error occurred in the Unit configuration information in the Communication Coupler Unit. | • The power supply to the Communications Coupler Unit was turned OFF or Sysmac Studio communications were disconnected while downloading the Unit configuration information. | | | √ | | | P. 12-20 |

| Event code | Event name | Meaning | Assumed cause | Level | | | | | Reference |
|---|---|---|---|---|---|---|---|---|---|
| | | | | Maj | Prt | Min | Obs | Info | |
| 35010000 hex | Unit Configuration Verification Error | There is an inconsistency between the Unit configuration information in the Communications Coupler Unit and the Units that are actually connected. Or, the Unit configuration was changed during operation while the Unit configuration information was not set in the Communications Coupler Unit. | • An NX Unit that is registered in the Unit configuration information is not connected.<br>• A connected NX Unit does not agree with the NX Unit that is registered in the Unit configuration information.<br>• An NX Unit that is not registered in the Unit configuration information is connected.<br>• A mounted Unit is disabled in the NX Unit Mounting Setting for the Unit configuration information.<br>• An NX Unit became disconnected during operation.<br>• An NX Unit was connected during operation.<br>• The serial number of a Unit that is registered in the Unit configuration information does not agree with the serial number of the Unit that is connected. (The Serial Number Check Method is set to *Setting = Actual device*.)<br>• The version of a Unit that is registered in the Unit configuration information is newer than the version of the Unit that is connected.<br>• The power supply to an Additional NX Unit Power Supply Unit is not turned ON. | | | √ | | | P. 12-21 |
| 40200000 hex | NX Unit Processing Error | A fatal error occurred in an NX Unit. | • An error occurred in the software. | | | √ | | | P. 12-24 |
| 84C00000 hex | NX Unit Communications Timeout | An error occurred in IO data communications with the NX Units. | • An NX Unit is not mounted properly.<br>• An NX Unit has failed. | | | √ | | | P. 12-25 |
| 84C10000 hex | NX Unit Initialization Error | Initializing an NX Unit failed. | • An error occurred in processing the Communication Coupler Unit.<br>• An initialization error occurred in an NX Unit.<br>• The Channel Enable/Disable Setting for all channels of the Analog Input Unit are set to *Disable*.<br>The Enabled Channel Settings for all channels of the Analog Output Unit are set to *Disable*. | | | √ | | | P. 12-26 |

| Event code | Event name | Meaning | Assumed cause | Level | | | | | Reference |
|---|---|---|---|---|---|---|---|---|---|
| | | | | Maj | Prt | Min | Obs | Info | |
| 84C50000 hex | NX Unit Startup Error | Starting an NX Unit failed. | • A startup error occurred in an NX Unit. | | | √ | | | P. 12-27 |
| 350E0000 hex | NX Bus Cycle Delay Detected | Exceeding the NX bus cycle was detected. | • The NX bus cycle was exceeded. | | | | √ | | P. 12-28 |
| 80220000 hex | NX Message Communications Error | An error was detected in message communications and the message frame was discarded. | For the NX bus of CPU Units<br>• The message communications load is high.<br>For Communications Coupler Units<br>• The message communications load is high.<br>• The communications cable is disconnected or broken.<br>• Message communications were cutoff in communications. | | | | √ | | P. 12-29 |
| 90400000 hex | Event Log Cleared | The event log was cleared. | • The event log was cleared by the user. | | | | | √ | P. 12-30 |
| 90420000 hex | Restart Executed | A restart was executed. | • A restart command was received. | | | | | √ | P. 12-30 |
| 90430000 hex | Memory All Cleared | The Unit settings were cleared. | • The Clear All Memory operation was executed. | | | | | √ | P. 12-31 |

## Error Descriptions

This section describes the information that is given for individual errors.

### IO Device Terminal Error Descriptions

The items that are used to describe individual errors (events) are described in the following copy of an error table.

<table>
<tr><td>Event name</td><td colspan="2">Gives the name of the error.</td><td colspan="2">Event code</td><td colspan="2">Gives the code of the error.</td></tr>
<tr><td>Meaning</td><td colspan="6">Gives a short description of the error.</td></tr>
<tr><td>Source</td><td colspan="2">Gives the source of the error.</td><td>Source details</td><td>Gives details on the source of the error.</td><td>Detection timing</td><td>Tells when the error is detected.</td></tr>
<tr><td>Error attributes</td><td>Level</td><td>Tells the level of influence on control.*1</td><td>Recovery</td><td>Gives the recovery method.*2</td><td>Log category</td><td>Tells which log the error is saved in.*3</td></tr>
<tr><td>Effects</td><td>User program</td><td>Tells what will happen to execution of the user program.*4</td><td>Operation</td><td colspan="3">Provides special information on the operation that results from the error.</td></tr>
<tr><td>Indicators</td><td colspan="6">Gives the status of the PROFINET Coupler Unit indicators.</td></tr>
<tr><td rowspan="2">System-defined variables</td><td colspan="2">Variable</td><td>Data type</td><td colspan="3">Name</td></tr>
<tr><td colspan="6">Lists the variable names, data types, and meanings for system-defined variables that provide direct error notification, that are directly affected by the error, or that contain settings that cause the error.</td></tr>
<tr><td rowspan="2">Cause and correction</td><td colspan="2">Assumed cause</td><td>Correction</td><td colspan="3">Prevention</td></tr>
<tr><td colspan="6">Lists the possible causes, corrections, and preventive measures for the error.</td></tr>
<tr><td>Attached information</td><td colspan="6">This is the attached information that is displayed by the Sysmac Studio or an HMI.</td></tr>
<tr><td>Precautions/ Remarks</td><td colspan="6">Provides precautions, restrictions, and supplemental information. If the user can set the event level, the event levels that can be set, the recovery method, operational information, and other information are also provided.</td></tr>
</table>

*1. One of the following:
Major fault: Major fault level
Partial fault: Partial fault level
Minor fault: Minor fault level
Observation
Information

*2. One of the following:
Automatic recovery: Normal status is restored automatically when the cause of the error is removed.
Error reset: Normal status is restored when the error is reset after the cause of the error is removed.
Cycle the power supply: Normal status is restored when the power supply to the IO Device Terminal is turned OFF and then back ON after the cause of the error is removed.
IO Device Terminal reset: Normal status is restored when the IO Device Terminal is reset after the cause of the error is removed.
Depends on cause: The recovery method depends on the cause of the error.

*3. One of the following:
System: System event log
Access: Access event log

*4. One of the following:
Continues: Execution of the user program will continue.
Stops: Execution of the user program stops.
Starts: Execution of the user program starts.

## ● Error Descriptions

| | | | | | | |
|---|---|---|---|---|---|---|
| **Event name** | Bus Controller Error | | | **Event code** | 00210000 hex | |
| **Meaning** | An internal bus error occurred. | | | | | |
| **Source** | Build-in Ethernet port | | **Source details** | Communications Coupler Unit | **Detection timing** | When power is turned ON to the Communications Coupler Unit or during NX bus communications |
| **Error attributes** | **Level** | Minor fault | **Recovery** | Cycle the power supply to the Communications Coupler Unit | **Log category** | System |
| **Effects** | **User program** | Continues. | **Operation** | IO refreshing for the NX Units in the IO Device Terminal stops. | | |
| **System-defined variables** | **Variable** | | **Data type** | | **Name** | |
| | None | | --- | | --- | |
| **Cause and correction** | **Assumed cause** | | **Correction** | | **Prevention** | |
| | A Unit failed or an IO communications error occurred between the Communication Coupler Unit and the NX Unit. | | Mount the NX Units and End Cover securely and secure them with End Plates.<br>Cycle the power supply to the Communication Coupler Unit.<br>If the error occurs again even after you make the above correction, replace the Communication Coupler Unit. | | None | |
| **Attached information** | None | | | | | |
| **Precautions/ Remarks** | None | | | | | |

| | | | | | | |
|---|---|---|---|---|---|---|
| **Event name** | Non-volatile Memory Hardware Error | | | **Event code** | 00220000 hex | |
| **Meaning** | An error occurred in non-volatile memory. | | | | | |
| **Source** | Build-in Ethernet port | | **Source details** | Communications Coupler Unit | **Detection timing** | When power is turned ON to the Communications Coupler Unit |
| **Error attributes** | **Level** | Minor fault | **Recovery** | Cycle the power supply to the Communications Coupler Unit | **Log category** | System |
| **Effects** | **User program** | Continues. | **Operation** | Writing to non-volatile memory will not be possible.<br>IO refreshing for the NX Units in the IO Device Terminal stops.<br>Messages cannot be sent to the NX Units in the IO Device Terminal. | | |
| **System-defined variables** | **Variable** | | **Data type** | | **Name** | |
| | None | | --- | | --- | |
| **Cause and correction** | **Assumed cause** | | **Correction** | | **Prevention** | |
| | Non-volatile memory failure | | Replace the Communication Coupler Unit. | | None | |
| **Attached information** | None | | | | | |
| **Precautions/ Remarks** | None | | | | | |

| | | | | | | |
|---|---|---|---|---|---|---|
| **Event name** | Non-volatile Memory Control Parameter Error | | | **Event code** | 10420000 hex | |
| **Meaning** | An error occurred in the control parameters. | | | | | |
| **Source** | Build-in Ethernet port | | **Source details** | Communications Coupler Unit | **Detection timing** | When power is turned ON to the Communications Coupler Unit |
| **Error attributes** | **Level** | Minor fault | **Recovery** | Cycle the power supply to the Communications Coupler Unit | **Log category** | System |
| **Effects** | **User program** | Continues. | **Operation** | IO refreshing for the NX Units in the IO Device Terminal stops. Messages cannot be sent to the NX Units in the IO Device Terminal. | | |
| **System-defined variables** | **Variable** | | **Data type** | | **Name** | |
| | None | | --- | | --- | |
| **Cause and correction** | **Assumed cause** | | **Correction** | | **Prevention** | |
| | The power supply to the Communications Coupler Unit was turned OFF or Sysmac Studio communications were disconnected while writing the Unit operation settings was in progress. | | Download the Unit operation settings of the Communications Coupler Unit again. | | Do not turn OFF the power supply to the Communications Coupler Unit or disconnect Sysmac Studio communications while transfer of the Unit operation settings for the Communications Coupler Unit by the Sysmac Studio or save of NX Unit parameters by a message is in progress. | |

| | |
|---|---|
| **Attached information** | None |
| **Precautions/ Remarks** | None |

| | | | | | | |
|---|---|---|---|---|---|---|
| **Event name** | Memory Corruption Detected | | | **Event code** | 10430000 hex | |
| **Meaning** | Memory corruption was detected. | | | | | |
| **Source** | Build-in Ethernet port | | **Source details** | Communications Coupler Unit | **Detection timing** | Continuously |
| **Error attributes** | **Level** | Minor fault | **Recovery** | Cycle the power supply to the Communications Coupler Unit | **Log category** | System |
| **Effects** | **User program** | Continues. | **Operation** | IO refreshing for the NX Units in the IO Device Terminal stops. Messages cannot be sent to the NX Units in the IO Device Terminal. | | |
| **System-defined variables** | **Variable** | | **Data type** | | **Name** | |
| | None | | --- | | --- | |
| **Cause and correction** | **Assumed cause** | | **Correction** | | **Prevention** | |
| | Memory corruption was detected. | | Cycle the power supply to the Communication Coupler Unit. If this error occurs again even after you cycle the power supply, replace the Communication Coupler Unit. | | None | |
| **Attached information** | None | | | | | |
| **Precautions/ Remarks** | None | | | | | |

| | | | | | | |
|---|---|---|---|---|---|---|
| **Event name** | Unit Configuration Error, Too Many Units | | | **Event code** | 24A00000 hex | |
| **Meaning** | The number of connected NX Units exceeds the maximum value for the Communication Coupler Unit. | | | | | |
| **Source** | Build-in Ethernet port | | **Source details** | Communications Coupler Unit | **Detection timing** | When power is turned ON to the Communications Coupler Unit or the IO Device Terminal is restarted |
| **Error attributes** | **Level** | Minor fault | **Recovery** | Cycle power to the Communications Coupler Unit or restart the IO Device Terminal. | **Log category** | System |
| **Effects** | **User program** | Continues. | **Operation** | • Communications Coupler Unit, PROFINET Communications<br>Ethernet communication stops.<br>• Communications Coupler Unit, NX Bus<br>IO refreshing for the NX Units in the IO Device Terminal stops.<br>Messages cannot be sent to the NX Units in the IO Device Terminal. | | |
| **System-defined variables** | **Variable** | | **Data type** | | **Name** | |
| | None | | --- | | --- | |
| **Cause and correction** | **Assumed cause** | | **Correction** | | **Prevention** | |
| | More than the maximum number of NX Units is connected to the Communication Coupler Unit. | | Reduce the number of NX Units that are connected to the maximum number or fewer. | | Configure the Unit within the maximum number of NX Units. | |
| **Attached information** | None | | | | | |
| **Precautions/ Remarks** | None | | | | | |

| | | | | | | |
|---|---|---|---|---|---|---|
| **Event name** | Unit Configuration Information Error | | | **Event code** | 35000000 hex | |
| **Meaning** | An error occurred in the Unit configuration information in the Communications Coupler Unit. | | | | | |
| **Source** | Build-in Ethernet port | | **Source details** | Communications Coupler Unit | **Detection timing** | When power is turned ON to the Communications Coupler Unit or the IO Device Terminal is restarted |
| **Error attributes** | **Level** | Minor fault | **Recovery** | Cycle power to the Communications Coupler Unit or restart the IO Device Terminal. | **Log category** | System |
| **Effects** | **User program** | Continues. | **Operation** | • Communications Coupler Unit, PROFINET Communications<br>Ethernet communication stops.<br>• Communications Coupler Unit, NX Bus<br>IO refreshing for the NX Units in the IO Device Terminal stops.<br>Messages cannot be sent to the NX Units in the IO Device Terminal. | | |
| **System-defined variables** | **Variable** | | **Data type** | | **Name** | |
| | None | | --- | | --- | |
| **Cause and correction** | **Assumed cause** | | **Correction** | | **Prevention** | |
| | The power supply to the Communications Coupler Unit was turned OFF or Sysmac Studio communications were disconnected while downloading the Unit configuration information. | | Clear all of memory in the Communication Coupler Unit, and then download the Unit configuration information again. | | Do not turn OFF the power supply to the Communications Coupler Unit or disconnect Sysmac Studio communications while downloading the Unit configuration information. | |
| **Attached information** | None | | | | | |
| **Precautions/ Remarks** | None | | | | | |

| | | | | | | |
|---|---|---|---|---|---|---|
| **Event name** | Unit Configuration Verification Error | | | **Event code** | 35010000 hex | |
| **Meaning** | There is an inconsistency between the Unit configuration information in the Communication Coupler Unit and the Units that are actually connected. Or, the Unit configuration was changed during operation while the Unit configuration information was not set in the Communication Coupler Unit. | | | | | |
| **Source** | Build-in Ethernet port | | **Source details** | Communications Coupler Unit | **Detection timing** | When power is turned ON to the Communications Coupler Unit, when the IO Device Terminal is restarted, or during NX bus communications |
| **Error attributes** | **Level** | Minor fault | **Recovery** | Cycle power to the Communications Coupler Unit or restart the IO Device Terminal. | **Log category** | System |
| **Effects** | **User program** | Continues. | **Operation** | When Fail-soft Operation Is Set to *Fail-soft* and Fail-soft Operation Is Possible<br>• Communications Coupler Unit, NX Bus<br>IO refreshing for the NX Units that have a verification error in the IO Device Terminal stops.<br>Messages cannot be sent to the NX Units that have a verification error in the IO Device Terminal.<br>When Fail-soft Operation Is Set to *Fail-soft* and Fail-soft Operation Is Not Possible<br>The operation is the same as when fail-soft operation is set to *Stop*.<br>When Fail-soft Operation Is Set to *Stop*<br>• Communications Coupler Unit, PROFINET Communications<br>Ethernet communications stops.<br>• Communications Coupler Unit, NX Bus<br>IO refreshing for the NX Units in the IO Device Terminal stops.<br>Messages cannot be sent to the NX Units in the IO Device Terminal. | | | |
| **System-defined variables** | **Variable** | | **Data type** | | **Name** | |
| | None | | --- | | --- | |

| Cause and correction | Assumed cause | Correction | Prevention |
|---|---|---|---|
| | An NX Unit that is registered in the Unit configuration information is not connected. | Connect the NX Units that are registered in the Unit configuration information.<br>Or, connect the Sysmac Studio, unregister the unconnected NX Unit from the Unit configuration information, and download the Unit configuration information to the Communications Coupler Unit. | Download the Unit configuration information that contains the actually connected configuration to the Communication Coupler Unit. |
| | A connected NX Unit does not agree with the NX Unit that is registered in the Unit configuration information. | Connect the NX Units that are registered in the Unit configuration information.<br>Or, connect the Sysmac Studio, change the Unit configuration information to reflect the actually connected NX Units, and download the Unit configuration information to the Communications Coupler Unit. | |
| | An NX Unit that is not registered in the Unit configuration information is connected. | Remove the NX Unit that is not registered in the Unit configuration information.<br>Or, connect the Sysmac Studio, add the unregistered NX Unit to the Unit configuration information, and download the Unit configuration information to the Communications Coupler Unit. | |

| | | | |
|---|---|---|---|
| **Cause and correction** | A mounted Unit is disabled in the NX Unit Mounting Setting for the Unit configuration information. | Remove the Unit that is disabled in the NX Unit Mounting Setting for the Unit configuration information. Or, connect the Sysmac Studio, enable the disabled Unit in the NX Unit Mounting Setting, download the Unit configuration information to the Communications Coupler Unit, and mount the enabled Unit. | Remove the Unit that is disabled in the NX Unit Mounting Setting for the Unit configuration information. Or, connect the Sysmac Studio, enable the disabled Unit in the NX Unit Mounting Setting, download the Unit configuration information to the Communications Coupler Unit, and mount the enabled Unit. |
| | An NX Unit became disconnected during operation. | Turn OFF the power supply to the IO Device Terminal, mount the NX Units securely, and turn the power supply to the IO Device Terminal back ON. | Do not connect or disconnect NX Units during operation. |
| | An NX Unit was connected during operation. | Cycle the power supply to the IO Device Terminal. | |
| | The serial number of a Unit that is registered in the Unit configuration information does not agree with the serial number of the Unit that is connected. (The Serial Number Check Method is set to *Setting = Actual device*.) | Download the Unit configuration information in which the serial number of the connected Unit is set to the Communications Coupler Unit. | If the Serial Number Check Method is set to *Setting = Actual device*, read the serial numbers of the actually connected Units to the Sysmac Studio and use them. |
| | The version of a Unit that is registered in the Unit configuration information is newer than the version of the Unit that is connected. | Create a Unit configuration information with the version of the actually connected Unit, and download it to the Communications Coupler Unit. | Make sure that the results of the compare and merge operation for the Unit configuration of the IO Device Terminal do not indicate any incompatibilities before you download the Unit configuration information to the Communications Coupler Unit. |
| | The power supply to an Additional NX Unit Power Supply Unit is not turned ON. | Turn ON the power supply to the Additional NX Unit Power Supply Units before the NX Unit wait time expires. | Increase the length of the NX Unit wait time. Turn ON the power supply to the Additional NX Unit Power Supply Unit before you turn ON the power supply to the Communication Coupler Unit. |
| **Attached information** | Attached information 1: Unit number of the NX Unit where the error was detected<br>Attached Information 2: Error details<br>0: A connected Unit has the same model number as the Unit that is registered in the Unit configuration information, but the Unit is not compatible.<br>1: A Unit that is registered in the Unit configuration information is not connected.<br>2: A Unit that is not registered in the Unit configuration information is connected. | | |
| **Precautions/ Remarks** | None | | |

| | | | | | | |
|---|---|---|---|---|---|---|
| **Event name** | NX Unit Processing Error | | | **Event code** | 40200000 hex | |
| **Meaning** | A fatal error occurred in an NX Unit. | | | | | |
| **Source** | Build-in Ethernet port | | **Source details** | Communications Coupler Unit | **Detection timing** | Continuously |
| **Error attributes** | **Level** | Minor fault | **Recovery** | Cycle the power supply to the Communications Coupler Unit | **Log category** | System |
| **Effects** | **User program** | Continues. | **Operation** | IO refreshing for the NX Units in the IO Device Terminal stops. Messages cannot be sent to the NX Units in the IO Device Terminal. | | |
| **System-defined variables** | **Variable** | | **Data type** | | **Name** | |
| | None | | --- | | --- | |
| **Cause and correction** | **Assumed cause** | | **Correction** | | **Prevention** | |
| | An error occurred in the software. | | Contact your OMRON representative. | | None | |
| **Attached information** | Attached information 1: System information<br>Attached information 2: System information<br>Attached information 3: System information<br>Attached information 4: System information | | | | | |
| **Precautions/ Remarks** | None | | | | | |

| | | | | | | |
|---|---|---|---|---|---|---|
| **Event name** | NX Unit Communications Timeout | | | **Event code** | 84C0 0000 hex | |
| **Meaning** | An error occurred in IO data communications with the NX Units. | | | | | |
| **Source** | Build-in Ethernet port | | **Source details** | Communications Coupler Unit | **Detection timing** | Continuously |
| **Error attributes** | **Level** | Minor fault | **Recovery** | Reset error in Communications Coupler Unit. | **Log category** | System log |
| **Effects** | **User program** | Continues. | **Operation** | When Fail-soft Operation Is Set to *Fail-soft*<br>Not affected.<br>When Fail-soft Operation Is Set to *Stop*<br>• Communications Coupler Unit, PROFINET Communications<br>Ethernet communication stops.<br>• Communications Coupler Unit, NX Bus<br>IO refreshing for the NX Units in the IO Device Terminal stops. | | |
| **System-defined variables** | **Variable** | | **Data type** | | **Name** | |
| | None | | --- | | --- | |
| **Cause and correction** | **Assumed cause** | | **Correction** | | **Prevention** | |
| | An NX Unit is not mounted properly. | | Mount the NX Units and End Cover securely and secure them with End Plates. | | Mount the NX Units and End Cover securely and secure them with End Plates. | |
| | An NX Unit has failed. | | If the error occurs again even after you make the above correction, replace the NX Unit. | | None | |
| **Attached information** | Attached information 1: Unit number of the NX Unit where the error was detected | | | | | |
| **Precautions/ Remarks** | None | | | | | |

| | | | | | | |
|---|---|---|---|---|---|---|
| **Event name** | NX Unit Initialization Error | | | **Event code** | 84C10000 hex | |
| **Meaning** | Initializing an NX Unit failed. | | | | | |
| **Source** | Build-in Ethernet port | | **Source details** | Communications Coupler Unit | **Detection timing** | When power is turned ON to the Communications Coupler Unit, the IO Device Terminal is restarted, an NX Unit is restarted, or an error is reset in the Communications Coupler Unit |
| **Error attributes** | **Level** | Minor fault | **Recovery** | Reset error in Communications Coupler Unit. | **Log category** | System |
| **Effects** | **User program** | Continues. | **Operation** | When Fail-soft Operation Is Set to *Fail-soft*<br>• Communications Coupler Unit, NX Bus<br>IO refreshing for all of the NX Units that have an initialization error in the IO Device Terminal stops.<br>When Fail-soft Operation Is Set to *Stop*<br>• Communications Coupler Unit, PROFINET Communications<br>Ethernet communication stops.<br>• Communications Coupler Unit, NX Bus<br>IO refreshing for the NX Units in the IO Device Terminal stops. | | |
| **System-defined variables** | **Variable** | | **Data type** | | **Name** | |
| | None | | --- | | --- | |
| **Cause and correction** | **Assumed cause** | | **Correction** | | **Prevention** | |
| | An error occurred in processing the Communication Coupler Unit. | | Set and save the Unit configuration information in the Communication Coupler Unit again.<br>If this error occurs again, check that there are no errors in the NX Unit settings and IO data mapping information, and correct any errors that are found. | | Correctly set NX Units and IO data mapping information, and set and save the Unit configuration information in the Communication Coupler Unit. | |
| | An initialization error occurred in an NX Unit. | | Cycle the power supply to the relevant NX Unit.<br>If the error occurs again, replace the NX Unit. | | None | |
| | The Channel Enable/Disable Setting for all channels of the Analog Input Unit are set to *Disable*.<br>The Enabled Channel Settings for all channels of the Analog Output Unit are set to *Disable*. | | Set the Enabled Channel Setting to *Enable* for at least one channel. | | Set the Enabled Channel Setting to *Disabled* for only the unused channels. | |
| **Attached information** | Attached information 1: Unit number of the NX Unit where the error was detected | | | | | |
| **Precautions/ Remarks** | None | | | | | |

| | | | | | | |
|---|---|---|---|---|---|---|
| **Event name** | NX Unit Startup Error | | | **Event code** | 84C50000 hex | |
| **Meaning** | Starting an NX Unit failed. | | | | | |
| **Source** | Build-in Ethernet port | | **Source details** | Communications Coupler Unit | **Detection timing** | When power is turned ON to the Communications Coupler Unit, the IO Device Terminal is restarted, or an error is reset in the Communications Coupler Unit |
| **Error attributes** | **Level** | Minor fault | **Recovery** | Cycle power to the Communications Coupler Unit or restart the IO Device Terminal. | **Log category** | System |
| **Effects** | **User program** | Continues. | **Operation** | When Fail-soft Operation Is Set to *Fail-soft*<br>• Communications Coupler Unit, NX Bus<br>IO refreshing for all of the NX Units that have a startup error in the IO Device Terminal stops.<br>Messages cannot be sent to the NX Units that have an initialization error in the IO Device Terminal. | | |
| | | | | When Fail-soft Operation Is Set to *Stop*<br>• Communications Coupler Unit, PROFINET Communications<br>Ethernet communication stops.<br>• Communications Coupler Unit, NX Bus<br>IO refreshing for the NX Units in the IO Device Terminal stops.<br>Messages cannot be sent to the NX Units that have a startup error in the IO Device Terminal. | | |
| **System-defined variables** | **Variable** | | **Data type** | | **Name** | |
| | None | | --- | | --- | |
| **Cause and correction** | **Assumed cause** | | **Correction** | | **Prevention** | |
| | A startup error occurred in an NX Unit. | | Cycle the power supply to the Communication Coupler Unit. If this error occurs again even after you cycle the power supply, replace the NX Unit. | | None | |
| **Attached information** | Attached information 1: Slot number of the NX Unit where the error occurred | | | | | |
| **Precautions/ Remarks** | None | | | | | |

| | | | | | | |
|---|---|---|---|---|---|---|
| **Event name** | NX Bus Cycle Delay Detected | | | **Event code** | 350E0000 hex | |
| **Meaning** | Exceeding the NX bus cycle was detected. | | | | | |
| **Source** | Build-in Ethernet port | | **Source details** | Communications Coupler Unit | **Detection timing** | --- |
| **Error attributes** | **Level** | Observation | **Recovery** | --- | **Log category** | System |
| **Effects** | **User program** | Continues. | **Operation** | Not affected. | | |
| **System-defined variables** | **Variable** | | **Data type** | | **Name** | |
| | None | | --- | | --- | |
| **Cause and correction** | **Assumed cause** | | **Correction** | | **Prevention** | |
| | The NX bus cycle was exceeded. | | Use the Sysmac Studio and download the configuration information. | | None | |
| **Attached information** | None | | | | | |
| **Precautions/ Remarks** | None | | | | | |

| | | | | | | |
|---|---|---|---|---|---|---|
| **Event name** | NX Message Communications Error | | | **Event code** | 80220000 hex | |
| **Meaning** | An error was detected in message communications and the message frame was discarded. | | | | | |
| **Source** | Build-in Ethernet port | | **Source details** | Communications Coupler Unit | **Detection timing** | During message communications |
| **Error attributes** | **Level** | Observation | **Recovery** | --- | **Log category** | System |
| **Effects** | **User program** | Continues. | **Operation** | Not affected. | | |
| **Sys-tem-defined variables** | **Variable** | | **Data type** | | **Name** | |
| | None | | --- | | --- | |
| **Cause and correction** | **Assumed cause** | | **Correction** | | **Prevention** | |
| | For the NX bus of CPU Units | | | | | |
| | The message communications load is high. | | Reduce the number of times that instructions are used to send NX messages. | | Reduce the number of times that instructions are used to send NX messages. | |
| | For Communications Coupler Units | | | | | |
| | The message communications load is high. | | Reduce the number of times instructions are used to send NX messages. | | Reduce the number of times instructions are used to send NX messages. | |
| | The communications cable is disconnected or broken.<br>This cause does not apply if attached information 2 is 0 (NX bus). | | Connect the communications cable securely. | | Connect the communications cable securely. | |
| | Message communications were cutoff by executing the followings in message communications.<br>• Transfer of parameters by the Sysmac Studio | | --- | | --- | |
| **Attached information** | Attached information 1: System information<br>Attached Information 2: Type of communications where error occurred<br>0: NX bus<br>1: EtherCAT<br>2: Serial communications (USB)<br>3: EtherNet/IP<br>4: PROFINET<br>65535: Internal Unit communications (routing) | | | | | |
| **Precautions/ Remarks** | None | | | | | |

| | | | | | | |
|---|---|---|---|---|---|---|
| **Event name** | Event Log Cleared | | | **Event code** | 90400000 hex | |
| **Meaning** | The event log was cleared. | | | | | |
| **Source** | Build-in Ethernet port | | **Source details** | Communications Coupler Unit | **Detection timing** | When commanded from user |
| **Error attributes** | **Level** | Information | **Recovery** | --- | **Log category** | Access |
| **Effects** | **User program** | Continues. | **Operation** | Not affected. | | |
| **System-defined variables** | **Variable** | | **Data type** | | **Name** | |
| | None | | --- | | --- | |
| **Cause and correction** | **Assumed cause** | | **Correction** | | **Prevention** | |
| | The event log was cleared by the user. | | --- | | --- | |
| **Attached information** | Attached information 1: Events that were cleared<br>1: The system event log was cleared.<br>2: The access event log was cleared. | | | | | |
| **Precautions/ Remarks** | None | | | | | |

| | | | | | | |
|---|---|---|---|---|---|---|
| **Event name** | Restart Executed | | | **Event code** | 90420000 hex | |
| **Meaning** | A restart was executed. | | | | | |
| **Source** | Build-in Ethernet port | | **Source details** | Communications Coupler Unit | **Detection timing** | When the IO Device Terminal or an NX Unit is restarted |
| **Error attributes** | **Level** | Information | **Recovery** | --- | **Log category** | Access |
| **Effects** | **User program** | Continues. | **Operation** | Operation starts after the restart is executed. | | |
| **System-defined variables** | **Variable** | | **Data type** | | **Name** | |
| | None | | --- | | --- | |
| **Cause and correction** | **Assumed cause** | | **Correction** | | **Prevention** | |
| | A restart command was received. | | --- | | --- | |
| **Attached information** | Attached information 1: Type of restart<br>0: The IO Device Terminal was restarted.<br>1: An NX Unit was restarted.<br>Attached information 2: Unit number of the NX Unit where the restart was executed | | | | | |
| **Precautions/ Remarks** | None | | | | | |

| | | | | | | |
|---|---|---|---|---|---|---|
| **Event name** | Memory All Cleared | | | **Event code** | 90430000 hex | |
| **Meaning** | The Unit settings were cleared. | | | | | |
| **Source** | Build-in Ethernet port | | **Source details** | Communica-tions Coupler Unit | **Detection timing** | When commanded from user |
| **Error attributes** | **Level** | Information | **Recovery** | --- | **Log category** | Access |
| **Effects** | **User program** | Continues. | **Operation** | The Unit settings were cleared. | | |
| **Sys-tem-defined variables** | **Variable** | | **Data type** | | **Name** | |
| | None | | --- | | --- | |
| **Cause and correction** | **Assumed cause** | | **Correction** | | **Prevention** | |
| | The Clear All Memory operation was executed. | | --- | | --- | |
| **Attached information** | Attached information 1 and 3: Unit number of the NX Unit where the Clear All Memory operation was performed. If the Clear All Memory operation was performed for the entire IO Device Terminal, the information given will be 255.<br>Attached information 2 and 4: Execution results<br>0: Successful<br>1: Hardware error<br>2: Initialization failed<br>3: Initialization not possible | | | | | |
| **Precautions/ Remarks** | Refer to the attached information for the results of the Clear All Memory operation. | | | | | |

# 12-4 Resetting Errors

Current errors in an IO Device Terminal are retained, unless you reset them, until you cycle the power supply or restart the IO Device Terminal.

To reset errors, you must remove the cause of the current error. If you reset an error without removing the cause, the same error will occur again.

**Precautions for Correct Use**

- Resetting the errors does not remove the cause of the error.
- Always remove the cause of the error and then reset the error.

You can use the following methods to reset errors in an IO Device Terminal.

| Method | Operation | Scope of error reset | Description |
|---|---|---|---|
| Commands from Sysmac Studio | Resetting errors | All errors in the IO Device Terminal | Reset the error from the Troubleshooting Dialog Box on the Sysmac Studio. |
| | | Errors for individually specified NX Units | |
| | Clearing all memory for the IO Device Terminal | All errors in the IO Device Terminal | If the causes for the IO Device Terminal errors are removed, all errors in the IO Device Terminal are reset. |
| | Restarting the Coupler Unit | | |
| Cycling the Unit power supply to the IO Device Terminal | --- | All errors in the IO Device Terminal | If the causes for the IO Device Terminal errors are removed, all errors in the IO Device Terminal are reset when the IO Device Terminal is restarted. |

## 12-4-1 Procedure to Reset Errors

The current errors and the contents of the event logs in the online Controller are read and reset in the Troubleshooting Dialog Box. Use the Support Software. The operations are described by using the Sysmac Studio as an example. For Support Software other than the Sysmac Studio, refer to the operation manual for the Support Software that you are using.

### Resetting Errors Individually in Units in the Profinet IO Device Terminal

**1** Connect the computer on which the Sysmac Studio is installed to the peripheral USB port on the PROFINET Coupler Unit and go online.

**2** Select ***Troubleshooting*** from the Tools Menu while online. You can also click the **Troubleshooting** button in the toolbar.

The following Troubleshooting Dialog Box is displayed.

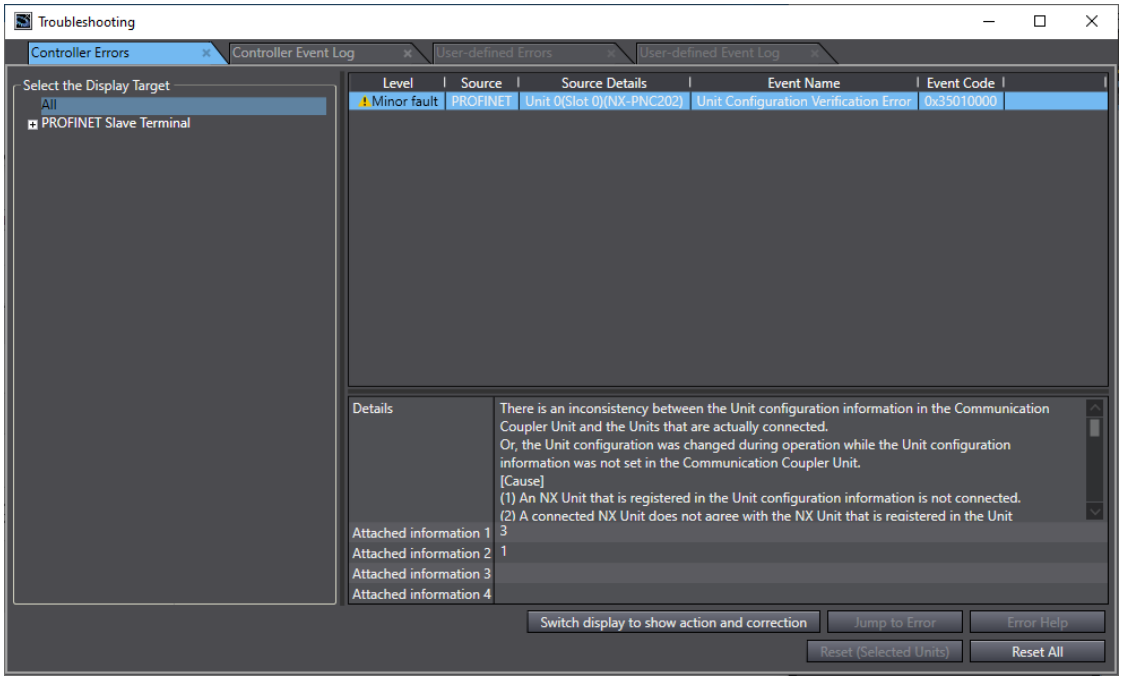


The current Controller errors are displayed on the Controller Errors Tab Page (observations and information are not displayed).

**3** In the Select the Display Target of the Controller Errors Tab Page, select the Unit for which to reset the errors and click the **Reset (Selected Units)** button.

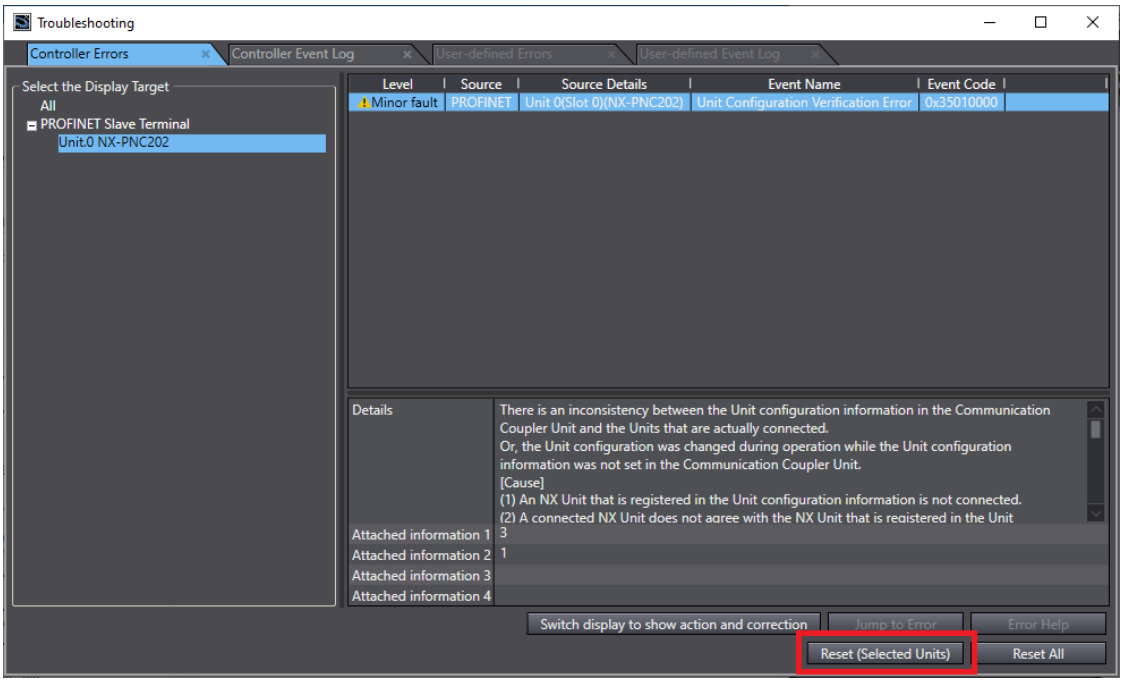


The errors in the selected NX Unit are reset.

### Additional Information

If you select the Profinet IO Device Terminal or PROFINET Coupler Unit, errors are reset for the entire Profinet IO Device Terminal.

## Resetting the Errors in All Units in the Profinet IO Device Terminal at the Same Time

**1** Connect the computer on which the Sysmac Studio is installed to the peripheral USB port on the PROFINET Coupler Unit and go online.

**2** Select ***Troubleshooting*** from the Tools Menu while online. You can also click the **Troubleshooting** button in the toolbar.

The following Troubleshooting Dialog Box is displayed.

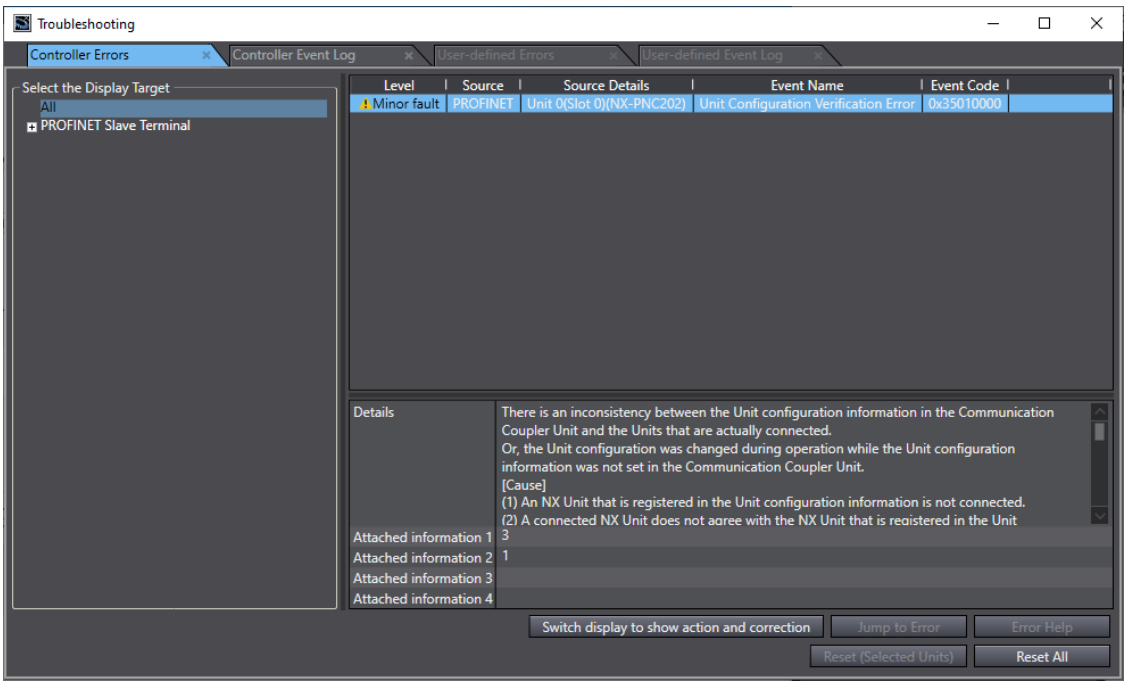


The current Controller errors are displayed on the Controller Errors Tab Page (observations and information are not displayed).

**3** Click the **Reset All** button.

The errors are reset. Any errors for which the causes remain are displayed again.

# 12-5 Troubleshooting Other Errors

This section describes error symptoms that cannot be resolved with the methods for checking for errors and troubleshooting that were described earlier.

| Status | Possible cause and correction |
|---|---|
| When the Unit configuration was registered, the TS indicator on the PROFINET Coupler Unit flashed green, and the TS indicators on the first few NX Units near the PROFINET Coupler Unit flash green and the TS indicators on the other NX Units are not lit. | The NX bus connector on the left side of the Units where the TS indicators are not lit is not connected properly.<br>Connect it properly and cycle the power supply.<br> 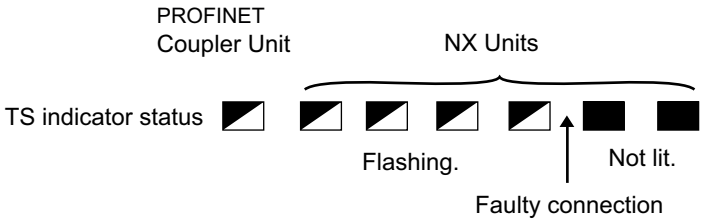 <br> |
| • All TS indicators on the Profinet IO Device Terminal (PROFINET Coupler Unit and NX Units) are lit green.<br>• When the output of the PROFINET Coupler is active, the OUT indicator on the Digital IO Unit is lit yellow but the actual output is OFF.<br>• A device (e.g., sensor) that is connected to the Digital IO Unit is ON, but a signal is not input, and the IN and OUT indicators are both not lit. | • The power supply to the Additional NX Unit Power Supply Unit is not turned ON. Check the wiring and turn ON the power supply.<br>• The NX bus connectors between the Units are not connected properly. Make sure that the Unit hookup guides are properly engaged.<br>• The wiring for the IO power supply is disconnected. Check the wiring. |

# 13

# Maintenance and Inspection

This section describes the procedures for cleaning, inspecting, and replacing PROFINET Coupler Units.


**13-1 Cleaning and Maintenance . . . . . 13-2**

13-1-1 Cleaning . . . . . 13-2

13-1-2 Periodic Inspections . . . . . 13-2

**13-2 Maintenance Procedures . . . . . 13-4**

13-2-1 Importing and Exporting Data . . . . . 13-4

13-2-2 Replacement Procedure for the PROFINET Coupler Unit . . . . . 13-5

13-2-3 Basic Replacement Procedure for NX Units . . . . . 13-6

13-2-4 Using Settings from NX Units on Other Coupler Units . . . . . 13-7

# 13-1 Cleaning and Maintenance

This section describes daily maintenance and the cleaning and inspection methods.

Inspect the PROFINET Coupler Unit daily or periodically in order to keep it in optimal operating condition.

## 13-1-1 Cleaning

Clean the PROFINET Coupler Unit regularly as described below in order to keep it in optimal operating condition.

- Wipe the network over with a soft, dry cloth when doing daily cleaning.
- If dirt remains even after wiping with a soft, dry cloth, wipe over with a cloth that has been wet with a sufficiently diluted detergent (2%) and wrung dry.
- A smudge may remain on the Unit from gum, vinyl, or tape that was left on for a long time. Remove the smudge when cleaning.

**Precautions for Correct Use**

- Never use volatile solvents, such as paint thinner, benzene, or chemical wipes.
- Do not touch the NX bus connector.

## 13-1-2 Periodic Inspections

Although the major components in PROFINET Coupler Unit have an extremely long life time, they can deteriorate under improper environmental conditions. Periodic inspections are thus required.

Inspection is recommended at least once every six months to a year, but more frequent inspections will be necessary in adverse environments.

Take immediate steps to correct the situation if any of the conditions in the following table are not met.

### Periodic Inspection Points

| No. | Item | Inspection | Criteria | Action |
|---|---|---|---|---|
| 1 | External power supplies | Measure the power supply voltage at the terminal blocks, and make sure that they are within the criteria voltage. | The voltage must be within the power supply voltage range. | Use a voltage tester to check the power supply at the terminals. Take necessary steps to bring voltage of the supplied power to within the power supply voltage range. |
| 2 | IO power supplies | Measure the power supply voltages at the input and output terminal blocks, and make sure that they are within the criteria voltage. | The voltages must be within the IO specifications for each NX Unit. | Use a voltage tester to check the power supply at the terminals. Take necessary steps to bring voltage of the IO power supplies to within the IO specifications of each Unit. |

| No. | Item | Inspection | Criteria | Action |
|---|---|---|---|---|
| 3 | Ambient environment | Check that the ambient operating temperature is within the criteria. | 0 to 55°C | Use a thermometer to check the temperature and ensure that the ambient temperature remains within the allowed range of 0 to 55°C. |
| | | Check that the ambient operating humidity is within the criteria. | 10 to 95%<br>With no condensation. | Use a hygrometer to check the humidity and ensure that the ambient humidity remains between 10% and 95%.<br>Check that condensation does not occur due to rapid changes in temperature. |
| | | Check that the PROFINET Coupler Unit is not in direct sunlight. | Not in direct sunlight | Protect the PROFINET Coupler Unit if necessary. |
| | | Check for accumulation of dirt, dust, salt, or metal powder. | No accumulation | Clean and protect the PROFINET Coupler Unit if necessary. |
| | | Check for water, oil, or chemical sprays hitting the PROFINET Coupler Unit. | No spray | Clean and protect the PROFINET Coupler Unit if necessary. |
| | | Check for corrosive or flammable gases in the area of the PROFINET Coupler Unit. | No corrosive or flammable gases | Check by smell or use a gas sensor. |
| | | Check that the PROFINET Coupler Unit is not subject to direct vibration or shock. | Vibration and shock must be within specifications. | Install cushioning or shock absorbing equipment if necessary. |
| | | Check for noise sources nearby the PROFINET Coupler Unit. | No significant noise sources | Either separate the PROFINET Coupler Unit and noise source or protect the PROFINET Coupler Unit. |
| 4 | Installation and wiring | Check that the DIN Track mounting hooks on all Units are securely locked. | No looseness | Securely lock all DIN Track mounting hooks. |
| | | Check that cable connectors are fully inserted and locked. | No looseness | Correct any improperly installed connectors. |
| | | Check that the screws on the End Plates (PFP-M) are tight. | No looseness | Tighten loose screws with a Phillips screwdriver. |
| | | Check that each Unit is connected along the hookup guides, and fully inserted until it contacts the DIN Track. | The Units must be connected and securely in place on the DIN Track. | Connect each Unit along the hookup guides, and insert each Units until it contacts the DIN Track. |
| | | Check for damaged external wiring cables. | No visible damage | Check visually and replace cables if necessary. |

## Tools Required for Inspections

### Required Tools

- Flat-blade screwdriver
- Phillips screwdriver
- Voltage tester or voltmeter
- Industrial alcohol and clean cotton cloth

### Tools Required Occasionally

- Oscilloscope
- Thermometer and hygrometer

# 13-2 Maintenance Procedures

This section describes the procedures to replace the IO Device Terminal components.

The PROFINET Coupler Unit stores NX Unit setting data. If you replace the PROFINET Coupler Unit, you must restore the settings for the PROFINET Coupler and the NX Units using the Sysmac Studio.

Replacing an NX Unit on a previously configured PROFINET Coupler Unit will cause that NX Unit to inherit settings from the PROFINET Coupler Unit.

## 13-2-1 Importing and Exporting Data

You can use the Sysmac Studio to export and import the IO Device Terminal settings and NX Unit settings as files. This allows you to reuse settings from an IO Device Terminal or NX Units for other Coupler Units or NX Units such as:

- Unit configuration information
- IO allocation information
- Unit operation settings
- Hardware switch information

Refer to *9-2-5 Sysmac Studio Functions Used as Required* on page 9-12 for more information about importing and exporting IO Device Terminal settings.

## 13-2-2 Replacement Procedure for the PROFINET Coupler Unit

This section describes how to replace the PROFINET Coupler Unit.

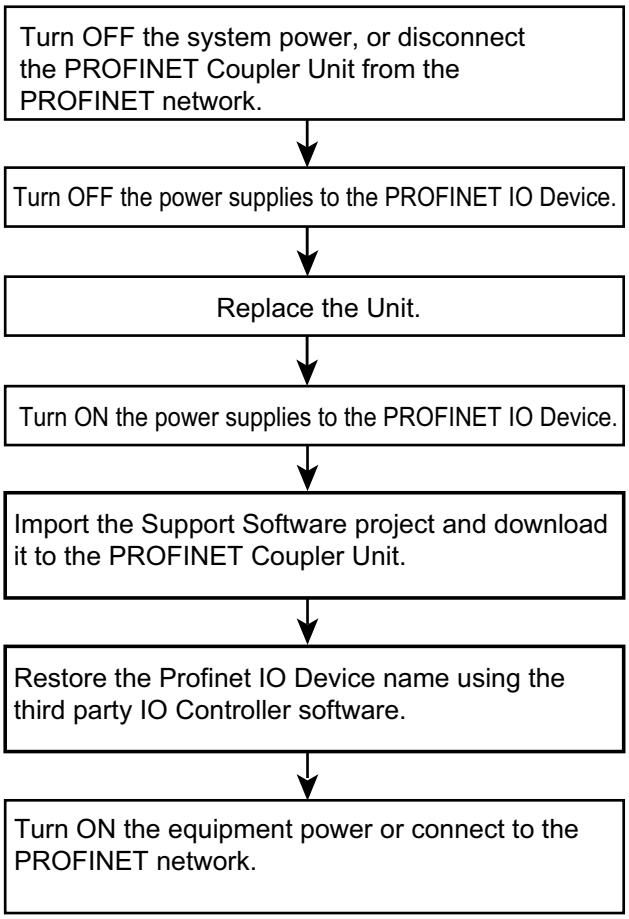


**1** Turn OFF the power supply to all of the equipment or disconnect the Profinet IO Device Terminal that includes the PROFINET Coupler Unit from the PROFINET network.

**2** Turn OFF the Unit power supplies and IO power supplies for the Profinet IO Device Terminal.

**3** Replace the PROFINET Coupler Unit. Make sure that the hardware switches are set to the same settings as the original Unit.

**4** Turn ON the Unit power supplies and IO power supplies to the Profinet IO Device Terminal.

**5** Import a Sysmac Studio project, download and verify data for the PROFINET Coupler Unit using the Sysmac Studio.

**6** Turn ON the power supply to all of the equipment, or connect the Profinet IO Device Terminal to the PROFINET network.

**Additional Information**

- Refer to *6-1 Installing Units* on page 6-2 for the procedures to mount and remove the PROFINET Coupler Unit.
- Refer to *Precautions for Safe Use* on page 16 for the procedures to disconnect and connect the PROFINET Coupler Unit from and to the PROFINET network.

## 13-2-3 Basic Replacement Procedure for NX Units

This section describes the basic replacement procedures for the NX Units that are mounted after the PROFINET Coupler Unit.

The procedure may differ from the one that is described below depending on the model number of the NX Unit. Refer to the manual for the specific NX Unit to replace, in addition to this manual.

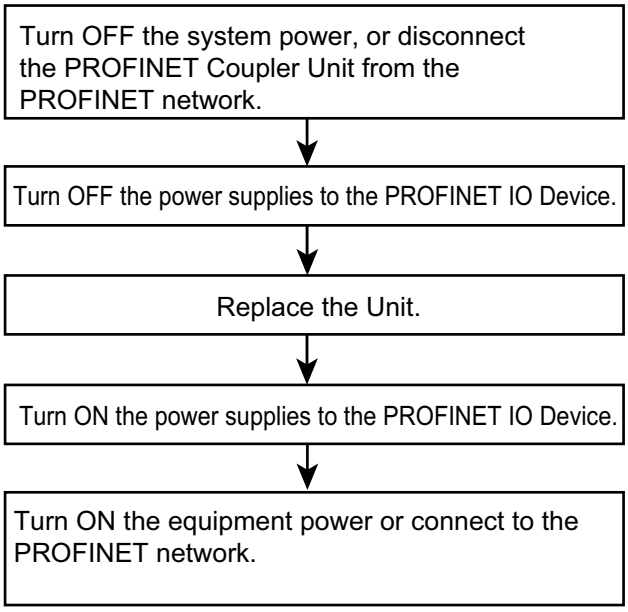


1. Turn OFF the power supply to all of the equipment or disconnect the Profinet IO Device Terminal that includes the NX Unit to replace from the PROFINET network.
2. Turn OFF the Unit power supplies and IO power supplies for the Profinet IO Device Terminal.
3. Replace the NX Unit. If the NX Unit has hardware switches, set the hardware switches to the same settings as on the original NX Unit.
4. Turn ON the Unit power supplies and IO power supplies to the Profinet IO Device Terminal.
5. Turn ON the power supply to all of the equipment, or connect the Profinet IO Device Terminal to the PROFINET network.

**Precautions for Correct Use**

**Checking the Serial Numbers of NX Units**

If the Serial Number Check Method setting on the PROFINET Coupler Unit is set to *Setting = Actual device*, temporarily change this setting to *None*, and then replace the NX Unit. Get the serial number of the new NX Unit, and then set the Serial Number Check Method setting on the PROFINET Coupler Unit to *Setting = Actual device* again.
If you replace the NX Unit with the Serial Number Check Method setting set to *Setting = Actual device*, a Unit Configuration Verification Error will occur.

Refer to *9-2-2 Setting the NX Unit Configuration Information* on page 9-5 for details on the Serial Number Check Method setting for the PROFINET Coupler Unit, and to *9-2-5 Sysmac Studio Functions Used as Required* on page 9-12 for details on getting the serial numbers of NX Units.

**Additional Information**

- Refer to the manual for the specific NX Unit for the procedures to mount and remove the NX Unit.
- Refer to *Precautions for Safe Use* on page 16 for the procedures to disconnect and connect the PROFINET Coupler Unit from and to the PROFINET network.

## 13-2-4 Using Settings from NX Units on Other Coupler Units

To mount and use NX Units that were set for one IO Device Terminal under a different PROFINET Coupler Unit, you must export and import NX Unit settings.

To use the NX Unit settings on a different IO Device Terminal, you must export the NX Unit settings from the Unit configuration of the set IO Device Terminal and then import the settings to the Unit configuration of the newly mounted IO Device Terminal.

**Additional Information**

- Refer to *9-2-5 Sysmac Studio Functions Used as Required* on page 9-12 for information on exporting and importing NX Unit settings.
- Some of the NX Unit settings are saved in the PROFINET Coupler Unit. Therefore, even if you upload the NX Unit settings to an NX Unit that was set on a different IO Device Terminal, the original NX Unit settings are not correctly applied to the newly mounted IO Device Terminal. If you want to use the set NX Unit by mounting it to another IO Device Terminal, transfer the Unit operation settings to the relevant NX Unit.

# A

# Appendices

The appendices provide information on dimensions and terminal block model numbers.


**A-1 Dimensions . . . . . A-2**

A-1-1 PROFINET Coupler Unit . . . . . A-2

A-1-2 End Cover . . . . . A-3

**A-2 Terminal Block Model Numbers . . . . . A-4**

A-2-1 Model Number Notation . . . . . A-4

A-2-2 Models . . . . . A-5

# A-1 Dimensions

## A-1-1 PROFINET Coupler Unit

### ● PROFINET Coupler Unit Only

Unit: mm

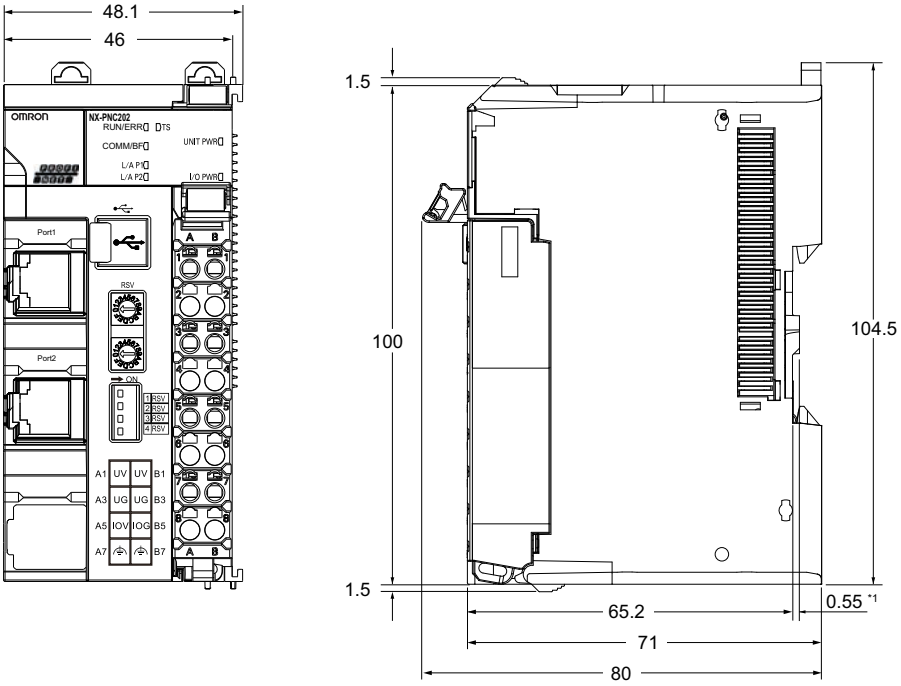


*1. The dimension is 1.35 mm for Units with lot numbers through December 2014.

### ● With Cables Connected

Unit: mm

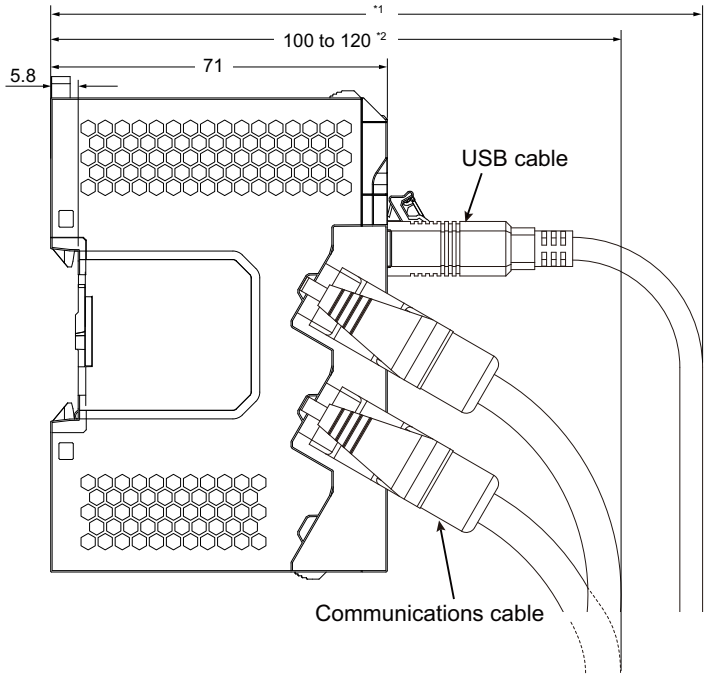


*1. This dimension depends on the specifications of the commercially available USB certified cable. Check the specifications of the USB cable that is used.

*2.This is the dimension from the back of the Unit to the communications cables.

· 100 mm: When an MPS588-C Connector is used.

· 120 mm: When an XS6G-T421-1 Connector is used.

## A-1-2 End Cover

Unit: mm

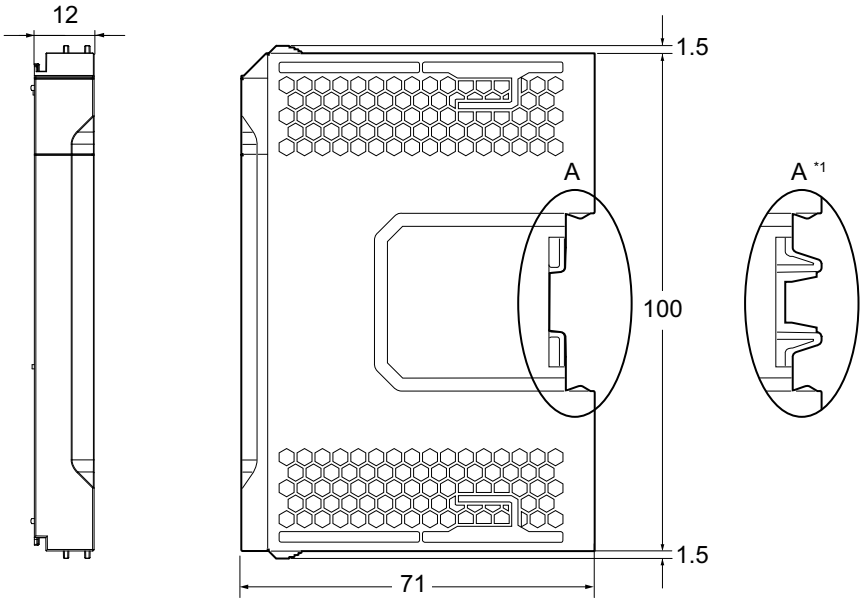


*1. This is the shape for Units with lot numbers through December 2014.

# A-2 Terminal Block Model Numbers

This section describes the models of screwless clamping terminal blocks for the PROFINET Coupler Units and NX Units.

## A-2-1 Model Number Notation

The terminal block model numbers are assigned based on the following rules.

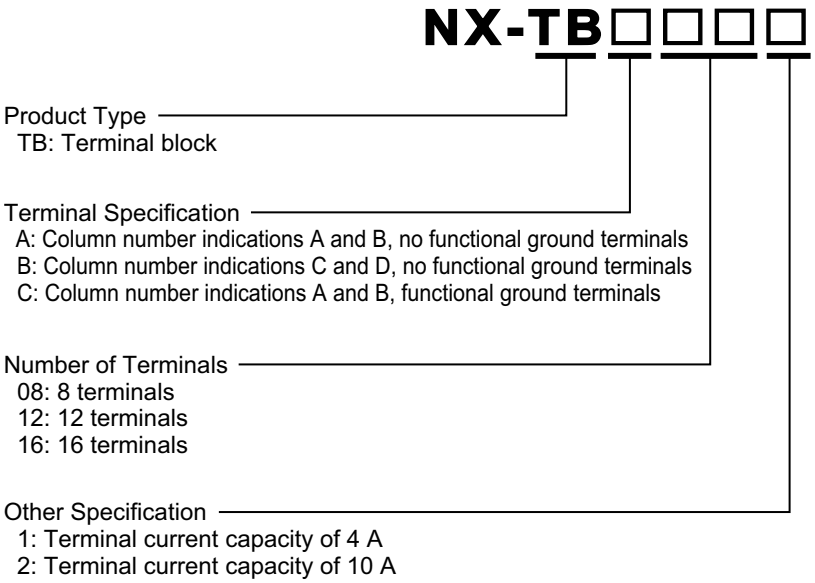

## A-2-2 Models

The following table lists the terminal blocks.

**Precautions for Correct Use**

Do not use terminal blocks with a terminal current capacity of 4 A because this is not sufficient for the NX-PNC202.

Refer to *4-5 Terminal Blocks* on page 4-10 for the terminal blocks that are applicable to the PROFINET Coupler Unit.

| Terminal block model number | Number of terminals | Ground terminal mark | Terminal current capacity |
|---|---|---|---|
| NX-TBA081 | 8 | None | 4 A |
| NX-TBA121 | 12 | None | 4 A |
| NX-TBA161 | 16 | None | 4 A |
| NX-TBB121 | 12 | None | 4 A |
| NX-TBB161 | 16 | None | 4 A |
| NX-TBA082 | 8 | None | 10 A |
| NX-TBA122 | 12 | None | 10 A |
| NX-TBA162 | 16 | None | 10 A |
| NX-TBB122 | 12 | None | 10 A |
| NX-TBB162 | 16 | None | 10 A |
| NX-TBC082 | 8 | Provided | 10 A |
| NX-TBC162 | 16 | Provided | 10 A |

Note When you purchase a terminal block, purchase an NX-TB□□□2.

I

# Index

I

# Index

## Numerics

35-mm DIN Track ..... 6-6

## A

Access log ..... 11-9
Accessibility for Operation and Maintenance ..... 6-3
Accessory ..... 2-8, 3-6
Actual Operation ..... 18
Additional IO Power Supply Unit ..... 5-4
Additional NX Unit Power Supply Unit ..... 5-3
Analog IO Units ..... 2-6
Applicable wires ..... 7-12
Application Considerations ..... 12
Application Programming Interface (API) ..... 1-6
Application Relation (AR) ..... 1-6
Atmosphere ..... 6-25
Attaching a Terminal Block ..... 7-21

## B

Bit Offset ..... 9-30
Blocks ..... 5-17
Bus Controller Error ..... 12-11

## C

Changing Event Levels ..... 11-3, 11-24
Channel ..... 1-5
Cleaning ..... 13-2
Clear All Memory ..... 11-3
Clearing All Memory ..... 11-16, 11-20
Coding Pins ..... 7-22
COMM/BF ..... 12-3
COMM/BF Indicator ..... 4-6
Commercially Available Markers ..... 6-18
Communication Relation (CR) ..... 1-6
Communication Unit ..... 1-5
Communications Connectors ..... 4-9
Communications connectors ..... 4-2
Communications Coupler Units ..... 28
Comparing and Merging ..... 9-12, 9-15
Comparing Settings ..... 9-18
Configuration width ..... 6-21
Confirming Unit Versions ..... 25
Conformance to UL and CSA Standards ..... 23
Connecting wires ..... 7-14
Consumer Status ..... 1-5
Crimping tool ..... 7-12
Current errors ..... 12-10
Cyclic IO Refreshing ..... 11-3

## D

Definition of Precautionary Information ..... 13
Device name ..... 9-6, 9-7
Digital IO Units ..... 2-6
Dimensions ..... A-2
DIN Track contact plate ..... 4-2, 4-12
DIN Track Contact Plates ..... 7-8
DIN Track insulation spacers ..... 7-10
DIN Track mounting hooks ..... 4-2, 4-3
DIN Tracks ..... 6-7
DIP switch ..... 4-2
Disclaimers ..... 12
Disposal ..... 20
During Power Supply ..... 14

## E

Edit Configuration Pane ..... 9-8
Edit IO DeviceTerminal Configuration Tab Page ..... 9-7
Effective Value IO Power Supply Current ..... 5-14
End Cover ..... 2-5
End Plate ..... 6-6, 6-7
Error descriptions ..... 12-14
Error Table ..... 12-11
Event Codes ..... 11-10
Event Levels ..... 11-10
Event Log Cleared ..... 12-13
Event Log Tab ..... 12-10
Event Logs ..... 11-3, 11-8
Event sources ..... 11-9
Export NX Unit Settings ..... 9-13
External IO Signal Lines ..... 6-27
External power supplies ..... 5-16
External Wiring ..... 6-28

## F

Fail-safe Measures ..... 14
Fail-soft Operation ..... 2-3, 11-3, 11-27
Fail-soft Operation Setting ..... 9-10
Ferrules ..... 7-12
Forced Air Circulation ..... 6-24
Forced Ventilation ..... 6-24
Free-Run Refreshing ..... 11-3
Functional ground terminal ..... 4-12
Functional Ground Terminals ..... 7-7

## G

Going Online ..... 2-9
Ground terminal mark ..... 4-10
Ground Terminals ..... 7-7
Grounding ..... 6-30, 7-8

Grounding method .....3-2
Grounding Methods .....6-31
Grounding the DIN Track .....7-9
GSDML .....28

## H

Hardware switch .....4-8
High Temperatures .....6-23
Humidity .....6-25

## I

I/O Power Supply Terminals .....7-6
I/O refreshing .....10-2
I/O Response Time .....10-3
IEEE 802.1Q .....8-2
Import NX Unit Settings .....9-13
Index .....28, 1-4
Indicators ..... 4-2, 4-3, 4-5, 12-3
Information level .....11-10
Input Output Consumer Status (IOCR) .....1-5
Input Output Provider Status (IOPS) .....1-5
Input Tab .....9-30
Inrush current .....5-18
Inrush Current Restrictions .....5-14
Installation .....16
Installation Dimensions .....6-20
Installation height .....6-22
Installation in cabinets or control panels .....6-2
Installation Location .....6-2, 6-25
Installation locations for protective devices .....5-20
Installation method .....6-3
Installation orientation .....6-8
Installation Width .....6-21
IO Module .....1-5
IO Allocation .....9-30
IO allocation information .....9-5
IO allocation settings .....9-7
IO Allocation Size .....9-30
IO Data Size .....9-30
IO Device Terminal configuration information .....9-5
IO Device Terminal Parameters .....9-4
IO DeviceTerminal operation settings .....9-5
IO Mapping .....9-20, 9-26, 9-27
IO port .....28
IO power supply .....5-2, 5-18
IO Power Supply Connection Unit .....5-5
IO PWR Indicator .....4-7, 12-3
IO refreshing .....28
Isolating the PROFINET IO Device Terminal .....7-9

## L

L/A P1 Indicator .....4-7, 12-3
L/A P2 Indicator .....4-7, 12-3
Load Cell Input Unit .....2-6
Log of the errors .....12-10
Low Temperatures .....6-24

## M

Maintenance .....13-4
Major fault .....11-10
Marker attachment locations .....4-2, 4-3
Markers .....6-17
Maximum I/O Response Time .....10-5
Maximum IO power supply current .....5-11
Memory All Cleared .....12-13
Memory Corruption Detected .....12-11
Minimum I/O Response Time .....10-4
Minor fault level .....11-10
Unit width .....9-6, 9-7
Model name .....9-6, 9-7
Model number .....4-5
Mounting ..... 16, 21
Mounting an NX Unit to the PROFINET Coupler Unit ...6-12
Mounting NX Units to Each Other .....6-13
Mounting the End Cover .....6-15
Mounting the End Plates .....6-16
Mounting the PROFINET IO Device Terminal
on DIN Track ..... 6-3

## N

Natural Cooling .....6-23
Network Configuration Information .....28
Noise Immunity .....6-3
Non-volatile Memory Control Parameter Error .....12-11
Non-volatile Memory Hardware Error .....12-11
Notation of Unit Versions on Products .....24
Number of connectable NX Units .....3-4
Number of mounted Units .....9-6
NX Bus .....28
NX bus connector .....4-2, 4-3
NX Bus Cycle Delay Detected .....12-13
NX Message Communications Error .....12-13
NX Unit .....28
NX Unit application data .....9-5
NX Unit Communications Timeout .....12-12
NX Unit Connection Time .....9-6
NX Unit Error Status .....9-24
NX Unit Initialization Error .....12-12
NX Unit IO Data Active Status .....9-24
NX Unit Mounting Setting .....9-6, 9-7
NX Unit Mounting Settings .....11-3, 11-4
NX Unit Number .....9-6, 9-7
NX Unit power .....5-2
NX Unit power supply capacity .....5-7
NX Unit Power Supply Capacity and Restrictions .....5-7
NX Unit Processing Error .....12-12
NX Unit Serial Numbers .....9-13
NX Unit Startup Error .....12-13
NX Units .....2-5
NX-IO .....28
NX-IO Units Data .....9-2

## O


Object ..... 28
Observation ..... 11-10
Observation level ..... 11-10
One-point Grounding ..... 6-30
Operation ..... 19
Output Tab ..... 9-30
Output to File ..... 9-30
Overcurrent ..... 5-18


## P


Padding ..... 9-30
Partial fault level ..... 11-10
PDO Communications ..... 28
Periodic inspection points ..... 13-2
Periodic Inspections ..... 13-2
Peripheral USB Port ..... 4-9
Peripheral USB port ..... 4-2
Position ..... 9-30
Position Interface Units ..... 2-6
Power Supply Design ..... 18
Power Supply Types ..... 5-2
Power supply-related Units ..... 5-3
Process Data ..... 28
Process Data Communications ..... 28
Process Data Object ..... 28
Product name ..... 9-6, 9-7
PROFIBUS ..... 1-2
PROFINET ..... 1-28, 1-2
PROFINET Communications ..... 19
PROFINET Coupler Unit ..... 2-5
PROFINET IO
  Controller ..... 1-4
  Device ..... 1-4
  Supervisor ..... 1-4
PROFINET IO Controller ..... 1-28, 2-5
PROFINET IO Device ..... 28
Profinet IO Device Terminal ..... 28
Protective devices ..... 5-18
Protrusions for removing the Unit .....4-2, 4-3, 4-4
Provider / consumer model ..... 1-5
Provider Status ..... 1-5


## R


Real-Time
  Capabilities ..... 8-2
  Communication ..... 8-2
Recommended power supplies ..... 5-16, 5-18
Recommended screwdriver ..... 7-15
Release hole ..... 7-14
Release holes ..... 4-10
Removing a Terminal Block ..... 7-20
Removing Units ..... 6-18
Removing Wires ..... 7-14, 7-19
Resetting Errors ..... 11-3, 12-32
Restart Executed ..... 12-13
Restarting .....11-3, 11-22
Restarting individual NX Units ..... 11-22
Restarting IO DeviceTerminal ..... 11-22
Restricted region .....6-9, 6-12
Restrictions on inrush current ..... 5-14
Room Cooling ..... 6-24
Rotary switches ..... 4-2
RUN/ERR ..... 12-3
RUN/ERR Indicator ..... 4-5


## S


Selecting protective devices ..... 5-19
Serial Number .....9-6, 9-7
Serial Number Check Method ..... 9-6
Setting the IO DeviceTerminal ..... 11-3
Setting the NX Unit Configuration Information ..... 9-7
Slot ..... 1-4
Software Licenses and Copyrights ..... 23
Solid Wires ..... 7-13
Special marker printer ..... 6-18
specifications ..... 3-2
Storage ..... 21
Subindex ..... 28
Submodule ..... 1-5
Subslot ..... 1-4
Supply from external source ..... 5-9
Supply from the NX bus ..... 5-9
System log ..... 11-9
System Units ..... 2-6


## T


TCP/IP Parameters ..... 9-20
Temperature Control ..... 6-2
Temperature Control Unit ..... 2-6
Terminal block .....4-2, 4-3, 4-10
Terminal Block Part Names and Functions ..... 4-10
Terminal hole ..... 7-14
Terminal holes ..... 4-10
Terminal number indications ..... 4-10
Through-wiring ..... 7-6
Toolbox ..... 9-8
Total Current Consumption ..... 5-11
Total Power-ON Time .....11-3, 11-30
Transferring ..... 15
Transporting ..... 16
TS Indicator .....4-6, 12-3
Turning OFF the Power Supply .....18, 21
Turning ON the Power Supply ..... 18
Twisted wires ..... 7-13
Twisted-pair cable ..... 7-2


## U


Unit application data ..... 9-11
Unit Configuration Error, Too Many Units ..... 12-11
Unit Configuration Information Error ..... 12-11
Unit Configuration Verification Error ..... 12-12

Unit hookup guides .....4-2, 4-3, 4-4
Unit operation settings .....9-6, 9-7, 9-10
Unit power supply .....5-2, 5-16
Unit Power Supply Terminals .....7-6
UNIT PWR Indicator .....4-7, 12-3
Unit Settings Pane .....9-8
Unit specifications .....4-2, 4-3
Unit version .....9-6, 9-7
Unit versions .....24
Unmounted Unit .....11-7
Unmounted Units .....11-5
Unwired terminals .....7-6
USB Connecting Cable .....7-26

## V

Vibration and Shock .....6-25
Voltage and Current Inputs .....15
Voltage drop in the I/O power supply .....5-10, 5-12

## W

Power consumption .....9-7
Supply Power/Available Power .....9-6, 9-7
Warranties .....11
Watchdog .....1-6
Wire Layout .....6-26
Wiring .....15, 17, 21, 6-28
Wiring Ducts .....6-4
Wiring Routes .....6-28

**OMRON Corporation** **Industrial Automation Company**
**Kyoto, JAPAN**
**Contact: www.ia.omron.com**

***Regional Headquarters***
**OMRON EUROPE B.V.**
Wegalaan 67-69, 2132 JD Hoofddorp
The Netherlands
Tel: (31)2356-81-300/Fax: (31)2356-81-388

**OMRON ELECTRONICS LLC**
2895 Greenspoint Parkway, Suite 200
Hoffman Estates, IL 60169 U.S.A.
Tel: (1) 847-843-7900/Fax: (1) 847-843-7787

**OMRON ASIA PACIFIC PTE. LTD.**
No. 438A Alexandra Road # 05-05/08 (Lobby 2),
Alexandra Technopark,
Singapore 119967
Tel: (65) 6835-3011/Fax: (65) 6835-2711

**OMRON (CHINA) CO., LTD.**
Room 2211, Bank of China Tower,
200 Yin Cheng Zhong Road,
PuDong New Area, Shanghai, 200120, China
Tel: (86) 21-5037-2222/Fax: (86) 21-5037-2200

**Authorized Distributor:**

© OMRON Corporation 2021 All Rights Reserved.
In the interest of product improvement,
specifications are subject to change without notice.

**Cat. No. W623-E2-01** 0421